JVC

SERVICE MANUAL

DIGITAL S VIDEO CASSETTE RECORDER

BR-D85U

DIGITAL S

SPECIFICATIONS

GENERAL

Format	: Digital S
Tape width	: 12.65 mm
Tape speed	: 57.737 mm/sec
Signal format	: NTSC standard
Dimensions	: 429 (W) x 188 (H) x 567 (D) mm
Weight	: Approx. 25 kg
Power consumption	: Approx. 175 W
Power supply	: AC 120 V 50/60 Hz
Record/Play time (w/DS-104)	: (Record/Play) Approx. 104 min.
REW/FF time (w/DS-104)	: Approx. 3 min.
Operating temperature	5 to 40°C
Storage temperature	–20 to 60°C
Operating humidity	30% to 80%RH

VIDEO SIGNAL

Input	Composite	: 1 Vpp 75 ohms, unbalanced
	YC 358	Y:1Vp-p/C:0.286 Vp-p 75 ohms, unbalanced
	Component	Y:1Vp-p/R-Y, B-Y:0.7 Vp-p 75 ohms,
	Serial digital	unbalanced
		Conformity with SMPTE259M 75 ohms, unbalanced 270Mb/sec
Output	Composite	: 1Vp-p 75 ohms, unbalanced
	YC 358	Y:1Vp-p /C:0.286 Vp-p 75 ohms, unbalanced
	Component	Y:1Vp-p /R-Y, B-Y:0.7 Vp-p 75 ohms,
	Serial digital	unbalanced
		Conformity with SMPTE259M
		800mVp-p ±10%
		75 ohms, unbalanced 270Mb/sec
External sync input		: 0.286 Vp-p, 75 ohms, unbalanced
Sampling frequency		: Y: 13.5 MHz, R-Y/B-Y: 6.75 MHz
Quantization		8 bits
Frequency range		: Y:0 to 4.0 MHz + 1.0 dB/–1.5 dB (analog component in/out)
		R-Y/B-Y: 0 to 2 MHz + 1.0 dB/– 1.5 dB
S/N		: More than 50 dB (analog composite in/out)
		More than 52 dB (analog component in/out)
		More than 55 dB (digital in/analog component out)

AUDIO SIGNAL

Input	Line input	: –6/+4 dBs high impedance, balanced
	Digital audio	Conformity with AES/EBU 1Vp-p
		75 ohms, unbalanced
Output	Line output	: –6/+4 dBs low impedance, balanced
	Digital audio	Conformity with AES/EBU 1Vp-p
		75 ohms, unbalanced
	Monitor output	: –6 dBs low impedance, unbalanced
	Headphone	∞ to –17 dBs, 8 ohms
Sampling frequency		: 48 kHz
Quantization		16 bits
No. of channels		: 2
Frequency response		: 20 Hz to 20 kHz
Dynamic range		: 85 dB or more
Wow & Flutter		: Below a measurable value

TIMER CODE (LTC)

Input	: 0 ± 6 dBs high impedance unbalanced
Output	: 0 ± 3 dBs low impedance unbalanced

ACCESSORIES : Power cable x 1

Design and specifications subject to change without notice.

This product is a controlled product under the Japanese Export Laws. You are kindly requested to obtain prior approval from your government authorities when exporting this product. In should be noted that it may be unlawful to re-record pre-recorded tapes, records, or discs without the consent of the owner of copyright in the sound or video recording, broadcast or cable program and in any literary, dramatic, musical or artistic work embodied therein.

No. 9326
June 1996

COPYRIGHT © 1996 VICTOR COMPANY OF JAPAN, LTD.

TABLE OF CONTENTS

Important Safety Precautions

INSTRUCTIONS

Sec. 1 SERVICE CAUTIONS AND DISASSEMBLY

Sec. 2 MECHANISM ADJUSTMENT

Sec. 3 ELECTRICAL ADJUSTMENT

Sec. 4 DIAGRAMS AND CIRCUIT BOARDS

Sec. 5 EXPLODED VIEWS AND PARTS LIST

Sec. 6 ELECTRICAL PARTS LIST

Sec. 7 REPACKING

Sec. 8 CIRCUIT DESCRIPTION

Important Safety Precautions

Prior to shipment from the factory, JVC products are strictly inspected to conform with the recognized product safety and electrical codes of the countries in which they are to be sold. However, in order to maintain such compliance, it is equally important to implement the following precautions when a set is being serviced.

● Precautions during Servicing

1. Locations requiring special caution are denoted by labels and inscriptions on the cabinet, chassis and certain parts of the product. When performing service, be sure to read and comply with these and other cautionary notices appearing in the operation and service manuals.

2. Parts identified by the ⚠ symbol and shaded (▒) parts are critical for safety.
   Replace only with specified part numbers.
   Note: Parts in this category also include those specified to comply with X-ray emission standards for products using cathode ray tubes and those specified for compliance with various regulations regarding spurious radiation emission.

3. Fuse replacement caution notice.
   Caution for continued protection against fire hazard.
   Replace only with same type and rated fuse(s) as specified.

4. Use specified internal wiring. Note especially:
   1) Wires covered with PVC tubing
   2) Double insulated wires
   3) High voltage leads

5. Use specified insulating materials for hazardous live parts. Note especially:
   1) Insulation Tape
   2) PVC tubing
   3) Spacers
   4) Insulation sheets for transistors
   5) Barrier

6. When replacing AC primary side components (transformers, power cords, noise blocking capacitors, etc.) wrap ends of wires securely about the terminals before soldering.

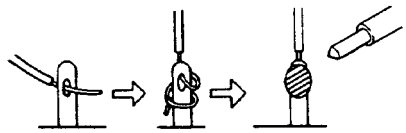

Fig. 1

7. Observe that wires do not contact heat producing parts (heat-sinks, oxide metal film resistors, fusible resistors, etc.)

8. Check that replaced wires do not contact sharp edged or pointed parts.

9. When a power cord has been replaced, check that 10–15 kg of force in any direction will not loosen it.

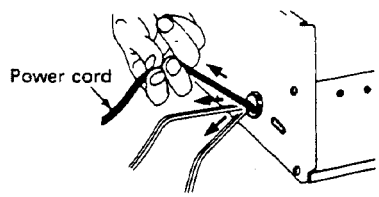

Fig. 2

10. Also check areas surrounding repaired locations.

11. Products using cathode ray tubes (CRTs)
    In regard to such products, the cathode ray tubes themselves, the high voltage circuits, and related circuits are specified for compliance with recognized codes pertaining to X-ray emission. Consequently, when servicing these products, replace the cathode ray tubes and other parts with only the specified parts. Under no circumstances attempt to modify these circuits. Unauthorized modification can increase the high voltage value and cause X-ray emission from the cathode ray tube.

12. Crimp type wire connector
    In such cases as when replacing the power transformer in sets where the connections between the power cord and power transformer primary lead wires are performed using crimp type connectors, if replacing the connectors is unavoidable, in order to prevent safety hazards, perform carefully and precisely according to the following steps.
    1) **Connector part number** : E03830-001
    2) **Required tool** : Connector crimping tool of the proper type which will not damage insulated parts.
    3) **Replacement procedure**
       (1) Remove the old connector by cutting the wires at a point close to the connector.
       Important : Do not reuse a connector (discard it).

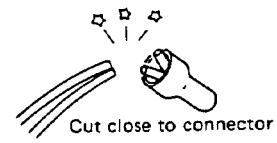

Fig. 3

(2) Strip about 15 mm of the insulation from the ends of the wires. If the wires are stranded, twist the strands to avoid frayed conductors.

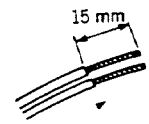

Fig. 4

(3) Align the lengths of the wires to be connected. Insert the wires fully into the connector.

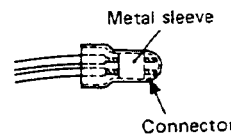

Fig. 5

(4) As shown in Fig. 6, use the crimping tool to crimp the metal sleeve at the center position. Be sure to crimp fully to the complete closure of the tool.

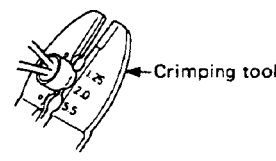

Fig. 6

(5) Check the four points noted in Fig. 7.

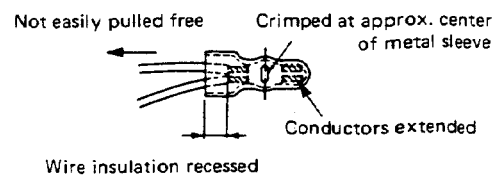

Fig. 7

● Safety Check after Servicing

Examine the area surrounding the repaired location for damage or deterioration. Observe that screws, parts and wires have been returned to original positions, Afterwards, perform the following tests and confirm the specified values in order to verify compliance with safety standards.

1. **Insulation resistance test**
   Confirm the specified insulation resistance or greater between power cord plug prongs and externally exposed parts of the set (RF terminals, antenna terminals, video and audio input and output terminals, microphone jacks, earphone jacks, etc.). See table 1 below.

2. **Dielectric strength test**
   Confirm specified dielectric strength or greater between power cord plug prongs and exposed accessible parts of the set (RF terminals, antenna terminals, video and audio input and output terminals, microphone jacks, earphone jacks, etc.). See table 1 below.

3. **Clearance distance**
   When replacing primary circuit components, confirm specified clearance distance (d), (d') between soldered terminals, and between terminals and surrounding metallic parts. See table 1 below.

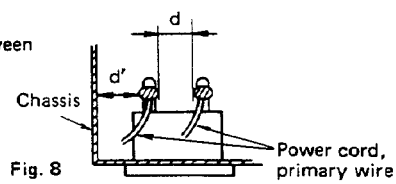

Fig. 8

4. **Leakage current test**
   Confirm specified or lower leakage current between earth ground/power cord plug prongs and externally exposed accessible parts (RF terminals, antenna terminals, video and audio input and output terminals, microphone jacks, earphone jacks, etc.).
   Measuring Method: (Power ON)
   Insert load Z between earth ground/power cord plug prongs and externally exposed accessible parts.
   Use an AC voltmeter to measure across both terminals of load Z. See figure 9 and following table 2.

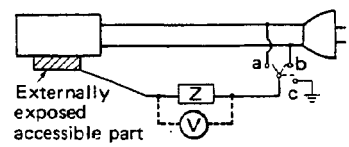

Fig. 9

5. **Grounding (Class I model only)**
   Confirm specified or lower grounding impedance between earth pin in AC inlet and externally exposed accessible parts (Video in, Video out, Audio in, Audio out or Fixing screw etc.).
   Measuring Method:
   Connect milli ohm meter between earth pin in AC inlet and exposed accessible parts. See figure 10 and grounding specifications.

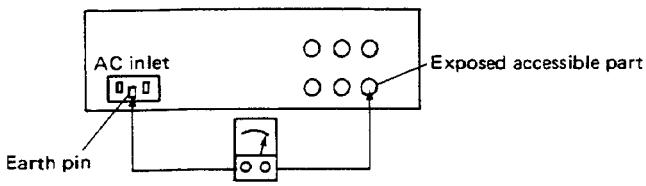

Fig. 10

Grounding Specifications

Region	Grounding Impedance (Z)
USA & Canada	Z ≦ 0.1 ohm
Europe & Australia	Z ≦ 0.5 ohm

AC Line Voltage	Region	Insulation Resistance (R)	Dielectric Strength	Clearance Distance (d), (d')
100 V	Japan	R ≧ 1 MΩ/500 V DC	AC 1 kV 1 minute	d, d' ≧ 3 mm
100 to 240 V			AC 1.5 kV 1 minute	d, d' ≧ 4 mm
110 to 130 V	USA & Canada	–	AC 900 V 1 minute	d, d' ≧ 3.2 mm
110 to 130 V 200 to 240 V	Europe & Australia	R ≧ 10 MΩ /500 V DC	AC 3 kV 1 minute (Class II) AC 1.5 kV 1 minute (Class I)	d ≧ 4 mm d' ≧ 8 mm (Power cord) d' ≧ 6 mm (Primary wire)

Table 1 Specifications for each region

AC Line Voltage	Region	Load Z	Leakage Current (i)	a, b, c
100 V	Japan	1 kΩ	i ≦ 1 mA rms	Exposed accessible parts
110 to 130 V	USA & Canada	0.15 μF, 1.5 kΩ	i ≦ 0.5 mA rms	Exposed accessible parts
110 to 130 V 220 to 240 V	Europe & Australia	2 kΩ	i ≦ 0.7 mA peak i ≦ 2 mA dc	Antenna earth terminals
		50 kΩ	i ≦ 0.7 mA peak i ≦ 2 mA dc	Other terminals

Table 2 Leakage current specifications for each region

Note: These tables are unofficial and for reference only. Be sure to confirm the precise values for your particular country and locality.

JVC®

VIDEO CASSETTE RECORDER

BR-D85U INSTRUCTIONS

DIGITAL S

BR-D85U

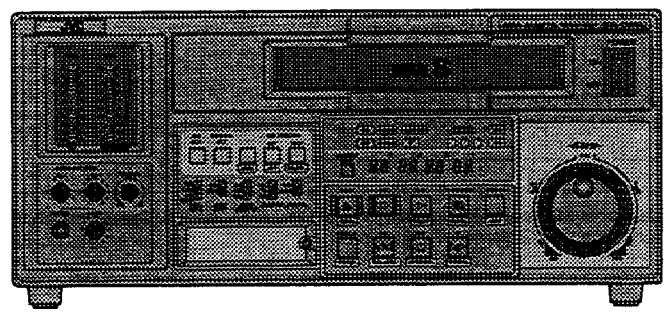

INTRODUCTION
CONTROLS, CONNECTORS AND DISPLAY
CONNECTIONS
MENU SWITCH SETTING
MENU SWITCH SETTING DETAILS
PREPARATION
RECORDING
PLAYBACK
EXTRA LINE RECORDING AND PLAYBACK
PRE READ
HOW TO USE TIME CODE
EDITING PHASE ADJUSTMENT
TROUBLE SHOOTING
APPENDIX
SPECIFICATIONS

For Customer Use:
Enter below the Serial No. which is located on the rear of cabinet. Retain this information for future reference.

Model No. BR-D85U

Serial No. _____

SL96064

SAFETY PRECAUTIONS

CAUTION: TO REDUCE THE RISK OF ELECTRIC SHOCK,
DO NOT REMOVE COVER (OR BACK).
NO USER-SERVICEABLE PARTS INDIDE.
REFER SERVICING TO QUALIFIED SERVICE PERSONNEL

The lightning flash with arrowhead symbol, within an equilateral triangle, is intended to alert the user to the presence of uninsulated "dangerous voltage" within the product's enclosure that may be of sufficient magnitude to constitute a risk of electric shock to persons.

The exclamation point within an equilateral triangle is intended to alert the user to the presence of important operating and maintenance (servicing) instructions in the literature accompanying the appliance.

WARNING:
TO PREVENT FIRE OR SHOCK HAZARD, DO NOT EXPOSE THIS APPLIANCE TO RAIN OR MOISTURE.

This unit should be used with 120 V AC only.

CAUTION:
To prevent electric shocks and fire hazards, do NOT use any other power source.

NOTE:
The rating plate (serial number plate) is on the rear of the unit.

INFORMATION
This equipment has been tested and found to comply with the limits for a Class A digital device, pursuant to Part 15 of the FCC Rules. These limits are designed to provide reasonable protection against harmful interference when the eqipment is operated in a commercial environment. This equipment generates, uses, and can radiate radio frequency energy and, if not installed and used in accordance with the instruction manual, may cause harmful interference to radio communications.
Operation of this eqipment in a residential area is likely to cause harmful interference in which case the user will be required to correct the interference at his own expense.

CAUTION
CHANGES OR MODIFICATIONS NOT APPROVED BY JVC COULD VOID USER'S AUTHORITY TO OPERATE THE EQUIPMENT.

This Class A digital apparatus meets all requirements of the canadian Interference-Causing Eqipment Regulations.

ATTENTION: POUR EVITER TOUT RISQUE D'ELECTROCUTION
NE PAS OUVRIR LE BOITER.
AUCUNE PIECE INTERIEURE N'EST
A REGLER PAR L'UTILISATEUR.
SE REFERER A UN AGENT QUALIFIE EN CAS DE PROBLEME.

Le symbole de l'éclair à l'intérieur d'un triangle équilatéral est destiné à alerter l'utilisateur sur la présence d'une "tension dangereuse" non isolée dans le boîtier du produit. Cette tension est suffisante pour provoquer l'électrocution de personnes.

Le point d'exclamation à l'intérieur d'un triangle équilatéral est destiné à alerter l'utilisateur sur la présence d'opérations d'entretien importantes au sujet desquelles des renseignements se trouvent dans le manuel d'instructions.

*Ces symboles ne sont utilisés qu'aux Etats-Unis.

AVERTISSEMENT:
POUR EVITER LES RISQUES D'INCENDIE OU D'ELECTROCUTION, NE PAS EXPOSER L'APPAREIL A L'HUMIDITE OU A LA PLUIE.

Ce magnétoscope ne doit être utilisé que sur du courant alternatif en 120 V.

ATTENTION:
Afin d'éviter tout resque d'incendie ou d'électrocution, ne pas utiliser d'autres sources d'alimentation électrique.

REMARQUE:
La plaque d'identification (numéro de série) se trouve sur le panneau arrière de l'appareil.

Cet appareil numérique de la classe A respecte toutes les exigences du Reglement sur le matériel brouilleur du Canada.

Thank you for purchasing the BR-D85U DIGITAL S video cassette recorder with electronic editing capabilities.

DIGITAL S

This video cassette recorder uses the DIGITAL S format. It can only be used with video tape cassettes bearing the "DIGITAL S" logo.

- It may be unlawful to use any material recorded from TV broadcast programs or pre-recorded programs without the consent of the owner of copyright, except in cases where this material is recorded exclusively for personal use.

This product is a controlled product under the Japanese Export Laws. You are kindly requested to obtain prior approval from your government authorities when exporting this product.

MAIN FEATURES

- Superb picture quality achieved by the DIGITAL S format using 4:2:2 component digital processing
- 2-channel PCM high-quality sound with 16-bit 48 kHz sampling
- High-density metal tape based on the W-VHS format
- Built-in time code generator/reader to enable recording and reading of SMPTE-Standard time code and user bits.
- Pre-read function
  This newly added function makes it possible to execute A/B roll editing using only one player.(Video insert only)
- Compact size, light weight, and low power consumption
  make DIGITAL S comparable to analog VCRs in terms of operability
- Complete analog interface with input/output terminals for composite, Y/C, color difference component and analog audio signals included as standard .
- Serial digital interface
  A serial digital signal input/output connector is provided as standard. This facilitates configuration of a fully digital system.
- Jog/search dial provided on the front panel for direct jog/search capability
- Built-in noiseless slow playback facility for noiseless playback in the speed range between approximately -0.3 and +0.3
- Monitor facility for search audio
  The DIGITAL S format provides two channels of linear track, enabling audio monitoring even during video shuttle search.
- Assemble/insert editing with appropriate editing controller connected for frame-by-frame editing and time code editing.
- Frame-by-frame recording and editing
  using intra-frame data compression

CONTENTS

1 INTRODUCTION 5
- 1-1 Outline 5
- 1-2 Precautions 6
- 1-3 Video Cassette 7
- 1-4 Head Cleaning 7

2 CONTROLS, CONNECTORS AND DISPLAYS 8
- 2-1 Front Panel 8
- 2-2 Rear Panel 13
- 2-3 Display 15

3 CONNECTIONS 17
- 3-1 Video Signal 17
- 3-2 Audio Signal 18
- 3-3 Editing 19

4 MENU SWITCH SETTING 20
- 4-1 Menu Display Modes 20
- 4-2 Menu Switch Setting 22
- 4-3 Saving and Calling Up Menu Switch Settings 23
- 4-4 Calling Up Functional Menu Switch 24
- 4-5 User Page Registration/Change/Delete . 25
- 4-6 Hou To Lock The Menu Switch Settings 28
- 4-7 Recording Current Adjustment 29
- 4-8 Hour Meter Data Display 30

5 MENU SWITCH SETTING DETAILS 31
- 5-1 Menu Switch List 31
- 5-2 Menu Switch Setting Content 32

6 PREPARATION 42
- 6-1 Operation Mode Lock 42
- 6-2 Standby ON/OFF 43
- 6-3 Loading and Unloading the Cassette 44

7 RECORDING 45
- 7-1 Preparation for Recording 45
- 7-2 Audio Record Level Adjustment 46
- 7-3 Basic Recording Operations 47
- 7-4 Audio Emphasis Function 48

8 PLAYBACK 49
- 8-1 Preparation for Playback 49
- 8-2 Basic Playback Operations 50
- 8-3 Manual Tracking Adjustment 51
- 8-4 Error Correction 52
- 8-5 Shuttle Search/Jog Operation 53
- 8-6 FF, REW and Counter Memory Function 54
- 8-7 Repeat Playback 54

9 VIDEO EXTRA LINE RECORDING AND PLAYBACK 55
- 9-1 Extra Line Data Recording 55
- 9-2 Extra Line Data Playback 56

10 PRE-READ FUNCTION 57
- 10-1 Editing with the pre-read function 57
- 10-2 Example of editing system configuration 58

11 HOW TO USE TIME CODE 59
- 11-1 Time Code Display 59
- 11-2 Time Code Initial Setting (Preset) 60
- 11-3 Time Code Recording 62
- 11-4 Time Code Playback 64
- 11-5 Sub Time Code Recording and Playback 65
- 11-6 Time Code Switch Setting for Editing 66

12 EDITING SYSTEM PHASE ADJUSTMENT 67
- 12-1 Connection 67
- 12-2 Unit-by-Unit Adjustment 68
- 12-3 Phase Adjustment 69

13 TROUBLESHOOTING 71
- 13-1 Warnings with Indicators 72
- 13-2 Troubles Not To Be Warned by Indicators 73

14 APPENDIX 74
- 14-1 Optional Accessories 74

15 SPECIFICATIONS 76

1 INTRODUCTION

1-1 OUTLINE

This manual consists of the following sections.

Section 1 INTRODUCTION
Carefully read this section as it describes the precautions to be taken when operating this unit and the type of cassette to be used.

Section 2 CONTROLS, CONNECTORS AND DISPLAYS
If you are already familiar with the operation of professional VCRs, you will probably only need to read this section to get started.

Section 3 CONNECTIONS
This section describes basic connections between the BR-D85U and other units.

Section 4 MENU SWITCH SETTING
This unit incorporates a "Menu" function which allows you to set a variety of switches on screen. Setting procedures and setting items are described in this section.

Section 5 MENU SWITCH SETTING DETAILS
This section describes in detail the menu switch items and setting contents.

Section 6 PREPARATION
This section describes how to set up the unit prior to operation and notes any precautions that need to be taken.

Section 7 RECORDING
This section describes recording operations and settings.

Section 8 PLAYBACK
This section describes playback operations and settings.

Section 9 VIDEO EXTRA LINE RECORDING AND PLAYBACK
This section describes how to record and play back a video signal on an external video line.

Section 10 PRE-READ FUNCTION
This section describes the pre-read function and provides an example of how an editing system using this function might be set up.

Section 11 HOW TO USE TIME CODE
This section describes time code presetting, recording, and time code playback operation.

Section 12 EDITING PHASE ADJUSTMENT
This section describes how to adjust the internal TBC phases.

Section 13 TROUBLESHOOTING
This section suggests ways to handle potential difficulties or malfunctions.

Section 14 APPENDIX
This section includes descriptions of optional units.

Section 15 SPECIFICATIONS

1-2 PRECAUTIONS

The BR-D85U incorporates highly sophisticated and complex technology. To ensure proper operation, be sure to take the following precautions.

Installation and storage

- Avoid using the unit in places subject to the following conditions:
  - extreme heat or cold
  - strong magnetic field
  - high humidity
  - dust and soil
  - vibrations
- Handle the unit carefully
  Do not block the ventilation openings, or place anything heavy on the unit. Do not put any foreign substance into the cassette loading slot.
- Use this unit in horizontal (flat position) only.
- Avoid violent shocks to the recording chassis during transportation. Remove the cassette tape from the unit for transportation.
- Avoid keeping tapes in Still or Record Pause mode for a long time as doing so may damage the tape.

Maintenance and cleaning

- Proper maintenance such as cleaning dust, adding oil or replacing parts is necessary to obtain optimum performance and a longer service life. Maintenance on a regular basis (once every 500 hours) is recommended. Total drum rotation hours can be checked with the on-screen display or the tape counter display (see page 30).
- When cleaning the cabinet, wipe it with soft cloth. Do not use benzene or thinner as these may deform or discolor the cabinet surface. To remove excessive dirt, clean the unit with a mild detergent diluted with water, then wipe it with dry cloth.

Condensation

- Do not use this unit immediately after moving it from a cold place to a warm place. This will cause water vapor to condense on the still cold video head drum and tape guides and may damage the tape and the VCR.

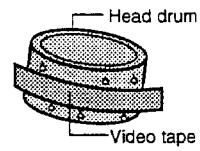

- When condensation occurs, the warning message "02 1" is shown on the tape counter display. The cassette is automatically ejected. (see page 69) The head drum then rotates automatically to dry itself. Leave the VCR in this state with the power on. Once the warning message "02 1" has turned off, operation can be resumed.

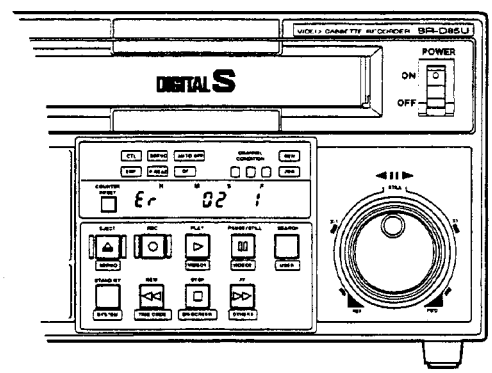

1-3 VIDEO CASSETTE

- Only cassettes bearing the "DIGITAL S" logo can be used with this VCR. Recording and playback time for usable cassettes are shown below.

Cassette	Recording/playback time
DS-104	Approx. 104 min.
DS-64	Approx. 64 min
DS-34	Approx. 34min.

- Cassettes bearing the S-VHS or VHS logo cannot be used with this unit. If an S-VHS or VHS cassette is inserted, it will be automatically ejected.
- Video cassettes cannot be used upside down.
- Leaving the tape in a partially wound condition for a long time may damage the tape. Rewind the tape to the beginning before storage.
- Tape performance cannot be maintained if a cassette is re-used 100 times or more. The more a tape is used, the more dropouts occur resulting in increased picture noise. Do not use tapes which have been frequently used or are damaged as doing so damage the rotary heads and shorten the service life of the VCR.

- Cassettes bearing the "DIGITAL S" logo on the back are provided with a safety slide to prevent accidental erasure.
- Move the slide to (△) to prevent erasure.
- Move the slide to (▽) REC to allow recording.

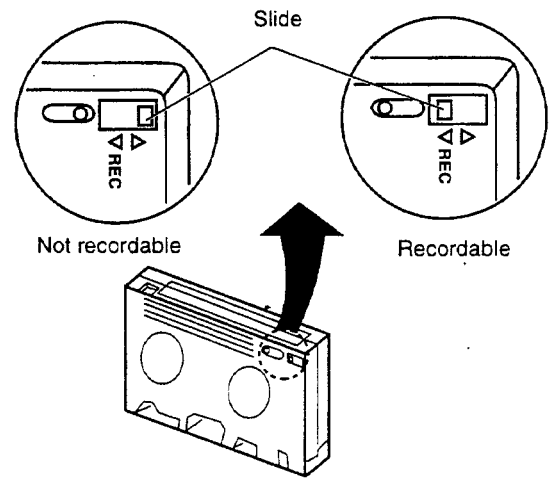

1-4 HEAD CLEANING

Repeated recording and playback leads to accumulation of dust and other particles on the video and audio heads. Excessive accumulation will adversely affect the picture or sound quality. Be sure to clean the tape transport system with a dedicated head cleaning tape.(optionally available DCL-5AU)
Use only a dedicated head cleaning tape. For details on use of the dedicated head cleaning tape, refer to the instructions provided it.

SECTION 2 CONTROLS, CONNECTORS AND DISPLAYS

2-1 FRONT PANEL

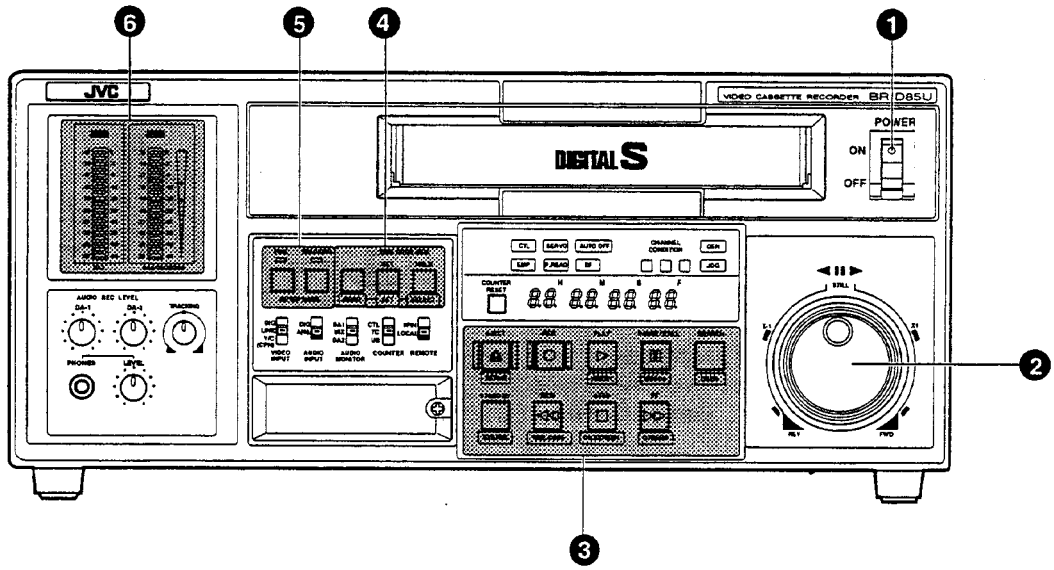

❶ [POWER] switch
When power is ON, the counter display is illuminated.

❷ Search/jog dials
Turn for search/jog operation.
- The outer dial serves as a search control.
- The inner dial serves as a jog control.

The jog dial is also used for selection of menu setting items and data setting in time code preset.

❸ Operation buttons

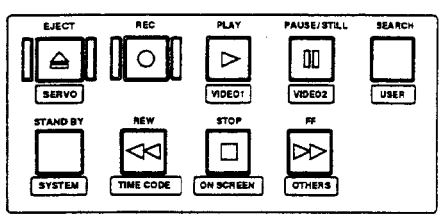

- All buttons are illuminated when pressed.
- The labels printed under the operation buttons indicate the menu items displayed when the button is pressed in the Menu Setting (Direct Access) mode.

[EJECT] button
- Press to eject the cassette.
- SERVO menu switch items are displayed when this button is pressed in the Menu Setting (Direct Access) mode.

[REC] button
- Starts recording when pressed with the [PLAY] button.
- To monitor the EE picture during playback, press and hold this button.
- To output EE signals in the Stop mode, press this button. Press the STOP button to cancel this (with menu switch No. 355 "PB/EE SEL STANDBY" set to "PB").

[PLAY] button
- Press to start playback. If pressed together with the [REC] button, recording will start.
- VIDEO menu switch items are displayed when this button is pressed in the Menu Setting (Direct access)mode.

[PAUSE/STILL] button
- Engages the Pause mode when pressed during recording. Press the [PLAY] button to resume recording.
- Engages the Still mode when pressed in the Play, Search or Stop (Standby On/Off) modes. Press the [PLAY] button to resume playback.
- TBC/FRAME MEMORY menu switch items are displayed when this button is pressed in the Menu Setting (Direct access) mode.

[SEARCH] button
- Starts search at the search speed set by the Search dial.
- Menu switch items registered in the User Menu are displayed when this button is pressed in the Menu Setting (Direct access) mode.
- During time code presetting, preset data can be changed by turning the Jog dial while keeping this button pressed.

2 CONTROLS, CONNECTORS AND DISPLAYS

2-1 FRONT PANEL

[STANDBY] button

- Switches the Standby mode between ON and OFF in the Stop mode. The button is illuminated in the Standby On mode.
- The head drum continues to rotate when the Standby mode is on. This enables the unit to rapidly switch modes when another function is engaged.
- The head drum does not rotate when the Standby mode is off. This protects the cassette tape and heads from damage.
- SYSTEM menu switch items are displayed when this button is pressed in the Menu Setting (Direct access) mode.

[STOP] button

- Press this button to stop any operation. The Output mode in this state can be selected with menu switch No. 355 "PB/EE SEL STANDBY".
- ON-SCREEN menu switch items are displayed when this button is pressed in the Menu Setting (Direct access) mode.

[REW] button

- Press this button to rewind the tape. The Output mode during rewind can be selected with menu switch No. 356 "PB/EE SEL FF/REW".
- TIME CODE menu switch items are displayed when this button is pressed in the Menu Setting (Direct access) mode.

[FF] button

- Press this button to fast-forward the tape. The Output mode during fast-forward state can be selected with menu switch No. 356 "PB/EE SEL FF/REW".
- The drum hour meter is displayed when this button is pressed in the Menu Setting (Direct access) mode.

❹ Time code generator/menu switch setting buttons

- These buttons are used to set both the time code generator and the menu switches. The labels above the buttons indicate the time code-related functions while those beneath the buttons indicate menu switch functions.

■ Time code generator setting

[HOLD] button

- Press this button to preset data in the time code generator. Time code is preset with the COUNTER switch set at TC and user bits with the COUNTER switch at UB.

* This button is effective only when the INT/EXT switch on the time code setting section is set to INT and the PRESET/REGEN switch to PRESET.

[SET] button

- Press this button after presetting data in the time code generator. Presetting is complete and the counter displays the counter data being read.

■ Menu switch setting

[MENU] button

- Press this button to enter the Menu Switch Setting mode.
  Press this button again to switch the Menu Switch Setting mode back to the Counter Display mode.

[SET] button

- Press this button to store menu switch setting data in the VCR's memory.

[SELECT] button

- Press this button to select the menu switch setting data.

❺ Meter mode select buttons

Use to select meter display items and display accuracy.

[TRACKING METER MODE] button

- Press this button to switch between DA-2 audio level meter and tracking meter.
  Tracking meter is displayed when the TRACKING indicator is illuminated.

[FINE METER MODE] button

- Press this button to change the display accuracy of the DA-1/DA-2 audio level meter.

When FINE indicator is illuminated, the meter display is in Fine mode. More precise level adjustment is possible in this mode.

❻ Level meter section

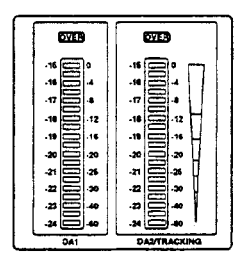

- Indicates the audio recording or playback levels. The DA2/TRACKING meter can be switched between tracking display and DA2 audio level display with the TRACKING METER MODE button.
  Audio Level Display mode can be selected with the FINE METER MODE button
  If the audio level is too high, the OVER mark is illuminated.

2 CONTROLS, CONNECTORS AND DISPLAYS

2-1 FRONT PANEL

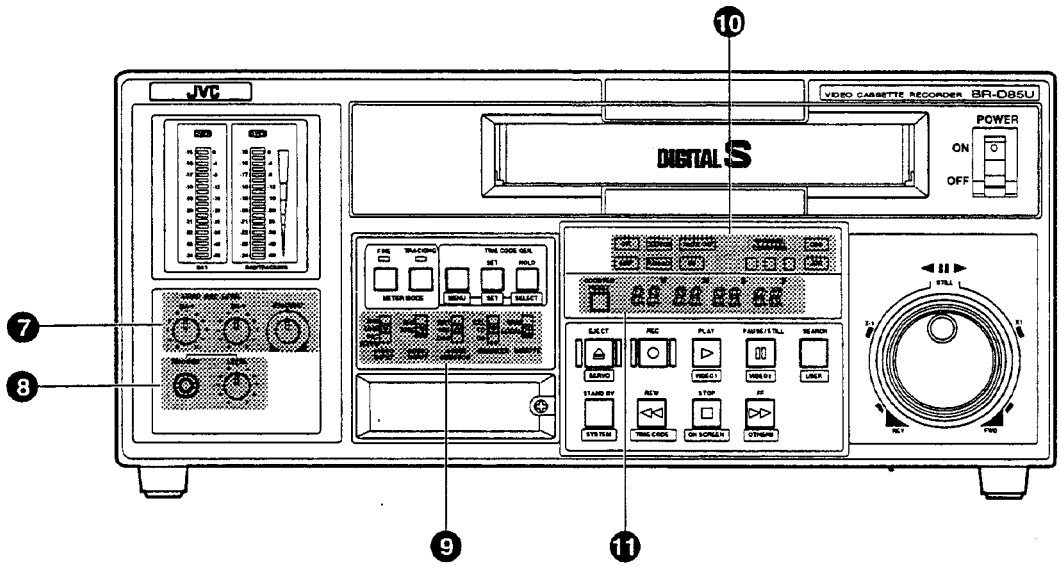

⑦ Analog audio recording level/tracking adjust knob

[AUDIO REC LEVEL] adjust knob

- Adjusts analog audio recording levels for each of DA1/DA2 channels. Turn the knob clockwise to raise the level and counterclockwise to lower it.

[TRACKING] adjust knob

- Manually adjusts tracking during playback. After setting the DA2/TRACKING meter set to Tracking Display mode with the TRACKING/ METER MODE button, adjust this knob until the needle swings to the maximum level.

* To manually adjust tracking, set menu switch No. 005 AUTO TRACKING to OFF (0).

⑧ Headphone section

[PHONES] jack

- Connect a set of headphones with a 6 mm-dia. plug to listen to the audio channel selected with the AUDIO MONITOR switch.

[LEVEL]control

- Adjusts signal level output from the PHONES jack.

⑨ Setting switch section

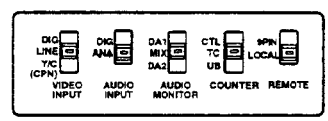

[REMOTE] select switch

To select between remote and local control of the VCR.

9 PIN: For remote control with the remote control unit connected to the rear panel 9-pin connector.
With this position selected, all VCR buttons other than STOP and EJECT are disabled.

LOCAL: For direct control with the front panel control buttons.
With this position selected, remote control is disabled.

[COUNTER] select switch

To select the Counter Display mode.

CTL: CTL (control) signals are displayed on the time counter.

TC: Time code signals are displayed on the time counter.

UB: User bits are displayed on the time counter.

* On the remote control unit, CTL display can be selected by setting the Counter Read mode to CTL. TC display can be selected by setting it to TC.

2 CONTROLS, CONNECTORS AND DISPLAYS

2-1 FRONT PANEL

[AUDIO MONITOR] select switch
To select the audio output for the AUDIO MONITOR OUT connector and the PHONES jack.

DA1: To monitor the DA1 channel signals.
MIX: To monitor the DA1 and DA2 signals together, in stereo for headphone monitoring.
DA2: To monitor the DA2 channel signals.

[AUDIO INPUT] select switch
To select an audio signal for recording.

DIG: For serial digital audio input
ANA: For analog audio input through the [AUDIO IN] connector.

[VIDEO INPUT] select switch
To select a video signal for recording.
DIG: For the serial digital video signal.

LINE: For the composite video signal through the [VIDEO LINE IN] connector.
Y/C (CPN): For the Y/C358 signal through the [VIDEO Y/C358 IN] or the component video signal through the [Y, R-Y, B-Y IN] connector.

* Select Y/C358 or component with menu switch No. 109 VIDEO INPUT.

⑩ LED indicator section

CTL **[CTL] control indicator**
- Lights during playback of a tape with no recorded control signals. The SERVO indicator goes out at the same time.

SERVO **[SERVO] lock indicator**
- Lights when the capstan and drum servos are locked to the reference signal during recording or playback.

AUTO OFF **[AUTO OFF] indicator**
- Lights when the unit malfunctions .

GEN **[GEN] genlock indicator**
- Lights when the unit is locked to the signal delivered to the rear panel [REF IN] connector.

EMP **[EMP] emphasis indicator**
- Lights when emphasis information is contained in playback digital audio signals.
- Lights when emphasis information is contained in input digital audio signals .

P.READ **[P.READ] pre-read indicator**
- This indicator lights when menu switch No. 351 PRE READ is set to ON (1) or a pre-read command is received from the 9-pin remote connector. The pre-read function is operative and the pre-read picture is output from the video output connector. For more details, refer to page 57.

DF **[DF] drop frame indicator**
- Lights when recording or playing back in the Drop Frame mode.

JOG **[JOG] jog mode indicator**
- Lights in the Jog mode.

[CHANNEL CONDITION] indicator
- These indicators show the output level (Error-rate) of the video heads in the Play mode.

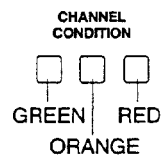

Green : Normal
Orange : Minor errors.
Red : Major errors. Normal playback is not possible.

* If the orange or red indicator lights continuously, adjust the tracking manually or clean the heads with a dedicated head cleaning tape. If three indicators blink at the same time, tracking adjustment is required. Adjust the tracking manually or by setting menu switch No. 005 "AUTO TRACKING" to ON.

⑪ Counter display section

[COUNTER RESET] button
- Press this button to reset the CTL counter to 0:00:00:00.

* Time codes and user bits cannot be reset.

Counter display
- Usually displays tape time. With the MENU button pressed, it displays menu switch setting and hour meter . Displays warning codes in the AUTO OFF state.

2 CONTROLS, CONNECTORS AND DISPLAYS

2-1 FRONT PANEL

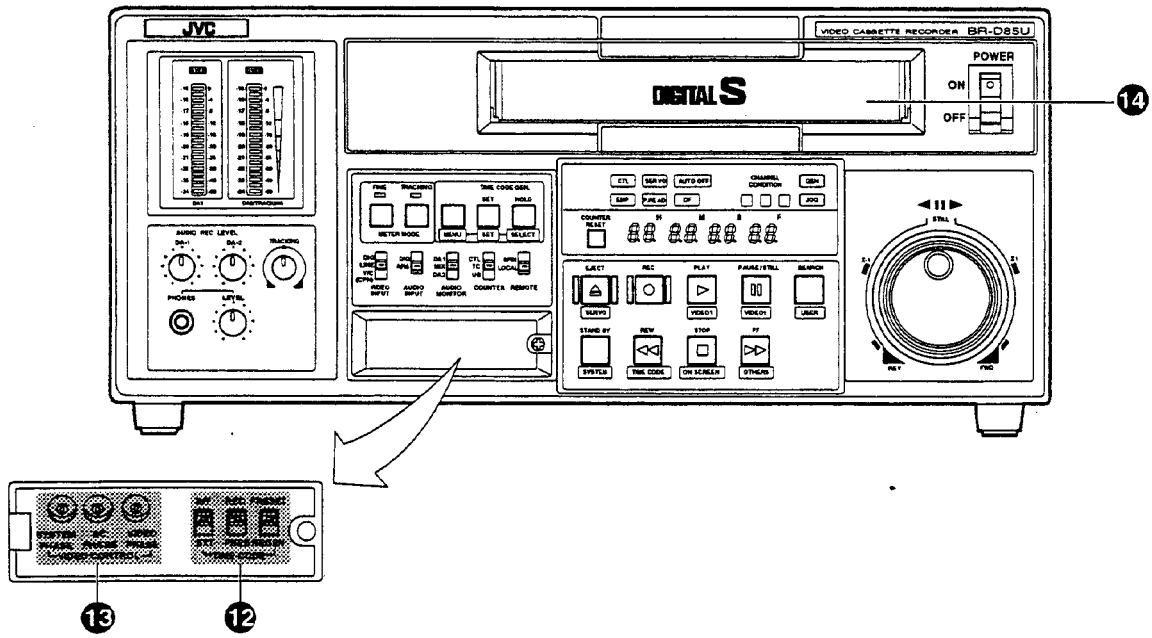

⑫ Time code setting switch section

Remove the front cover to perform setting.

[INT/EXT] time code select switch

- To select internal or external time code generation.

INT: To use the internal time code generator.

EXT: To use an external time code generator.This setting automatically engages the Free Run mode and the Regeneration mode.

[REC/FREE] Run mode select switch

- To select one of two Run modes available with the internal time code generator.

* Effective only when the PRESET/REGEN switch is set to PRESET and the INT/EXT switch to INT.

REC: Time code runs only during recording.

FREE: Time code runs in real time regardless of the VCR's operating mode. Select this position for editing.

[PRESET/REGEN] select switch

- To select the Internal Time Code Generator mode.

* Effective only when the INT/EXT switch to INT.

PRESET: Select this mode to preset time code data.

REGEN: Select this mode when using the internal time code generator in sync with playback time code signal.

⑬ Video control section

Use these controls for editing with two or more players (such as A/B roll editing).

The phases of different video signals can be adjusted with these controls.

* Remove the front cover and adjust using a straight-slot screwdriver.

[SYSTEM PHASE] control

- Provides phase matching between the external sync signal and the video output signal.

[SC PHASE] control

- Provides subcarrier phase matching between the video output signal and the external sync signal.

[VIDEO PHASE] control

- Adjusts the video phase of the video output signal .

* Set menu switch No. 110 VIDEO PHASE to VARIABLE (1) for this adjustment.

⑭ Cassette loading slot

* S-VHS/VHS tape cannot be used for either recording or playback.

2-2 REAR PANEL

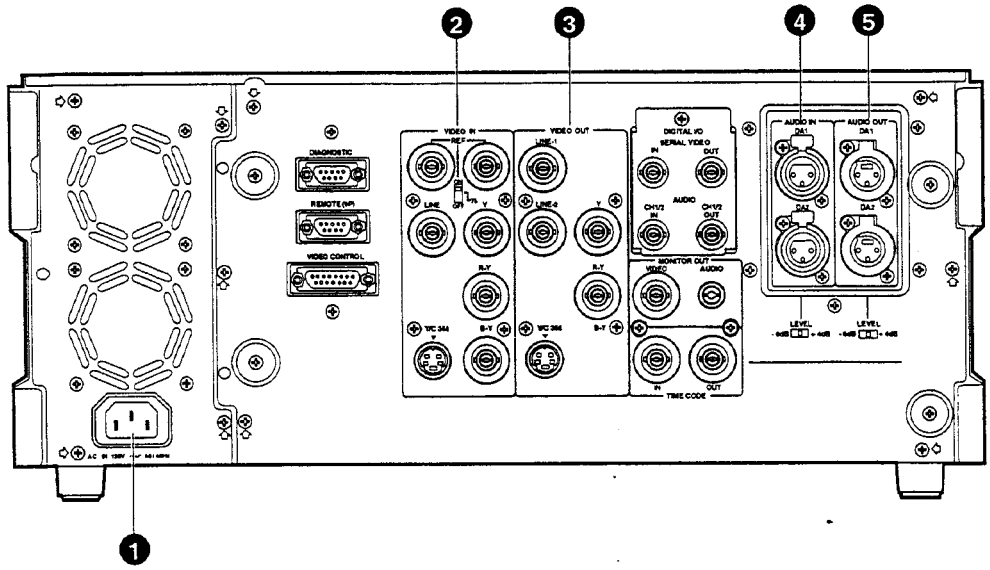

❶ [AC IN] socket
Connect to an AC power outlet via the provided power cable.

❷ Video input connector section

Video signals input to this unit should be passed through a TBC for optimum stability and minimum jitter.

■ **[REF IN] external sync signal input connector/ 75-ohm terminating switch (loop-through) BNC**
- Receives the external reference sync signal. Because of its loop-through design, this connector can distribute signals to other units through the other terminal. Set the terminating switch to OFF when distributing signals. If signal distribution is not desired or is terminated at this unit, set the switch to ON.
- Do not use input signals with a level exceeding 1Vp-p (75 ohms terminated).
  * When setting up an A/B roll editing system, be sure to input a black burst or standard color signal to ensure that the [GEN] indicator is lit.

■ **[LINE IN] connector....BNC**
- Receives the composite video signal.

■ **[Y/C 358 IN] input connector....4 pin**
- Receives the separate YC signal.
  * When recording a separate YC signal, set menu switch No. 109 VIDEO INPUT to Y/C (0).

■ **[Y.R-Y.B-Y IN] input connector BNC x 3**
- Receives the component signal. MII or Bcam can be selected with menu switch No. 104 COMPONENT LEVEL. Factory setting is MII.
  * When recording a component signal, set the menu switch No. 109 VIDEO INPUT to CPN (1).

❸ Video output connector section

■ **[LINE OUT] connector....BNC x 2**
- Outputs the composite video signal. The same signal is delivered through the [LINE-1] [LINE-2] connectors.

■ **[Y/C358 OUT] connector....4 pin**
- Outputs the separate YC signal.

■ **[Y.R-Y.B-Y. OUT] connector....BNC x 3**
- Outputs the component signal. MII or Bcam can be selected with menu switch No. 104 COMPONENT LEVEL. Factory setting is MII.

❹ Audio input connector section

■ **[AUDIO IN] connector XLR x 2**
- Receives the analog audio signal.

■ **[LEVEL] audio input level select switch**
- To select -6dB or +4dB according to the level of the audio input signal.

❺ Audio output connector section

■ **[AUDIO OUT] connector XLR x 2**
- Outputs the analog audio signal.

■ **[LEVEL] select switch**
- To select -6dB or +4dB according to the input level of connected audio equipment.

2-2 REAR PANEL

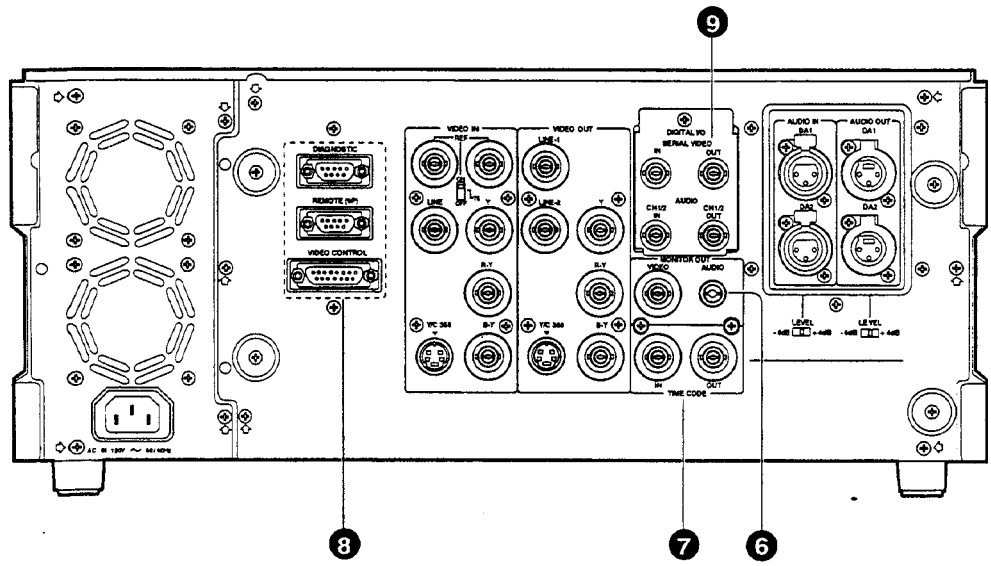

6 Monitor output connector section

■ **[VIDEO MONITOR OUT] connector BNC**

- Outputs the composite video signal. Time counter data and menu switch data can be shown on the screen of a monitor connected to this connector.

* On-screen display signals are delivered to this connector only.

■ **[AUDIO MONITOR OUT] connector RCA**

- Outputs the monaural audio signal selected with the front panel AUDIO MONITOR switch.

7 Time code connector section

■ **[TIME CODE IN] connector BNC**

- Receives the external time code signal. LTC time code conforming to the SMPTE standard can be received.
- LTC time code signals with a high level of jitter cannot be used. Be sure to use regenerated signals (stable signals which phase match video signals).

■ **[TIME CODE OUT] connector BNC**

- Outputs a time code signal to the external time code generator. LTC time code conforming to the SMPTE standard can be output.
- LTC time code is not output during Search unless menu switch No. 452 "SEARCH LTC" is set to "ON (1)".

8 Control connector section.

■ **[DIAGNOSTIC] connector D-SUB 9 pin**

- Used to diagnose malfunctions and for other service procedures.

■ **[REMOTE] connector D-SUB 9 pin**

- Connect to a remote editing control unit compatible with the RS-422 serial interface.

■ **[VIDEO CONTROL] connector D-SUB 15 pin**

- Used to adjust the built-in TBC. Connect to the optional RM-G22JX TBC remote controller.

9 [DIGITAL I/O] digital signal connector section

■ **[SERIAL VIDEO] connector for serial video signals ..... BNC x 2**

- Inputs/outputs serial video signals conforming to SMPTE 259M.

[IN]

- Serial digital video signals are input.

[OUT]

- Serial digital video signals are output.

■ **[AUDIO] connector for digital audio signals ..... BNC x 2**

- Inputs/outputs digital audio signals conforming to the digital audio interface standard (AES/EBU).

[IN CH1/2]

- Digital audio signals are input.Consumer digital audio signals cannot be recorded.

[OUT CH1/2]

- Digital audio signals are output.

2-3 DISPLAYS

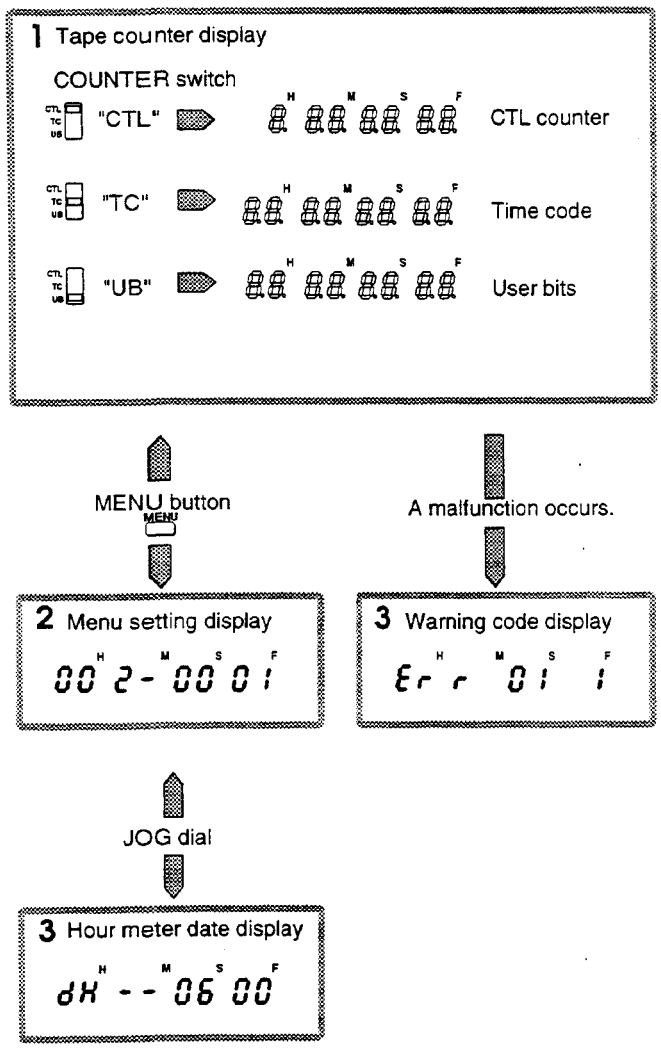

Counter Display

The counter display is switchable between the following four modes (see figures to the left).

1. Tape counter display

The display usually serves as a tape time counter (hours, minutes, seconds, frames). CTL counter, time code or user bits can be selected with the front panel COUNTER switch.
The Menu Setting Display mode is entered when the MENU button is pressed.

2. Menu setting display

To select menu functions and perform menu switch setting
Menu functions and menu switch items can be changed with the JOG dial. (See page 22) "Menu Switch Setting" for details.

- The counter display shows symbols and numerals. The on-screen display shows messages in characters.

Pressing the MENU button restores the Tape Counter Display mode.

3. Hour meter data display

The hour meter data (drum operation time) can be displayed in the Menu Setting Display mode.
(For detail,see page30.)

4. Warning code display

If a malfunction occurs, the corresponding warning code is automatically displayed.
(For detail,see page 71.)

How to reset the CTL counter

- Pressing the COUNTER RESET button resets the CTL counter to 0:00:00:00. Time codes and user bits cannot be reset.
- Ejecting the cassette tape also resets the CTL counter to 0:00:00:00.

2-3 DISPLAYS

1. Tape counter display

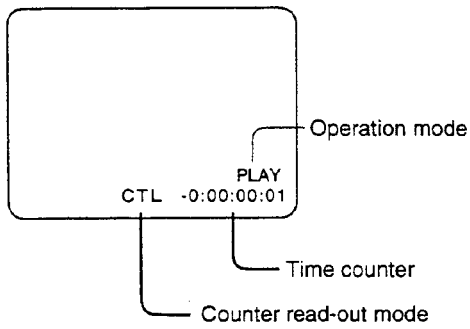

Counter mode

CTL : CTL data
TCR : Time code reader data
TCG : Time code generator data
UBR : User bits reader data
UBG : User bits generator data

TCR • : CTL interpolation mode

With menu switch No. 451 VITC OUT SELECT to SUB TC(0), sub timecode information is simultaneously displayed on a separate line.

SUB TC : SUB TC reader data

The symbol in the tape counter display changes when playing back a tape recorded in the Drop Frame mode.

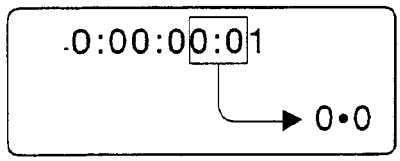

2. Menu setting display

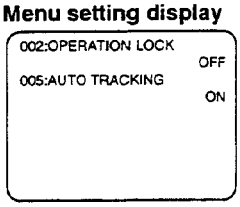

3. Hour meter data display

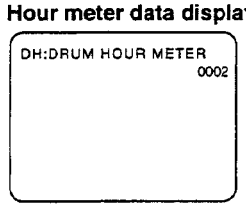

4. Warning code display

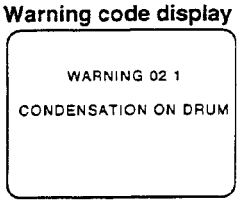

On-screen Display

On-screen information is available only via the rear panel VIDEO MONITOR OUT connector. Messages shown on the on-screen display correspond to the Counter Display items on page 15. (See the lefthand charts.)

1. Tape counter display

- Shows data when menu switch No. 500 ON-SCREEN DISPLAY is set to ON (1).
- You can choose what information is shown with menu switch No. 504 INFORMATION SELECT.
  Only time data are displayed when TIME (0) is selected.
  Both time data and the VCR operation mode are displayed when TIME + MODE (1) is selected.
- The display position can be shifted horizontally with menu switch No. 501 CHARA H POSITION and vertically with No. 502 CHARA V POSITION.
- Set menu switch No. 500 ON-SCREEN DISPLAY to OFF (0) to erase the on-screen display.

Note:
The time code data shown on the screen may not coincide exactly with the address data recorded on the tape (there is usually a slight delay). **To avoid problems in off-line editing, do not copy or use on-screen data from the MONITOR OUT connector when preparing a work tape.**

2. Menu setting display

Press the MENU button to call up the menu setting display on screen. Multiple items are displayed in the Character mode.

- Select a menu item by turning the JOG dial.
- Pressing the MENU button restores the (1) Tape counter display.

See page 22 for menu switch setting procedure.

3. Hour meter data display

Hour meter data can be displayed in the Menu Setting Display mode.
(For detail,see page 30.)

4. Warning code display

If a malfunction occurs, the corresponding warning code is automatically displayed.
(For detail,see page 71.)

Section 3 CONNECTIONS

3-1 VIDEO SIGNAL

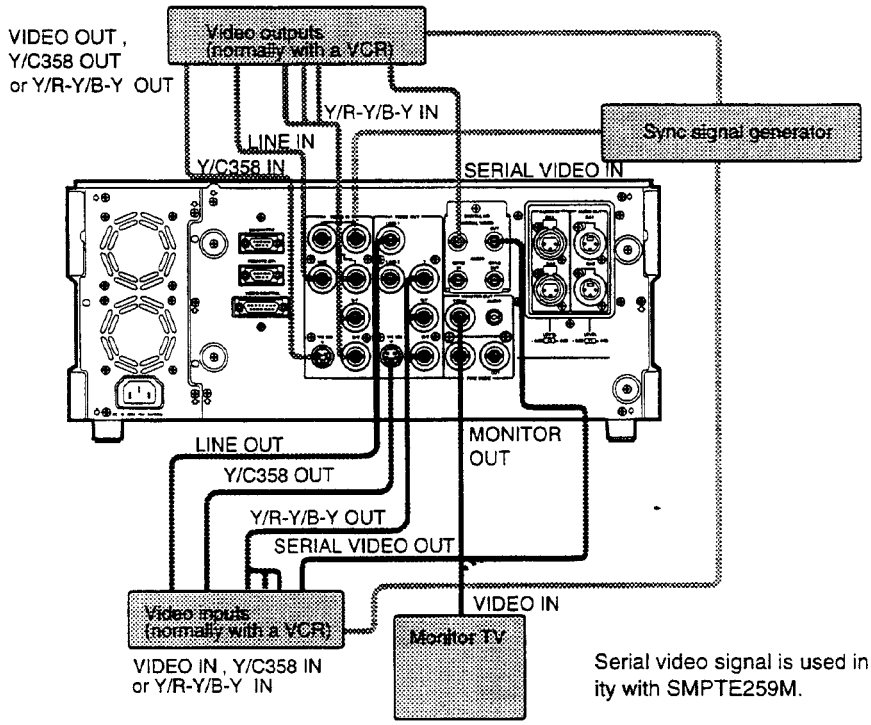

Serial video signal is used in conformity with SMPTE259M.

Connection to a monitor and video equipment

Because menu switch setting items and on-screen information described in the following section of this manual can only be output from the VIDEO MONITOR OUT connector, you should be sure to connect a monitor to this connector.

- To record a signal through the Y/R-Y/B-Y IN component input connector, set menu switch No. 109 VIDEO INPUT to CPN (1).
- To record signal through the VIDEO IN-Y/358 separate YC input connector, set menu switch No. 109 VIDEO INPUT to Y/C.
- The input or output level at the Y.R-Y.B-Y component iconnector can be selected with menu switch No. 104 COMPONENT LEVEL.
  LOW (0): MII VCR
  HIGH (1): Betacam VCR
- The same signal is delivered from both video output connectors LINE1 and LINE2.

Optional connection cables

The following cables are optionally available for Y/C 358 video signal connection.

Model	Connectors on connected units Output	Input	length
VC-G30U	4-pin	4-pin	3 m
VC-G50U	4-pin	4-pin	5 m
VC-G3030U	4-pin	7-pin	3 m
VC-G2030U	7-pin	4-pin	3 m
VC-G2050U	7-pin	4-pin	5 m

Connector configurations

Input connectors

VIDEO IN-LINE	BNC
VIDEO IN-Y/C358	4-pin S connector
Y.R-Y.B-Y IN	BNC
REF IN	BNC

Output connectors

VIDEO OUT-LINE	BNC
VIDEO OUT-Y/C358	4-pin S connector
Y.R-Y.B-Y OUT	BNC
REF OUT	BNC
VIDEO MONITOR OUT	BNC

3-2 AUDIO SIGNAL

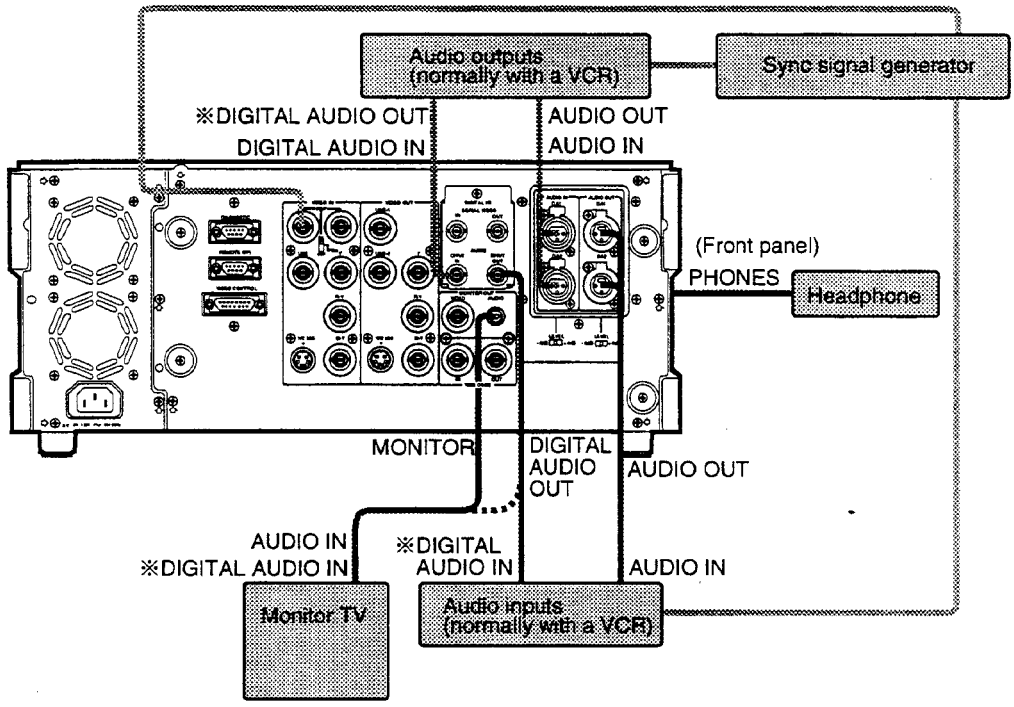

Connection to a monitor and audio equipment

The audio signal output from the AUDIO MONITOR OUT connector is monaural. Select the signal to be output with the front panel AUDIO MONITOR switch.

- Supply an analog signal before A/D conversion to the AUDIO IN connector.
- A D/A converted analog signal is output from the AUDIO OUT connector.
- Set the audio input and output level with the LEVEL switch.
- To synchronize audio and video signals when recording digital audio signals, input video signals to the digital audio equipment as well.
- Consumer digital audio signals cannot be recorded.

Connector configurations

Front panel

PHONES 6 mm dia. jack (stereo)

Rear panel

Input connector

AUDIO IN XLR (3p female)

Output connectors

AUDIO OUT XLR (3P male)

AUDIO MONITOR OUT RCA

Changing the digital audio output level

To allow conversion of digital audio signals into balanced signals for output, you can change the output level. To change the output level, follow the procedure below.

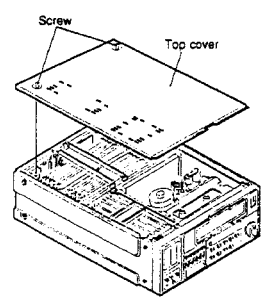

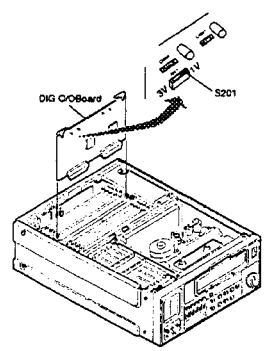

Procedure

1. Turn off the VCR's power.
2. Loosen the two screws shown in the figure at left and remove the top cover.

> Six lugs are installed in the chassis in areas in contact with the top cover. When removing the top cover, be careful not to remove these lugs as well.

3. With a screwdriver or similar tool, change the position of switch S201 on the DIG I/O board.
   - 1V: Set to this position to output unbalanced signals. (Factory setting)
   - 3V: Set to this position when connecting an adapter which converts digital audio signals to balanced signals.
4. Replace the top cover and secure it with the screws.

3 CONNECTIONS

3-3 EDITING

Connection example for cut editing.

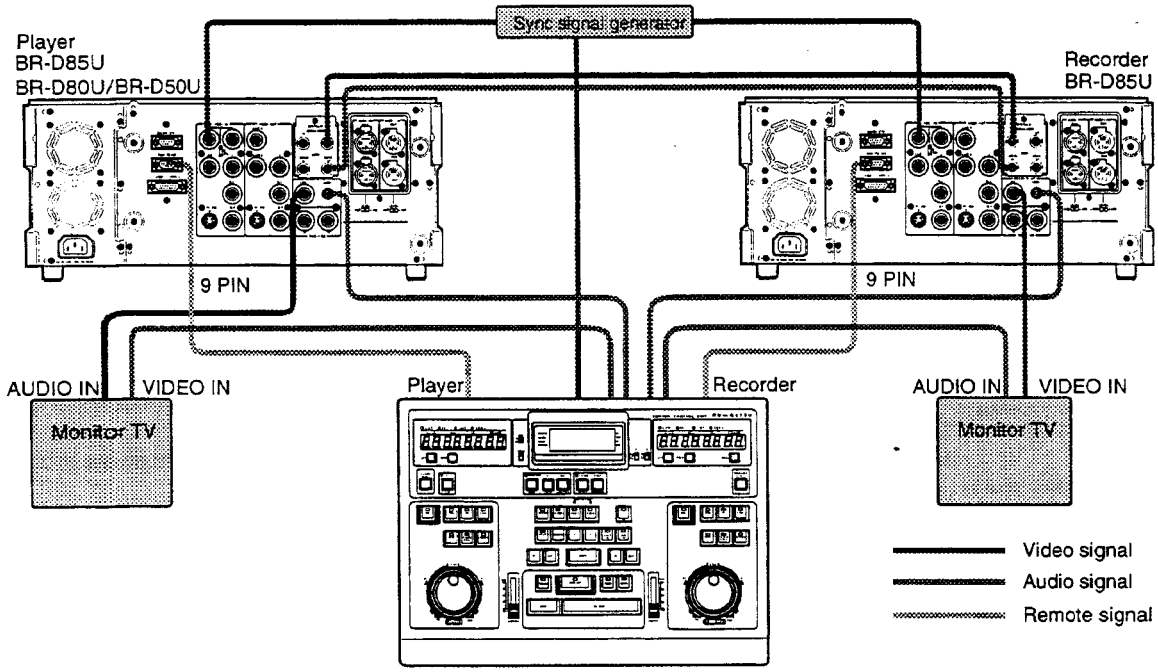

Editing controller RM-G820U

External sync signals

The servo system of this unit automatically selects one of the following reference signals.

1. Sync signal from the external sync signal input connector.
2. Sync signal from the sync signal generator in the VCR.

The reference signal is selected depending on whether or not an external sync signal is input as shown in the table below.

Presence of genlocking signal	Reference sync signal
Yes	Ext. sync
No	Int. sync

Video signals input to the LINE IN or Y/C358 IN or Y/R-Y/B-Y IN connector are not synchronized. To record video signals normally, a video signal genlocked with the external sync signal must be input.

- Use a composite signal (black burst or standard color signal) as an external sync signal.
- Because of the loop-through design of the REF IN connector, the signal can be distributed to other connected units. Set the 75-ohm terminating switch to OFF to enable signal distribution. If distribution is not required or the signal terminates at this unit, set the switch to ON.
- For a description of editing procedures, refer to the editing controller's operation manual.
- Use an editing controller compatible with the RS422 (9 pin) serial interface.
- For advanced editing, provide the individual units with external sync signals.
- If a sync signal generator is not available, input signals from the player's VIDEO LINE OUT to the editing controller and recorder.

- Edit points will deviate if the edit timing setting on the recording VCR is not the same as that on the editing controller. Set the editing controller's edit timing to -7 FRAME. Preroll time should be 5 seconds or more.
- When using the RM-G820U or the RM-G870U, remember to activate the controller's LEARN function. Otherwise, retries are required frequently.
- When the BR-D85U is used as a player ,set menu switch No.005 AUTO TRACKING to OFF or set the pre-roll time to 7 seconds or more.

Section 4 MENU SWITCH SETTING

Besides the physical switches on the unit, a selection of MENU switches are provided. These can be displayed on the counter display or a connected monitor. Data set in the MENU switches are stored in the VCR's built-in volatile memory and are not erased even when the main power is turned off.
Also available on the top menu display are the following convenient functions for menu switch setting.

- Storing and calling up the current menu switch setting
- Restoring the menu switches to the factory setting
- Calling up the Direct Access group of menu switches which are clustered by function (Direct Access facility)
- Erasing all registered contents on the User Page (User Page facility)

4-1 MENU DISPLAY MODES

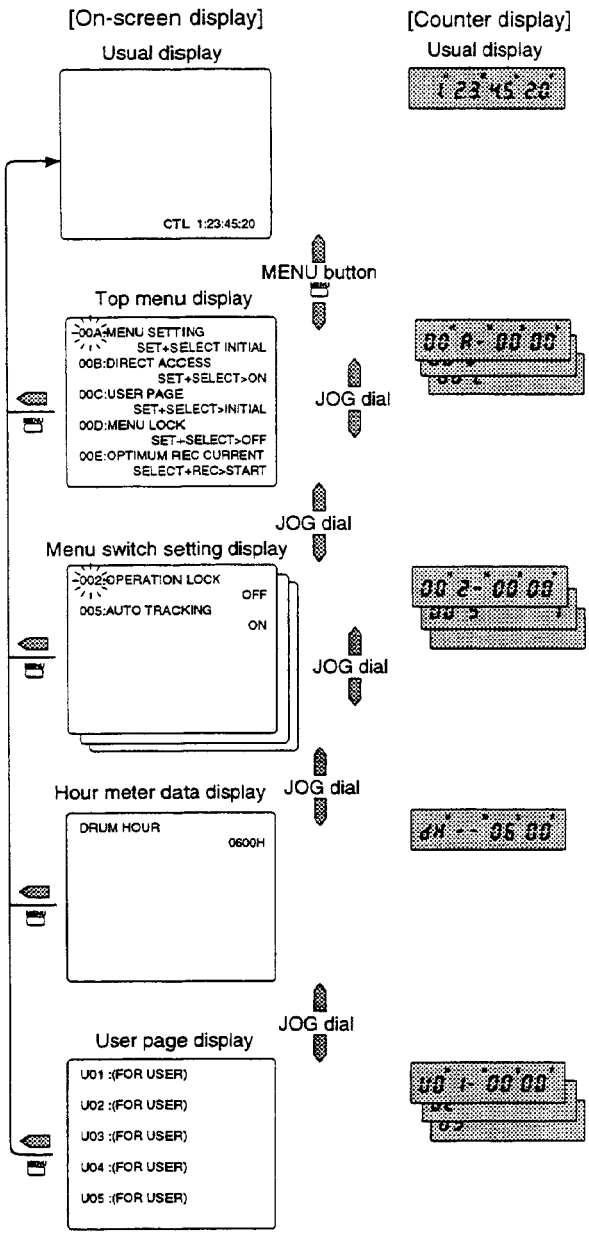

The menu display consists of four types of display modes.

- Press the MENU button to call up the menu screen. The starting items are shown on the counter display.The selected item blinks on the on-screen display.
- Turn the JOG dial to call up all four modes one after another.
- Press the MENU button to restore the usual display.

1 Top menu display

To select desired menu functions.

- **00A: MENU SETTING**
  - INITIAL(0) : Set the MENU switches to the factory settings.
  - USER LOAD (1) : Set the MENU switches to the stored settings in the user memory area.
  - USER SAVE (2) : To store the current menu switch setting in the user memory area.
- **00B DIRECT ACCESS (Direct Access facility)**
  With this switch set to ON (1), one-touch direct access to a functionally-related group of MENU switches such as SERVO and VIDEO or to the hour meter data or the Menu switches on user page is available simply by pressing with the specified button on the control panel.
- **00C USER PAGE (user page facility)**
  Erases all registered menu switch settings. To do this, select this menu function and press the SET and SELECT buttons simultaneously.
- **00D MENU LOCK function (menu lock facility)**
  Locks or unlocks menu switch settings.
  OFF (0): Settings can be changed.
  ON (1) : Locking function is activated and menu switch settings (except for the top menu) cannot be changed.
- **00E OPTIMUM REC CURRENT function (recording current automatic adjustment function)**
  To automatically adjust the recording current, select this menu function and press the SELECT and REC buttons simultaneously.
  For details, refer to "Recording current adjustment function" on page 29.

SECTION 4 MENU SWITCH SETTING

4-1 MENU DISPLAY MODES

[2] MENU switch setting display

To access multiple menu switch items
The menu switches are organized in six functionally related groups.

- SERVO numbered 000
- VIDEO numbered 100
- SYSTEM numbered 300
- TIME CODE numbered 400
- ON-SCREEN numbered 5 00
- TBC/FRAME MEMORY numbered 600

[3] Hour meter display

Shows the drum running hours.

[4] User page display

Shows the menu switch data registered on the user page.

4-2 MENU SWITCH SETTING

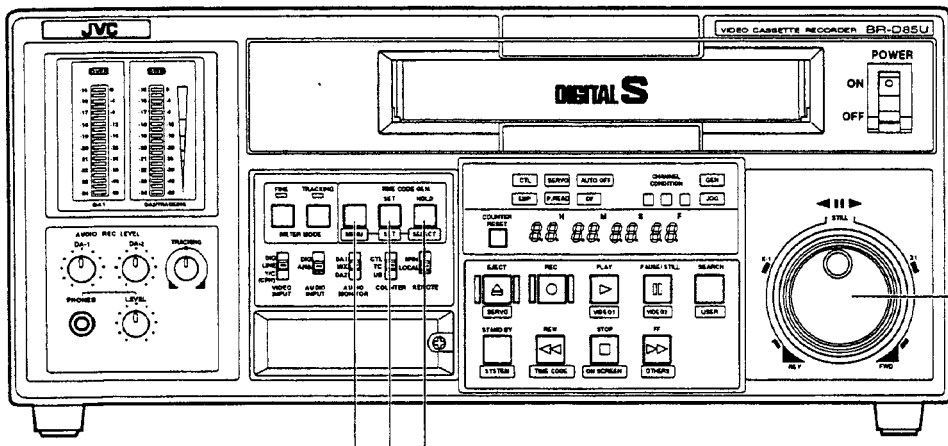

[Counter display]

[On-screen display]

Top menu display

```
00A:MENU SETTING
        SET+SELECT INITIAL
00B:DIRECT ACCESS
        SET+SELECT>ON
00C:USER PAGE
        SET+SELECT>INITIAL
00D:MENU LOCK
        SET+SELECT>OFF
00E:OPTIMUM REC CURRENT
        SELECT+REC>START
```

Menu switch No. Set value No.

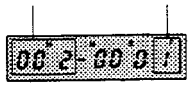

Menu switch setting display

```
002:OPERATION LOCK        OFF
005:AUTO TRACKING          ON
```

```
300:DIRECT EJECT          ON
301:DIRECT SEARCH         ON
302:BACK SPACE            ON
311:AUTO PLAY             OFF
312:AUTO REW              OFF
```

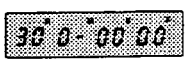

```
300:DIRECT EJECT          OFF
301:DIRECT SEARCH         ON
302:BACK SPACE            ON
311:AUTO PLAY             OFF
312:AUTO REW              OFF
```

Operation procedure

1. **Call up the menu switch setting display.**
   Press the menu button to call up the menu screen on the counter display and on-screen display. When the top menu is displayed, turn the [JOG] dial to show the menu switch setting screen.
   - On-screen display data are output through the rear panel [VIDEO MONITOR OUT] connector.

   The counter display shows menu switch number.
2. **Select a menu switch item to set by turning the JOG dial.**
   - The selected menu switch number blinks on the on-screen display.
   - The menu switch number changes on the counter display.
3. **Select the setting value of the menu switch with the SELECT button.**
   Repeat steps 2 and 3 to change other items.
4. **Press the SET button to enter the finalized settings in memory.**
   - During setting, "SET" blinks on the counter display and "MENU SET" blinks on the on-screen display. When setting is complete, the normal screen is restored.

4-3 SAVING AND CALLING UP MENU SWITCH SETTINGS

The set menu switch data can be saved and called up with the 00A MENU SETTING item on the top menu display.
If you're going to use the current menu switch setting again later, you can store it in the user memory area. Then, if the setting is changed, you can restore it simply by calling the stored user data.
It is also possible to restore the initial factory settings.

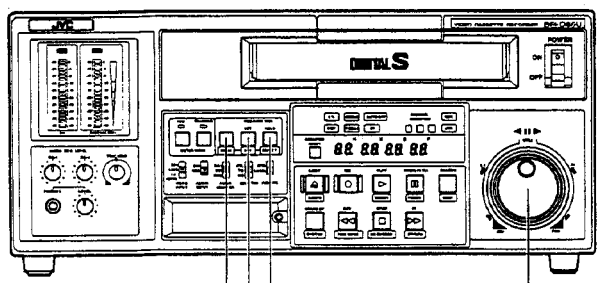

[Counter display] [On-screen display]

Top menu display

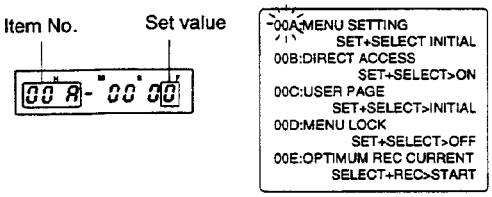

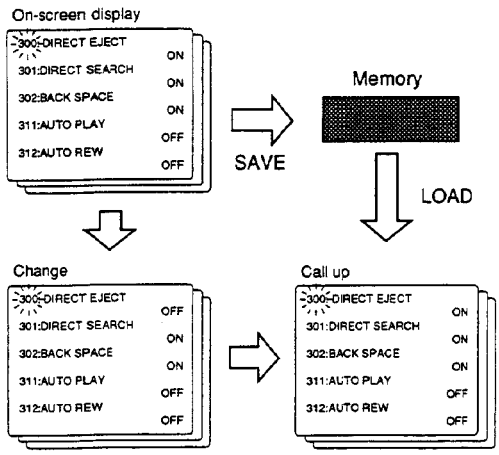

Operation procedure

1. Press the [MENU] button and turn the [JOG] dial to call up the top menu on the on-screen display and the counter display.

2. Select 00A: MENU SETTING.
- Turn the JOG dial so that 00A appears on the counter display and 00A blinks on the on-screen display.

3. Select the saving or calling-up function and execute it.

When restoring the initial factory settings

- Select INITIAL (0) with the SELECT button.
- Press the SELECT button while pressing the SET button.

→ Factory settings are restored.
→ The Normal Display mode is restored.

To call up the saved menu setting

- Select USER LOAD (1) with the SELECT button.
- Press the SELECT button while pressing the SET button.

→ The saved menu switch setting comes up.
→ The Normal Display mode is restored.

To save the current menu switch setting

- Select USER SAVE (2) with the SELECT button.
- Press the SELECT button while pressing the SET button.

→ The current menu setting is stored in the user memory area. The data already saved is updated.
→ The Normal Display mode is restored.

4-4 CALLING UP THE FUNCTIONAL MENU SWITCH (Direct Access facility)

The Direct Access facility groups menu switches into major functionally related groups such as SERVO and VIDEO for easier access. These groups can be called up directly on the menu display. Hour meter data and User Page menu switches can also be accessed this way.
The Direct Access function can be turned on or off with 00B DIRECT ACCESS on the top menu display.

Counter display

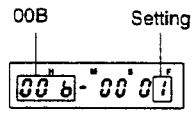

On-screen display

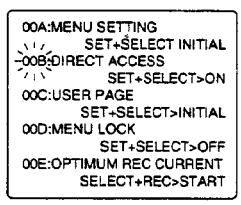

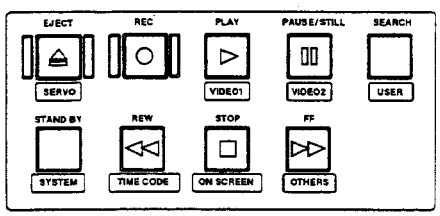

Access item	Control button	Information on display
SERVO menu SW	EJECT	Menu SW numbered 000
VIDEO menu SW	PLAY	Menu SW numbered 100
SYSTEM menu SW	STANDBY	Menu SW numbered 300
TC menu SW	REW	Menu SW numbered 400
ON-SCREEN menu SW	STOP	Menu SW numbered 500
TBC/Frame memory menu	STILL	Menu SW numbered 600
Hour meter	FF	Drum running hours
User menu SW	SEARCH	Menu switch on the user page

Procedure

Enabling the Direct Access function

1. **Press the [MENU] button and turn the [JOG] dial to call up the top menu on the on-screen display and the counter display.**
2. **Turn the JOG dial and select 00B DIRECT ACCESS.**
   - Turn the JOG dial so that 00B appears on the counter display and 00B blinks on the on-screen display.
3. **Select ON (1) with the SELECT button.**
4. **Press the SELECT button while pressing the SET button.**
   The Direct Access function is set to ON.
   = The Normal Display mode is restored.

To disable Direct Access, select OFF (0) with the SELECT button and press the SELECT button while pressing the SET button.

Using the Direct Access function

- Make sure the Direct Access function is set to ON.

1. **Press the MENU button to call up the menu setting display.**
2. **Press the corresponding front panel control button, depending on the item.**
   = The starting item is shown on the counter display and the first data appears on the on-screen display, depending on what has been selected.
   Move the items by turning the JOG dial.

The labels under the front panel control buttons indicate the functions that can be called up with the Direct Access facility.

4-5 USER PAGE REGISTRATION/CHANGE/DELETE (User page function)

Up to five menu switch settings can be registered on the user page (User Page function).
The User Page function allows you to register frequently used menu switches for quicker access when you want to change the settings.

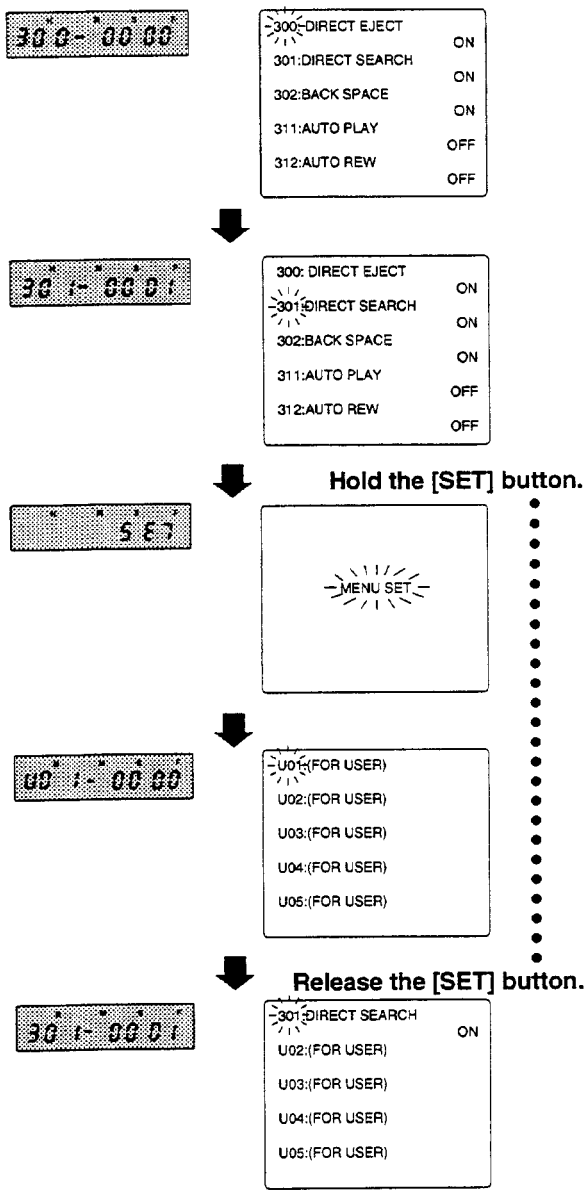

Procedure

Registering a menu switch on the User Page

1. **Call up the menu switch setting screen.**
   Press the [MENU] button.
   = Call up the menu screen on the counter display and on-screen display. When the top menu is displayed, turn the [JOG] dial to the menu switch setting screen.
2. **Turn the [JOG] dial to select the menu switch you want to register.**
   Menu switch selection is also possible using the "Direct access function".
3. **Press and hold the [SET] button.**
   During setting, "SET" blinks on the counter display and "MENU SET" blinks on the on-screen display.

   While still keeping the [SET] button pressed (even after the [SET] indication goes out), execute the next operation.
4. **After the [SET] indication disappears, turn the [JOG] dial to access the User Page screen.**
5. **Select the line you want to register on the User Page screen.**
   While keeping the [SET] button pressed, turn the [JOG] dial to select the line number (U01 - U05) you want to register.
   = The line number is displayed on the counter display; the line number blinks on the on-screen display.
6. **Release the [SET] button.**
   = The menu switch setting is displayed and the selected line is registered on the User Page.
7. **To register more items, repeat steps 2 through 6.**
   Registration of up to five items is possible.
8. **To end User Page registration, press the [MENU] button. The normal display will be restored.**

- When steps 2 through 6 are performed on an already registered line, the new menu switch setting replaces the original line.
- Registered lines on the User Page can be moved. Select the menu switch you want to move and follow steps 3 through 6.
- Items 00A to 00E on the top menu and the DH:DRUM HOUR menu switch cannot be registered on the User Page.

4-5 USER PAGE REGISTRATION/CHANGE/DELETE (User page function) (con't)

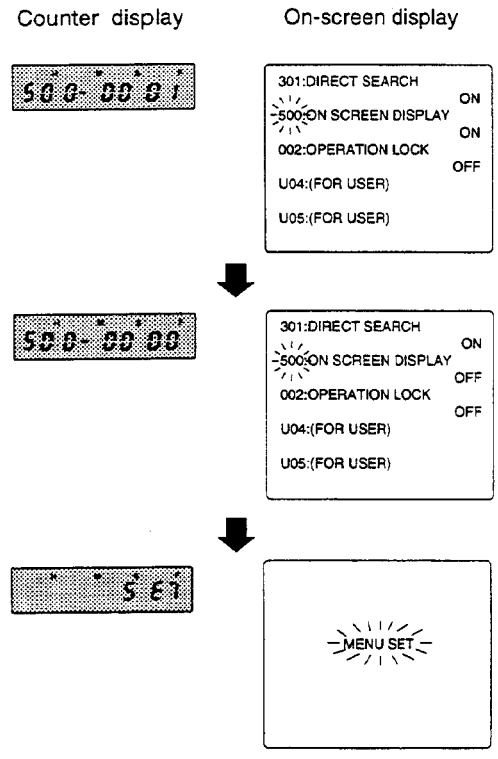

Procedure

Changing the registered menu switch setting

1. **Press the MENU button to call up the menu display mode.**
2. **Select the menu switch item to be changed with the JOG dial.**
   - The selected menu switch number blinks on the on-screen display.
   - The menu switch number changes on the counter display.
3. **Press the SELECT button to select the setting value.**
   - The counter display shows the setting value.
4. **To change additional items, repeat steps 2 to 3.**
5. **Press the SET button to register the new setting.**
   = During setting, "SET" blinks on the counter display and "MENU SET" blinks on the on-screen display. When setting is complete, the normal screen is restored.

4-5 USER PAGE REGISTRATION/CHANGE/DELETE (User page function) (con't)

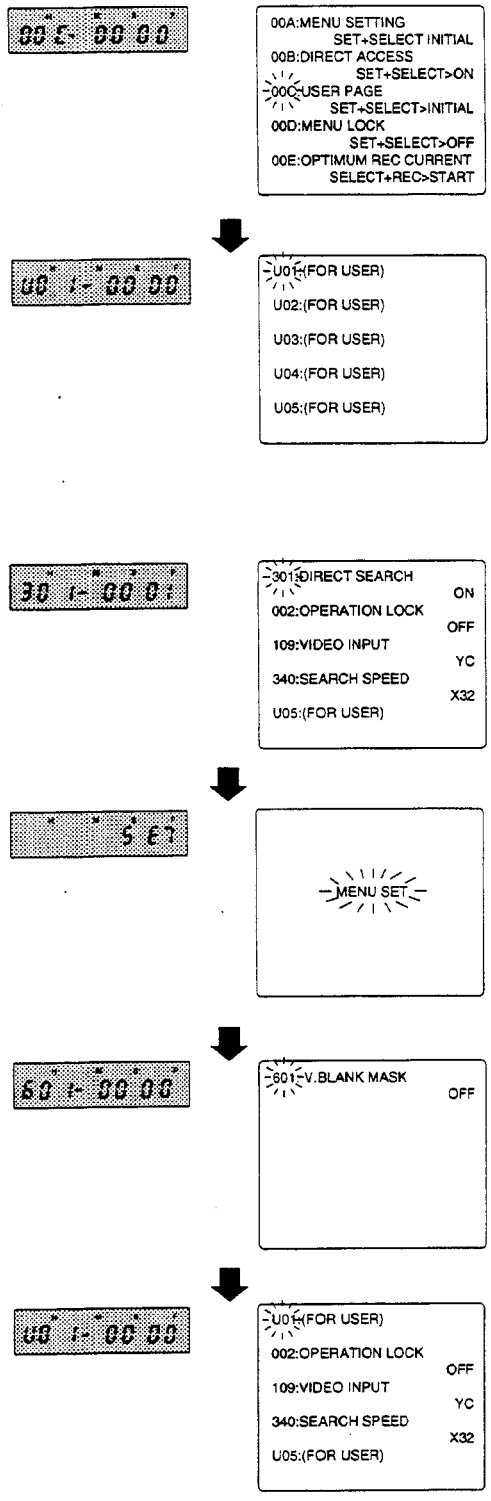

Procedure

Erasing all registered items on the User Page

1. **Press the [MENU] button and turn the [JOG] dial to call up the top menu.**
   = The top menu screen is shown on the on-screen display and counter display.
2. **Select "00C USER PAGE" on the top menu.**
   "00C" is shown on the counter display and "00C" blinks on the on-screen display.
3. **While keeping the [SET] button pressed, press the SELECT button.**
   = All registered items on the User Page are erased and the display returns to the normal display mode.

Erasing registered items one at a time

1. **Press the [MENU] button to select the Menu Switch Display mode.**
2. **Turn the [JOG] dial to access the User Page display and select the menu switch item to be erased.**

* The selected menu switch number blinks on the on-screen display.

* The menu switch number is changed on the counter display.

3. **Hold the [SET] button pressed.**
   = During setting, "SET" blinks on the counter display and "MENU SET" blinks on the on-screen display.

> While still keeping the [SET] button pressed (even after the "SET" indication goes out), perform the next operation.

4. **Turn the [JOG] dial to move to the other menu switch screen page. Release the [SET] button.**
   = The registered item on the User Page is erased.
5. **To erase more items, repeat steps 2 through 4.**
6. **Press the [MENU] button to finish.**
   = The normal display mode is restored.

4-6 How to lock the menu switch settings (menu switch lock function)

To prevent accidental erasure of menu switch settings, you can lock the menu switch settings. This function is not the same as operation lock.

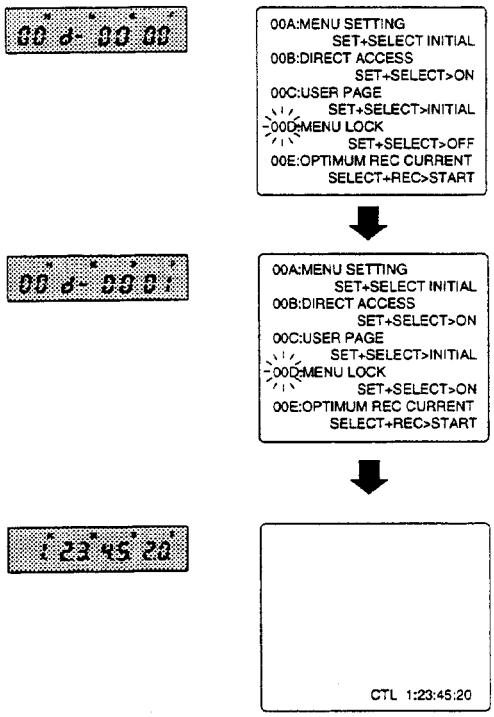

Procedure

Activating the menu switch lock function

1. **Press the [MENU] button and turn the [JOG] dial to call up the top menu.**
   = The top menu screen is shown on the on-screen display and counter display.
2. **Select "00D: MENU LOCK" on the top menu with the [JOG] dial.**
   "00D" is shown on the counter display and "00D" blinks on the on-screen display.
3. **Select "ON (1)" with the [SELECT] button.**
4. **While keeping the [SET]-button pressed, press the [SELECT] button.**
   = The menu switch lock function is set to "ON" and the normal display is restored.

To disable the menu switch lock function, select "OFF (0)" with the [SELECT] button. Then, while keeping the [SET] button pressed, press the [SELECT] button.

When the menu switch lock function is activated, only the top menu settings can be changed. All other settings are locked.

4-7 Recording current adjustment (recording current adjustment function)

Thanks to this function, it is not necessary to adjust the recording current each time the tape is changed.
When a tape with a different optimum recording current is used, this function allows you to take advantage of this tape's performance.
If automatic adjustment is performed on a tape which has been used many times, its optimum recording current may be quite different from that of a new tape. In this case, perform automatic adjustment using the new tape.

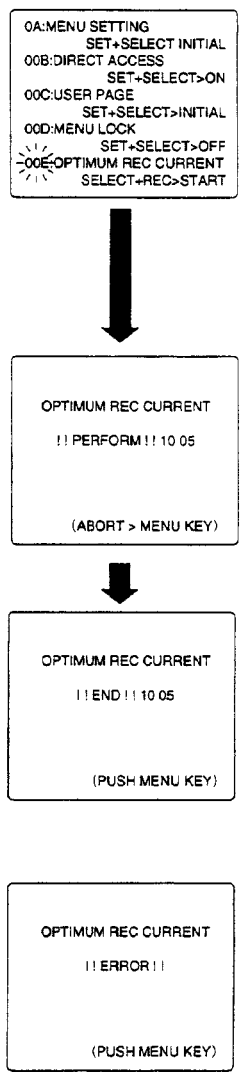

Procedure

Activating the recording current adjustment function

1. **Select either a component signal as the video input signal or set the menu switch No. 111 "REC SIGNAL SELECT" to "INTERNAL COLOR BAR".**
2. **Load a recording tape and engage the Stop mode.**
3. **Press the [MENU] button and turn the [JOG] dial to call up the top menu.**
   = The top menu screen is shown on the on-screen display and counter display.
4. **Select "00E OPTIMUM REC CURRENT" on the top menu with the [JOG] dial.**
   • "00E" is shown on the counter display and "00E" blinks on the on-screen display.
5. **While keeping the [REC] button pressed, press the SELECT button.**
   = Automatic recording current adjustment will start. It takes several minutes to complete the automatic adjustment.
   • To interrupt the adjustment, press the [MENU] button twice.

   • When adjustment is finished, the indication shown on the left is displayed on the on-screen display.
6. **When the indication on the left figure is shown on the on-screen display, press the MENU button twice.**
   = The previous display mode is restored.

   • When the adjustment cannot be completed, the indication shown on the left is displayed on the on-screen display.
   In this case, change the recording position or replace the recording tape.

4-8 HOUR METER DATA DISPLAY

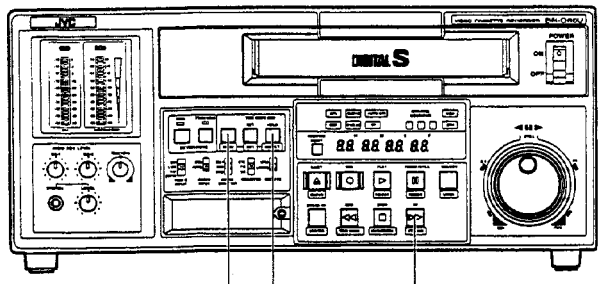

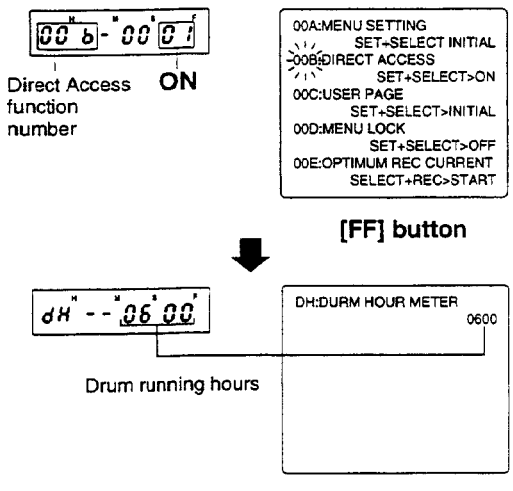

Drum running hours can be displayed on the counter display and the on-screen display. Use this information as a guide to choosing the appropriate maintenance interval.

Procedure

1. **Press the [MENU] button.**
   = The Menu Display mode is engaged.

2. **Select the DH display by turning the [JOG] dial.**
   = Hour meter data (drum running hours) is displayed on the counter display and the on-screen display (0000H - 9999 H).

3. **To return to the normal display mode, press the [MENU] button.**

When the Direct Access function is set to ON, press the [FF] button to accelerate item indication.

5 MENU SWITCH SETTING DETAILS

5-1 MENU SWITCH LIST

Gives the names and brief description of the menu switches. See reference pages for details

Functional group	No	Names	Description	Reference Page
SERVO	002	OPERATION LOCK	Operation mode lock ON/OFF	32
	005	AUTO TRACKING	Selects auto/manual tracking.	32
VIDEO	103	WIDE ASPECT ID REC	Selects ID record data for wide aspect picture.	32
	104	COMPONENT LEVEL	Selects component level.	32
	109	VIDEO INPUT	Selects video input signal, YC358/component.	33
	110	VIDEO PHASE	Selects video phase adjust method selection.	33
	111	REC SIGNAL SELECT	Selects video record signal, input signal/color bar.	33
	112	ECC MODE	Selects error correction function.	33
	113	EXTRA LINE REC	Selects video input signal to be recorded on extra line.	34
	114	EXTRA LINE -1 REC SEL	Selects input signal line to berecorded on extra line -1.	34
	115	EXTRA LINE -2 RECSEL	Selects input signal line to be recorded on extra line -2.	34
	116	EXTRA LINE PB	Selects extra line data adding mode in playback.	35
	117	EXTRA LINE-1 PBSEL	Selects line for additional extra line-1 data output.	35
	118	EXTRA LINE -2 PB SEL	Selects line for additional extra line-2 data output.	35
	119	SLOW PICTURE	Selects the Slow mode.	36
SYSTEM	300	DIRECT EJECT	Direct eject ON/OFF	36
	301	DIRECT SEARCH	Direct search ON/OFF	36
	302	BACK SPACE	Back space operation ON/OFF	36
	311	AUTO PLAY	Auto play operation ON/OFF	36
	312	AUTO REW	Auto rewind operation ON/OFF	36
	317	9PIN DEVICE ID	Selects device type ID returned to 9-pin remote control.	37
	326	COUNTER MEMORY	Counter memory function ON/OFF	37
	340	SEARCH SPEED	Selects dial search speed.	37
	351	PRE READ	PRE READ function ON/OFF	37
	355	PB/EE SEL STANDBY	Selects mode in standby.	38
	356	PB/EE SEL FF/REW	Selects mode in FF/REW.	38
	357	DIAG AT POWER ON	Automatic diagnosis operation ON/OFF at power ON.	38
TIME CODE	400	VITC LINE-1 SELECT	Sets line for adding VITC-1.	39
	401	VITC LINE-2 SELECT	Sets line for adding VITC-2.	39
	402	CTL DF SELECT	Selects nondrop/drop frame of CTL counter.	39
	403	REGEN MODE	Selects mode of time code to be regenerated.	39
	409	EXT REGEN TC	Selects external source for regeneration.	40
	416	NON-DROP/DROP	Selects nondrop/drop frame.	40
	450	SUB TC (VITC) REC	Selects sub time code data to be recorded.	40
	451	VITC OUT SELECT	Selects output VITC main/sub time code.	40
	452	SEARCH LTC	Sets LTC time code output method in the Search mode.	40
ON-SCREEN	500	ON-SCREEN DISPLAY	On-screen ON/OFF	41
	501	CHARA H POSITION	Sets on-screen horizontal display position.	41
	502	CHARA V POSITION	Sets on-screen vertical display position.	41
	504	INFORMATION SELECT	Selects on-screen information.	41
TBC. FRAME MEMORY	601	V.BLANK MASK	V.SYNC masking ON/OFF in playback.	41

5-2 MENU SWITCH SETTING CONTENT

<SERVO> [ ] : Factory setting

Item		Setting		Content
Menu SW No.	On-screen display	Counter display	On-screen display	
002	OPERATION LOCK	[0] 1	[OFF] ON	Switches the operation mode lock ON/OFF. Set to ON to lock the VCR in the current operation mode. When set to ON, you cannot operate the control buttons, switches, knobs and dials on the VCR or change any menu switch settings other than this menu switch itself. Only the POWER switch ,the PHONES LEVEL adjust knob remain operable.
005	AUTO TRACKING	0 [1]	OFF [ON]	Selects ON or OFF tracking adjustment in the Play mode. When set to ON, the tracking value is automatically adjusted to the optimum position when the Play mode is engaged. The TRACKING knob is not operable.When the Automatic Tracking mode is engaged, tracking adjustment takes several seconds. During this time, signals on the linear track are output as audio signals. When set to OFF, tracking can be adjusted manually with the TRACKING knob.
<VIDEO>				
103	WIDE ASPECT ID REC	[0] 1 2	[AUTO] WIDE NORMAL	Enables or disables recording of the normal/wide picture size ID signal. AUTO: Automatically detects and records the ID signal if present in input Y/C signals. WIDE: Records the ID signal regardless of the type of signal input. NORMAL: Does not record ID signals even if present in input Y/C signals.
104	COMPONENT LEVEL	[0] 1	[LOW] HIGH	Set the input and output of the [Y.R-Y.B-Y] connectors on the rear panel. LOW: Component signals for MII/D1 VCR. HIGH: Component signals for Betacam VCR.

5-2 MENU SWITCH SETTING CONTENT

[ ]: Factory setting

Item		Setting		Content
Menu SW No.	On-screen display	Counter display	On-screen display	
109	VIDEO INPUT	[0] 1	[Y/C] CPN	Selects the video input signal when the front panel [VIDEO INPUT] switch is set to Y/C (CPN). Y/C : Receives a YC separate signal from the rear panel Y/C358 input connector. CPN : Receives a component signal from the rear panel [Y/R-Y/B-Y] input connector.
110	VIDEO PHASE	[0] 1	[UNITY] VARIABLE	Selects whether or not to perform phase adjustment on the video signal output from the rear panel [VIDEO LINE-1], [VIDEO LINE-2] and [Y/C358] output connectors. UNITY: Video phase adjustment is disabled and cannot be activated even by turning the [VIDEO PHASE] control on the front panel VIDEO CONTROL section. VARIABLE: Video phase adjustment can be applied by turning the [VIDEO PHASE] control on the front panel VIDEO CONTROL section.
111	REC SIGNAL SELECT	[0] 1	[INCOME] INTERNAL COLOR BAR	Selects a signal from the video input connector or a color bar signal from the built-in signal generator for use as a video signal in the EE and Record modes. INCOME: Records a signal from the rear panel video input connector. INTERNALCOLOR BAR: Records a color bar signal from the built-in signal generator.
112	ECC MODE LEVEL	[0] 1 2	[NORMAL] NO CANCEL NO CORRECTION	This activates or deactivates the error correction circuit (error conceal, error correction). NORMAL: Activates all error correction circuitry. NO CONCEAL: The error conceal circuit does not function. NO CORRECTION: Neither the error conceal nor the error correction circuits function. For details, refer to page 52.

5-2 MENU SWITCH SETTING CONTENT

[ ] : Factory setting

Item		Setting		Content
Menu SW No.	On-screen display	Counter display	On-screen display	
113	EXTRA LINE REC	[0] 1	[FIX] USER SETTING	Selects an input video signal line to record on extra lines. FIX: Records the information from line 21 of the input signal on the extra line -1 and the information from line 22 of the input signal on the extra line -2. USER SETTING: Records the information from two user-selected input signal lines on the extra lines -1 and -2. ● User-designated lines can be selected with menu switches No. 114 and No. 115.
114	EXTRA LINE-1 REC SEL	00 01 02 ⋮ [12] 18 ⋮ 29	10 11 12 ⋮ [22] 273 ⋮ 284	Selects an input video signal line to be recorded on extra line -1. (Effective only when menu switch No. 113 EXTRA LINE REC is set to USER SETTING.) ● Select one line from LINE 10 TO LINE 22 or LINE 273 TO LINE 284.
115	EXTRA LINE-2 REC SEL	00 01 02 ⋮ 12 18 ⋮ [29]	10 11 12 ⋮ 22 273 ⋮ [284]	Selects the input video signal line to be recorded on extra line -2. (Effective only when menu switch No. 113 EXTRA LINE REC is set to USER SETTING.) ● Select one line from LINE 10 TO LINE 22 or LINE 273 TO LINE 284.

5-2 MENU SWITCH SETTING CONTENT

[ ] : Factory setting

Item		Setting		Content
Menu SW No.	On-screen display	Counter display	On-screen display	
116	EXTRA LINE PB	0 1 [2] 3	MUTE AUTO [AUTO WITH ALIAS] USER SETTING	Selects the mode for adding extra line information to the playback video signal in the Play mode. MUTE: Does not add any extra line information to the playback video signal. AUTO: Outputs a video signal with the extra line information added to the line selected during extra line recording. AUTO WITH ALIAS: Outputs a video signal with the extra line information added to the line selected during extra line recording. Here, the video signal is delivered with the same information added to its counterpart line (for instance, the counterpart line for line 10 is line 272). USER SETTING: Outputs a video signal with extra line information added to the two user-designated lines. These lines can be selected with menu switches No. 117 and 118.
117	EXTRA LINE-1 PB SEL	00 01 ⋮ [12] 18 ⋮ 29	10 11 ⋮ [22] 273 ⋮ 284	Selects a playback video signal line to add the information recorded on extra line -1 for output. (Effective only when menu switch No. 116 EXTRA LINE PB is set to USER SETTING.) • Select one line from LINE 10 TO LINE 22 or LINE 273 TO LINE 284. * When menu switch No. 601 "V. BLANK MASK" is set to ON, select one line from LINE 20 to LINE 22 or from 283 to 284. If a line is selected from outside these ranges, the information is not output to the extra line. Also, when information such as sub time code overlaps on the same line, the information is not output to the extra line.
118	EXTRA LINE-2 PB SEL	00 01 02 ⋮ 12 18 ⋮ [29]	10 11 12 ⋮ 22 273 ⋮ [284]	Selects a playback video signal line to add the information recorded on extra line -2 for output. (Effective only when menu switch No. 116 EXTRA LINE PB is set to USER SETTING.) • Select one line from LINE 10 TO LINE 22 or LINE 273 TO LINE 284. * When menu switch No. 601 "V. BLANK MASK" is set to ON, select one line from LINE 20 to LINE 22 or from 283 to 284. If a line is selected from outside these ranges, the information is not output to the extra line. Also, when information such as time code overlaps on the same line, the information is not output to the extra line.

5-2 MENU SWITCH SETTING CONTENT

[ ] : Factory setting

Item		Setting		Content
Menu SW No.	On-screen display	Counter display	On-screen display	
119	SLOW PICRURE	0 [1]	FRAME [FIELD]	Selects the type of picture output in the Slow Play mode. FRAME : Outputs a frame picture. FIELD : Outputs a field picture.
<SYSTEM>				
300	DIRECT EJECT	0 [1]	OFF [ON]	Selects Direct Eject ON/OFF. OFF: Eject is enabled only in the Stop (standby-on/off) mode. ON: Eject is enabled in any mode.
301	DIRECT SEARCH	0 [1]	OFF [ON]	Selects Direct Search ON/OFF OFF: The search/jog dials can be used when the [SEARCH] button is pressed. ON: Search and jog can be enabled in any mode except Record.
302	BACK SPACE	0 [1]	OFF [ON]	Enables or disables backspacing after Record Pause. OFF: No backspacing after Record Pause ON: Backspacing after Record Pause When set to OFF, recording will start more quickly than when set to ON. However, transitional picture quality is affected at the start of recording.
311	AUTO PLAY	[0] 1	[OFF] ON	Selects the mode engaged when the tape ends in the REW mode. OFF: Stop (stanby-on) is engaged. ON: Playis is engaged.
312	AUTO REW	[0] 1	[OFF] ON	Selects the mode engaged when the tape ends in the Play or Record mode. OFF: Stop (standby on) mode is engaged. ON: REW is engaged.

5-2 MENU SWITCH SETTING CONTENT

[ ] : Factory setting

Item		Setting		Content
Menu SW No.	On-screen display	Counter display	On-screen display	
317	9PN DEVICE ID	[0] 1 2 3	[JVC D80] OTHER TYPE-1 OTHER TYPE-2 OTHER TYPE-2	Device-type interrogation from the 9-pin remote control Selects the ID code to reply for TYPE REQUEST. JVC D80 : Replies with ID code for the BR-D80U, BR-D50U, BR-D85U and BR-D51U.In addition to JVC models, the following Sony models can be used. OTHER TYPE-1 : Replies with ID code for the DVW-C500. OTHER TYPE-2 : Replies with ID code for the BVU-800. OTHER TYPE-2: Replies with ID code for the BVW-75.
326	COUNTER MEMORY	[0] 1	[OFF] ON	Selects counter memory ON/OFF. OFF: Counter memory function is disabled. ON: Counter memory function is enabled. The Stop (standby on) mode is engaged when the CTL counter is close to 0:00:00:00 during FF or REW operation.
340	SEARCH SPEED	[0] 1	[x 32] x 17	Selects the maximum search speed. X32: Maximum search speed is +/-32 times normal when the search dial is turned fully clockwise or counterclockwise. X17: Maximum search speed is +/-17 times normal when the search dial is turned fully clockwise or counterclockwise.
351	PRE READ	[0] 1	[OFF] ON	Switches the pre-read function on and off. OFF : The pre-read function is disabled. ON : The pre-read function is enabled. During editing, pre-read pictures are output from the recorder's video output connector. Refer to "Pre-read function" on page 57. In assemble editing, the pre-read function is always enabled regardless of this setting.

5-2 MENU SWITCH SETTING CONTENT

[ ] : Factory setting

Item		Setting		Content
Menu SW No.	On-screen display	Counter display	On-screen display	
355	PB/EE SEL STANDBY	0 [1]	EE [PB]	Selects PB or EE mode in the Stop mode. EE: Outputs EE signal. PB: Outputs playback signal.When the Stop mode is first engaged after a cassette is loaded, a black picture is output. When set to EE, a color bar signal can be delivered from the built-in signal generator by setting menu switch No. 111 REC SIGNAL SELECT to INTERNAL COLOR BAR.
356	PB/EE SEL FF/REW	0 [1]	EE [PB]	Selects the PB or EE mode in the FF and REW modes. EE: Outputs EE signal. PB: Outputs playback signal. When set to EE, a color bar signal can be delivered from the built-in signal generator by setting menu switch No. 111 REC SIGNAL SELECT to INTERNAL COLOR BAR.
357	DIAG AT POWER ON	[0] 1	[OFF] ON	Selects whether or not self-diagnosis is executed when the power is turned on. OFF: Self-diagnosis is not executed. ON: Self-diagnosis is executed. While diagnostics are running ("DIAGNOSTIC" blinks on the screen), you cannot load a cassette. Do not try to forcibly load it. After completion of diagnostics, a warning indication is shown if there is an abnormality. Refer to "WARNINGS WITH INDICATORS" on page 71.

5-2 MENU SWITCH SETTING CONTENT

<TIME CODE> [ ] : Factory setting

Item		Setting		Content
Menu SW No.	On-screen display	Counter display	On-screen display	
400	VITC LINE-1 SELECT	0 1 2 3 4 5 [6] 7 8 9 10 11 12	10 11 12 13 14 15 [16] 17 18 19 20 21 22	Selects a VITC line for time code insertion from lines 10 – 22. Sets the VITC insert line which will be superimposed over video signals in the Play mode.
401	VITC LINE-2 SELECT	0 1 2 3 4 5 6 7 [8] 9 10 11 12	10 11 12 13 14 15 16 17 [18] 19 20 21 22	Selects a VITC line for time code insertion from lines 10 – 22. Sets the VITC insert line which will be superimposed over video signals in the Play mode.
402	CTL DF SELECT	[0] 1 2	[TCG SETTING] NON DROP DROP	Selects the CTL counter Drop Frame/Non-drop Frame mode. TCG SETTING: Non-drop Frame mode is engaged when menu switch No. 416 "DROP/NON DROP" is set to "NON DROP". If it is set to "DROP", the Drop Frame mode is engaged. NON DROP:Non-drop Frame mode is engaged . DROP:Drop Frame mode is engaged .
403	REGEN MODE	[0] 1 2	[TC&UB] TC UB	Selects TC or UB in the Time Code Regeneration mode. TC&UB: Regenerates time code and user bits. TC: Regenerates time code only. Preset data are engaged as user bits. UB: Regenerates user bits only. Preset data are engaged as time code.

5-2 MENU SWITCH SETTING CONTENT

[ ] : Factory setting

Item		Setting		Content
Menu SW No.	On-screen display	Counter display	On-screen display	
409	EXT REGEN TC	[0] 1	[LTC] VITC	Selects an LTC or VITC reference time code in the Regeneration mode. LTC: Regenerates with reference to the LTC delivered from the rear panel TC IN connector. VITC: Regenerates with reference to the VITC delivered from the rear panel VIDEO IN connector.
416	NON DROP/ DROP	0 [1]	DROP [NON DROP]	Selects Drop Frame or Non-drop Frame for time code. Effective only when the front panel PRESET/ REGEN switch is set to PRESET and INT/EXT switch to INT. DROP :Writes time code in the Drop Frame mode. NON DROP:Writes time code in the Non-drop Frame mode.The front panel DF indicator lights.
450	SUB TC(VITC) REC	0 [1]	OFF [ON]	Selects the time code to be recorded in the sub time code. OFF: "00:00:00:00" is always recorded on the sub timecode. ON: Input VITC is recorded in sub time code.
451	VITC OUT SELECT	0 [1]	SUB TC [TC]	Selects the VITC to be superimposed on video output signal. SUB TC: Sub time code is delivered to the output VITC. TC: Main time code is delivered to the output VITC.
452	SEARCH LTC	0 [1]	[OFF] ON	Enables or disables LTC output in the shuttle Search mode. LTC is output from the TC OUT connector. OFF : LTC is output only in X1 tape speed. ON : LTC is output in all search speed modes. Continuous time code is not available.

5-2 MENU SWITCH SETTING CONTENT

<ON-SCREEN> [ ]: Factory setting

Item		Setting		Content
Menu SW No.	On-screen display	Counter display	On-screen display	
500	ON SCREEN DISPLAY	0 [1]	OFF [ON]	Selects On-screen ON/OFF. On-screen information is delivered from the VIDEO MONITOR connector. OFF: On-screen display disabled. ON: On-screen display enabled.
501	CHARACTOR H POSITION	[0] ⋮ 6	[0] ⋮ 6	Selects the on-screen display start position from 7 horizontal positions (0-6). The factory-set 0 position is at the right end of the monitor display. The position shifts leftward as the numbers increase.
502	CHARACTOR V POSITION	[0] ⋮ 11	[0] ⋮ 11	Selects an on-screen display start position from 12 vertical positions (0-11). The factory-set 0 position is at the bottom of the monitor display. The position shifts upward as the numbers increase. When menu switch No. 504 "INFORMATION SELECT" is set to "TIME+MODE", the position set with 10 is the same as that with 11.
504	INFORMATION SELECT	0 [1]	TIME [TIME + MODE]	Selects on-screen display data. TIME: Displays time data only. TIME + MODE: Displays time data and mode data. When menu switch No. 451 "VITC OUT SELECT" is set to SUB TC, the sub time code data is shown on a different line at the same time. * A slight delay occurs in the displayed time code data. Do not dub the on-screen data as it is to a tape for off-line editing.
<TBC. FRAME MEMORY>				
601	V BLANK MASK	0 [1]	OFF [ON]	Selects whether or not to perform V.SYNC masking in the Play mode. OFF: No masking ON: Masking available

6 PREPARATION

6-1 OPERATION MODE LOCK

This unit is provided with an operation mode lock facility. This function prevents accidental changes to switch and control settings. When this function is ON, currently selected modes and knob or switch positions cannot be adjusted.

- Use menu switch No. 002 OPERATION LOCK to enable this function.
- With this function enabled, operation of all front panel control buttons, adjustment knobs, dials and switches is disabled and changes to menu switch settings are not possible. When this function is activated, it is not possible to change menu switch settings. However, the [PHONES LEVEL] control, the VIDEO CONTROL-related controls behind the front cover, and menu switch No. 002 "OPERATION LOCK" (to release the operation mode lock function) can be used.

Procedure

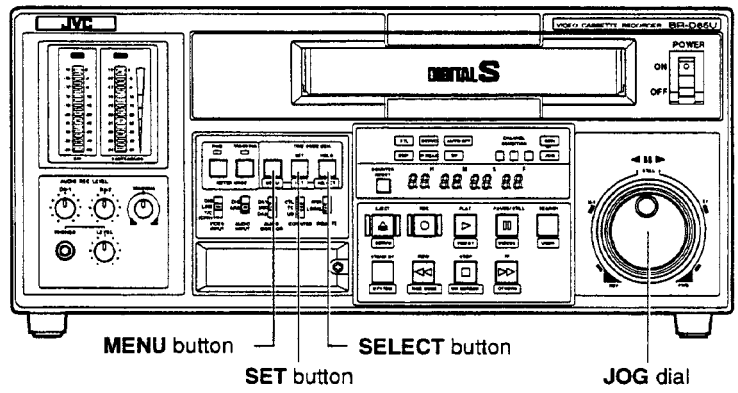

1. Make all desired settings and operate as usual.

2. Engage the operation lock function.

① Press the MENU button to call up the menu setting display.

② Turn the JOG dial and select menu switch No. 002 OPERATION LOCK.

If the Direct Access facility is ON, press the EJECT button to call up the menu item display more quickly.

③ Select ON(1) with the SELECT button. (See page 32.)

④ Press the SET button.

The operation lock function is ON.

After the SET indication blinks for several seconds, the normal counter and on-screen displays are restored.

3. To cancel the operation mode lock facility, set menu switch No. 002 OPERATION LOCK to OFF (0).

6-2 STANDBY ON/OFF

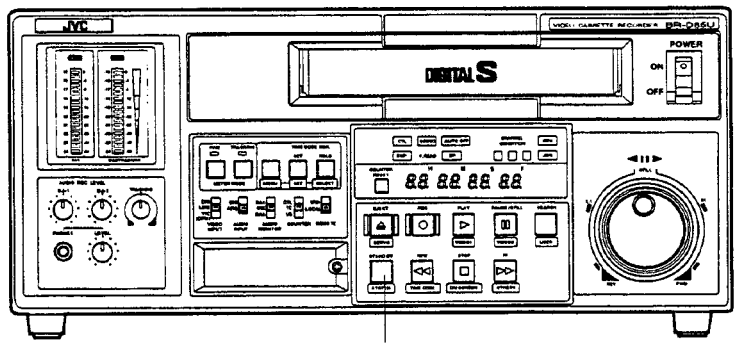

STANBY button

Notes

- Output mode selection in the Standby ON/OFF mode Select the mode with menu switch No. 355 PB/EE SEL STANDBY .
  - EE (0): EE mode is engaged, allowing the input signal to be monitored.
  - PB (1): Playback signals can be monitored. A black picture is output in the Standby ON/OFF mode after a tape has been loaded.
- To output a color bar signal, set menu switch No. 355 to EE (0) and set menu switch No. 111 REC SIGNAL SELECT to INTERNAL COLOR BAR (1). The built-in signal generator will produce a color bar signal.
- When menu switch No. 355 PB/EE SEL STANDBY is set to PB (1), you can monitor input signals by pressing the [REC] button.

Two different sub modes are available in the Stop mode.

Standby ON mode: The tape is loaded and the head drums are rotating, permitting quick start of operation when another mode is engaged. The **STANDBY** button is illuminated.

Standby OFF mode: The tape is loaded but the drums are stationary. The tape and the heads are protected against damage in this mode. The **STANDBY** button's light goes out.

The Output mode in the Standby ON and OFF modes can be selected with menu switches No. 355 and No. 111 (see notes for details).

Procedure

- Standby ON mode is engaged when the cassette is loaded or when the Stop mode is engaged with the STOP button.
- To change the Standby ON mode to the Standby OFF mode, press the STANDBY button.
  - = The **STANDBY** button goes out, indicating that the Standby OFF mode has been engaged.
- To change the Standby OFF mode to Standby ON mode, press the STANDBY button.
  - = The **STANDBY** button is illuminated, indicating that the Standby ON mode has been engaged.

* The Standby ON mode is automatically switched to the Standby OFF mode after about 5 minutes to protect the tape and the heads.

6-3 LOADING AND UNLOADING THE CASSETTE

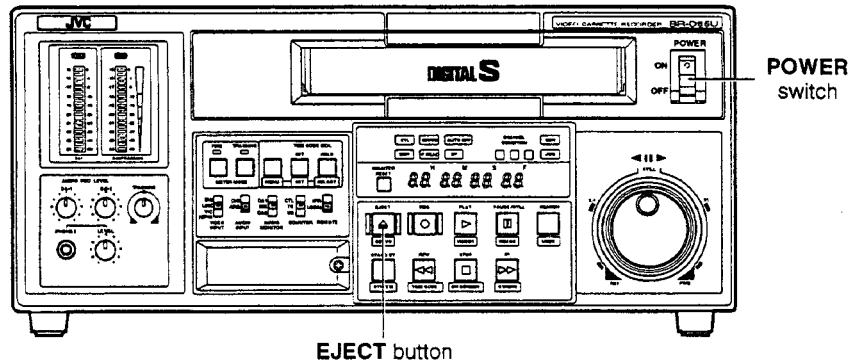

Notes

- To call up the on-screen display, set menu switch No. 500 ON-SCREEN DISPLAY to ON. On-screen data are output through the rear panel VIDEO MONITOR OUT connector.
- Be sure to use only S-VHS cassette tapes. VHS/S-VHS cassettes cannot be used.

Loading the cassette

1. Turn the POWER switch on.

= The counter display is illuminated.

* If a cassette is not loaded, the on-screen display indicates NO CASSETTE.

2. Load the cassette.

If tape tension is slack, tighten it before inserting the cassette. Insert the cassette with the cassette label facing you. Press the center of the cassette gently until the loading mechanism takes over.

= The cassette is automatically drawn into the slot and the **STOP** button lights. When the cassette is fully loaded, the Standby ON mode is engaged and the **STANDBY** button lights.

Unloading the cassette

- Conditional EJECT operation
  When menu switch No. 301 DIRECT EJECT is set to OFF (0), the EJECT button is enabled only in the Stop mode.
  With this switch set to ON (0), tapes can be ejected in any mode.

1. Press the EJECT button.

= The cassette is ejected.
The CTL counter is reset.

2. Remove the cassette from the slot.

Precautions

- Do not insert anything other than a cassette into the slot.
- Do not try to remove the cassette once automatic cassette loading has begun. Wait until loading is complete, then press the EJECT button.

7 RECORDING

7-1 PREPARATION FOR RECORDING

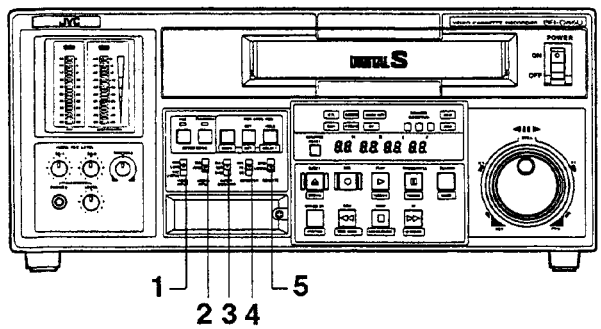

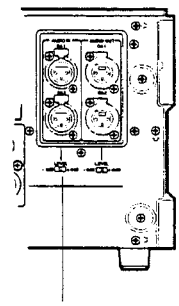

LEVEL switch

Front panel switch setting

1. Select an input video signal with the VIDEO INPUT switch.

DIG: To record a serial digital video signal.
LINE: To record a composite video signal from the LINE input connector
Y/C (CPN): To record a YC separate signal from the Y/C 358 connector or a component signal from the Y/B-Y/B-Y connector.

* Select an input signal with menu switch No. 109 VIDEO INPUT SELECT.

2. Select an input audio signal with the AUDIO INPUT switch.

DIG: To record a serial digital audio signal. To synchronize audio and video signals when recording digital audio signals, input video signals to the digital audio equipment as well.
ANA: To record an analog audio signal from the AUDIO input connector.

3. Select an audio signal to output through the rear panel AUDIO MONITOR OUT connector or through the front panel PHONES jack with the AUDIO MONITOR switch.

4. Set the tape counter.

Select time data to be displayed on the counter display or on-screen display with the COUNTER switch.

5. Select remote or local operation.

Set the REMOTE switch to LOCAL to use the main unit. Set it to 9PIN to use a RS-422 serial remote control unit.

Rear panel switch setting

6. Select the input audio level (-6 dB or + 4 dB) with the LEVEL switch.

Menu switch setting

Set the menu switches as required.

- **On-screen items**
  - On-screen ON/OFF... No. 500 ON-SCREEN DISPLAY Page 41
  Factory setting: ON (1)

  On-screen data is output through VIDEO MONITOR OUT.
- **Video items**
  - Wide aspect ID signal selection
  ... No. 103 WIDE ASPECT ID REC Page 32
  Factory setting: AUTO (0)
  - Recording a color bar signal from the built-in signal generator
  ... No. 111 REC SIGNAL SELECT Page 33
  Factory setting: INCOME (0)
  Set to INTERNAL COLOR BAR(1) when recording a color bar.
- **Record pause selection**
  - Backspacing selection
  ... No. 302 BACKSPACE Page 36
  Factory setting: ON (1)
- **Component video level selection**
  - Select LOW (MII level) or HIGH (Bcam level)
  ... No. 104 COMPONENT LEVEL Page 32
  Factory setting: LOW(0)

This unit cannot be used for sound-on-sound editing.

7-2 AUDIO RECORD LEVEL ADJUSTMENT

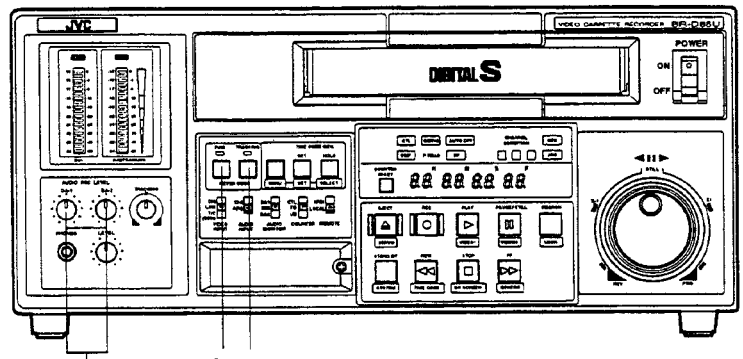

AUDIO REC LEVEL control

Notes

- The audio record level in the Standby mode can be adjusted in the EE mode.
  Set menu switch No. 355 PB/EE SEL STANDBY to EE (0).
  Factory setting: PB(1)
- The audio signal during recording or audio level adjustment can be monitored through the rear panel AUDIO MONITOR OUT connector or through the front panel PHONES jack.

Only the analog audio signal recording level can be adjusted. The recording level of digital audio signals cannot be adjusted.

1. Set the DA2/TRACKING meter for audio level.

- When the TRACKING indicator is off, the meter can serve as a DA2 audio level meter.
- When the TRACKING indicator is on, press the right METER MODE button.

→ The TRACKING indicator goes out indicating that the DA2 audio level meter is active.

2. Adjust DA1 and DA2 audio levels with the AUDIO REC LEVEL control.

- For finer level adjustment, press the left METER MODE button.

→ The FINE indicator lights and the audio level meter shows more precise audio levels.

Level meter in the Normal mode

Level meter in the Fine mode

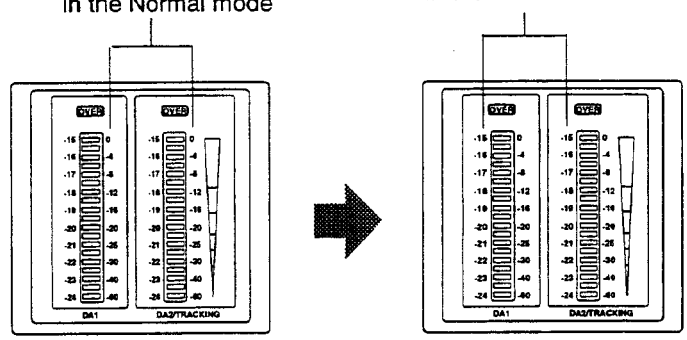

- When the input level is over the normal value, the **OVER** indicator lights. Adjust the level so that the **OVER** indicator goes out.

7-3 BASIC RECORDING OPERATIONS

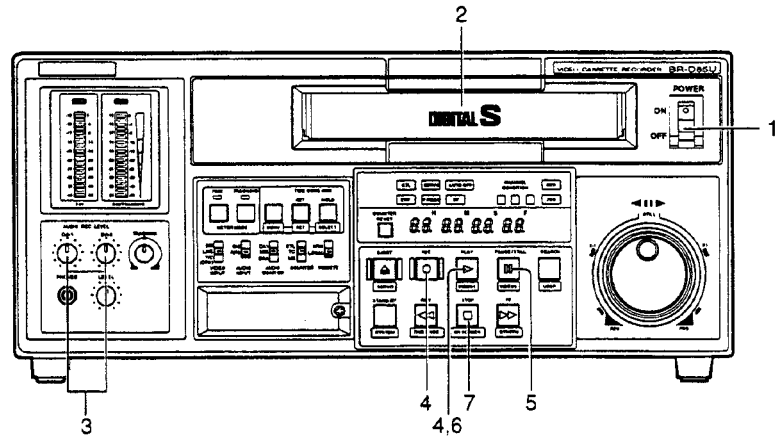

Notes

- Be sure to use only **DIGITAL S** cassette tapes. VHS/S-VHS cassettes cannot be used.
- Recording a color bar signal
  Set menu switch No. 111 REC SIGNAL SELECT to INTERNAL COLOR BAR (1). A color bar from the built-in signal generator is recorded.
- Recording a wide picture (16:9) ID signal
  Select with menu switch No. 103 WIDE ASPECT ID REC.
  AUTO: Records the ID if the ID signal is received through the YC input connector.
  WIDE: Records the ID regardless whether the ID signal is present in the YC input or not.
  NORMAL: ID is not recorded even if the ID signal is received from the YC input connector.

1. **Turn the POWER switch ON.**
2. **Load the cassette.**
   Make sure that the protective slide on the cassette is set to REC.
   = The tape is loaded and the **STANDBY** button lights.
3. **Adjust the audio signal recording level.**
   (See page 46 for audio recording level adjustment.)
4. **Start recording.**
   Press the PLAY button while pressing the REC button.
   = The **REC** and **PLAY** button indicators light and recording starts.
5. **To temporarily stop recording**
   Press the PAUSE/STILL button.
   = The **PAUSE/STILL** button lights and recording is paused.
6. **To re-start recording**
   Press the PLAY button.
   = The **PAUSE/STILL** button goes out and recording starts again.
7. **To end recording**
   Press the STOP button.
   = The **REC** and **PLAY** button indicators go out and the tape stops.

The Standby ON mode is automatically engaged when the tape ends.
- When menu switch No. 312 AUTO REW is ON (1), the tape is automatically rewound to the beginning.

* When the Play mode is switched to the E-E mode, the picture slightly shifts downward for a moment. However, the recording is not affected.

* Even if the frame is advanced periodically in the Record-Pause mode (every 5 minutes or so), the mode will still disengage after about 20 minutes to protect the heads and the VCR will automatically enter the Standby Off mode.

If menu switch No. 351 "PRE READ" is set to "ON", the Record mode cannot be engaged. For recording, set it to "OFF".

7-4 AUDIO EMPHASIS FUNCTION

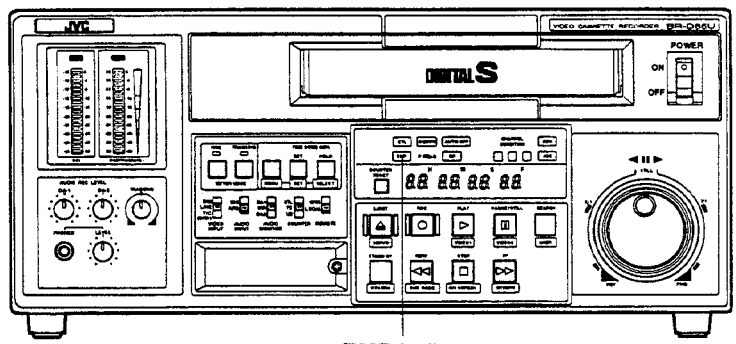

EMP indicator

You can record and play back the emphasis information contained in digital audio signals.
The EMP indicator shown on the above shows whether or not digital audio signals being recorded or played back are emphasized audio signal data. When the EMP indicator lights during recording, input digital audio signals are recorded as emphasized audio signals.
From the LINE OUT (analog audio signal) connector, the emphasized audio signals are output after their characteristics are de-emphasized (flat).

8 PLAYBACK

8-1 PREPARATION FOR PLAYBACK

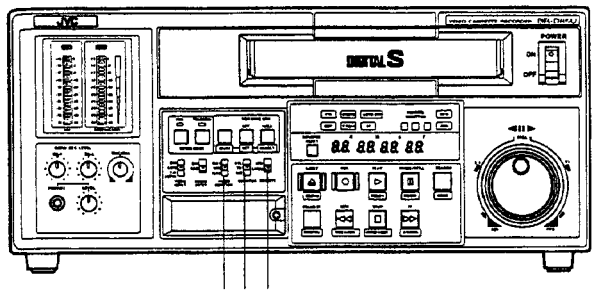

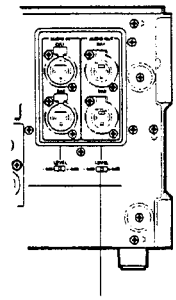

Front panel switch setting

1. **Select the audio signal to output through the rear panel AUDIO MONITOR OUT connector or through the front panel PHONES jack with the AUDIO MONITOR switch.**

2. **Set the tape counter.**
   Select time data to be displayed on the counter display or on-screen display with the COUNTER switch.

3. **Select remote or local operation.**
   Set the REMOTE switch to LOCAL to use the main unit. Set to 9PIN to use an RS- 422 serial remote control unit.

Rear panel switch setting

4. **Select the audio output level at the AUDIO OUT connector (-6 dB or + 4 dB).**

Menu switch setting

Set the menu switches as required.

- **On-screen items**
  - On-screen ON/OFF... No. 500 ON-SCREEN DISPLAY Page 41
    Factory setting: ON (1)
    On-screen data are output through the VIDEO MONITOR OUT.

- **Tracking adjustment selection**
  - Select AUTO or MANUAL ... No. 005 AUTO TRACKING Page 32
    Factory setting: AUTO (1)

- **Component video level selection**
  - Select LOW (MII level) or HIGH (Bcam level) ... No. 104 COMPONENT LEVEL Page 32
    Factory setting:LOW(0)

- **Error correction selection**
  ... No. 112 ECC MODE Page 33
  Factory setting: NORMAL (0)
  Corrects errors in digital signal processing.

- **Auto Rew mode selection**
  •Automatically rew from tape end
  ...No.312 AUTO REW Page 36
  Factory setting: OFF (0)

- **Auto Play mode selection**
  •Automatic play from the tape start
  ... No. 311 AUTO PLAY Page 36
  Factory setting: OFF (0)

8-2 BASIC PLAYBACK OPERATIONS

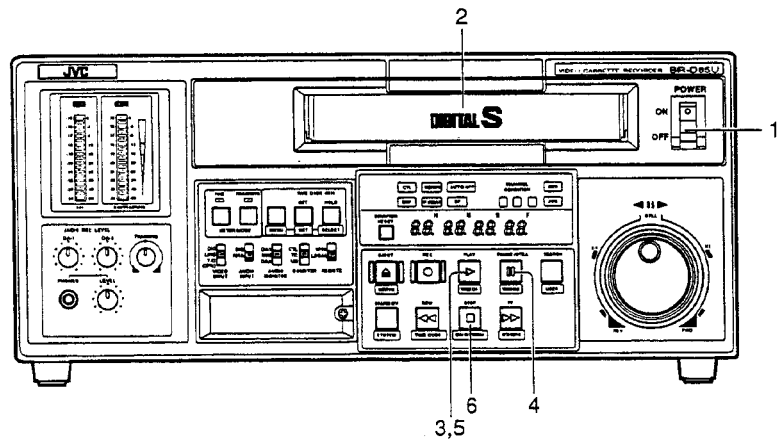

Notes

Masking the video signal vertical blanking period
If menu switch No. 601 V. BLANK MASK set to ON (1), the signal superimposed on the vertical blanking period will not be output. However, VITC will be output.

Tracking adjustment
For manual tracking adjustment, set the menu switch No. 005 AUTO TRACKING to MANUAL (1).

Output picture setting in the Standby ON mode
Perform this setting with menu switch No. 355 PB/EE SEL STANDBY. Set to EE to output the input signals. When this is set to "PB", you can monitor input signals by pressing the [REC] button.

When menu switch No. 111 REC SIGNAL SELECT to INTERNAL COLOR BAR, color bars are output.

* Even if the frame is advanced periodically in the Still mode (every 5 minutes or so), the mode will still disengage after about 20 minutes to protect the heads and the VCR will automatically enter the Standby Off mode.

1. Turn the POWER switch ON.

2. Load the cassette.
= When the tape is loaded, the **STANDBY** button lights to indicate that the Standby ON mode has been engaged.
* Be sure to use only **DIGITAL S** cassette tapes. VHS/S-VHS cassettes cannot be used.

3. Start playback.
Press the PLAY button.
= The **PLAY** button indicator lights and playback starts. The SERVO indicator lights and the picture stabilizes.
If menu switch No. 005 AUTO TRACKING is set to ON (1), tracking is automatically adjusted. As a result, it takes several seconds for the picture to stabilize after the [SERVO] indicator lights.The [SERVO] indicator blinks until the servo stabilizes.

4. To temporarily stop playback
Press the PAUSE/STILL button.
= The **PAUSE/STILL** button lights and the Still mode is engaged.

5. To re-start playback
Press the PLAY button.
= The **PAUSE/STILL** button goes out and playback resumes.

6. To stop playback
Press the STOP button.
= The **STOP** button indicator goes out and the tape stops.
In this state, the head drum is rotating in the Standby ON mode. Still pictures can be played back with memory switch No. 352 PB/EE SELECT set to PB.
When the STANDBY button is pressed, the **STANDBY** button goes out and the Standby OFF mode is engaged. Head drum rotation stops.

The Standby ON mode is automatically engaged when the tape ends. If menu switch No. 312 AUTO REW is ON (1), the tape is automatically rewound to the beginning.

To monitor input signal during playback
The input signal (both video and audio) can be monitored for as long as the REC button is kept pressed during playback.
Please note that the Record mode is engaged if the PLAY button is pressed together with the REC button.

8-3 MANUAL TRACKING AJUSTMENT

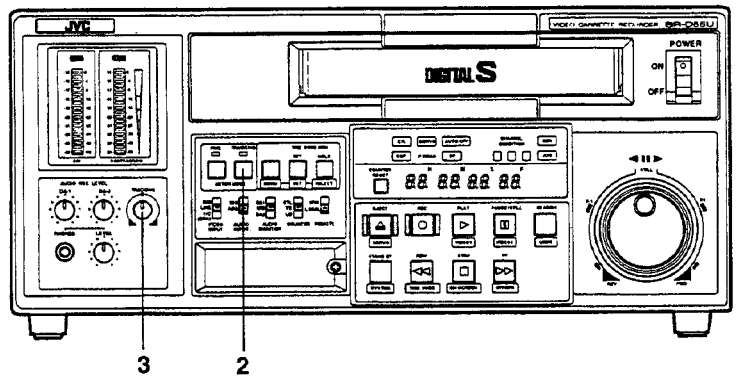

This unit is equipped with an automatic tracking facility which operates during playback to maintain optimum tracking (with menu switch No. 005 AUTO TRACKING set to AUTO (1)).
With some tapes, noise may still appear — particularly if the tape was recorded on a different VCR. In this case, manual tracking adjustment is also possible.

1. **Set menu switch No. 005 AUTO TRACKING to MANUAL (0).**

2. **Set the DA2/TRACKING meter for tracking.**
   Press the right METER MODE button.
   = The TRACKING indicator lights when the meter is switched to Tracking mode.

3. **Adjust until the tracking meter level reaches the maximum.**

The Auto Tracking mode can be restored by setting menu switch No. 005 AUTO TRACKING to AUTO (1).

8-4 Error correction

Error correction of digital playback signals is performed with the error correction circuit and the error conceal circuit.

Error correction circuit : Errors in playback data caused by dropouts or mis-tracking are corrected using the results of the data operation.

Error conceal circuit : Major errors that the error correction circuit cannot correct are concealed with the previous frame data.

Switching the setting of menu switch No. 112 "ECC MODE LEVEL" turns the error correction circuit ON/OFF.
The relationship between the menu setting and error correction operation is shown in the table below.

Menu setting	Error correction circuit	Error conceal circuit
NORMAL	o	o
NO CONCEAL	x	o
NO CORRECTION	x	x

o : Activated
x : Deactivated

- Normally set to "NORMAL".
- Turning part or all of the error correct circuit OFF allows you to compare noise levels and check the head service life. For comparison, play back a moving picture.
  For example, when switching between "NORMAL" and "NO CONCEAL" shows a big difference in picture quality, it indicates that the error conceal circuit works and that a major error has occurred. In this case, **the heads may no longer be serviceable and should be replaced.**

8-5 SHUTTLE SEARCH/JOG OPERATION

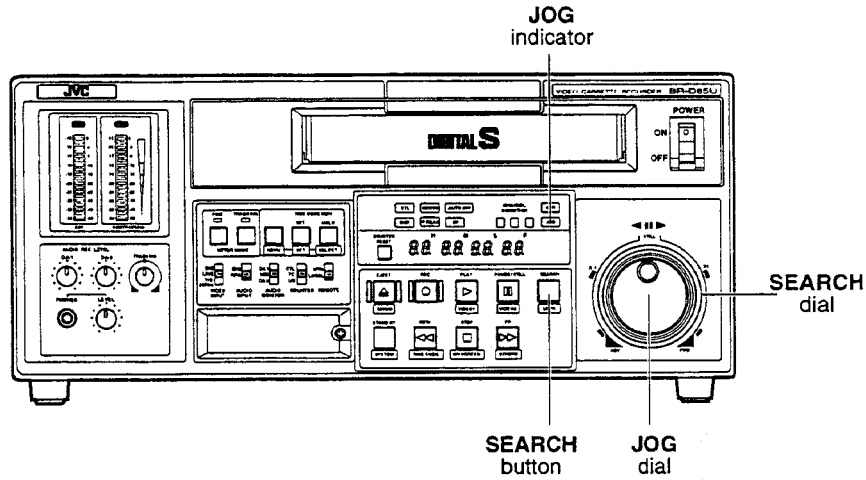

Notes

- Selecting modes in which Shuttle Search can be engaged.

  With menu switch No. 300 DIRECT SEARCH
  When set to OFF (0), Shuttle Search starts only when the SEARCH button is pressed.
  When set to ON, Search can start from any mode except REC and REC Pause mode.

- Maximum Search speed

  With menu switch No. 340 SEARCH SPEED to 17 (1) the maximum search speed is X17 at this setting.

- Slow Picture mode
  With menu switch No. 119 SLOW PICTURE
  FRAME (0): Slow-motion frame playback
  FIELD (1): Slow-motion field playback

- After a cassette is loaded, when the auto tracking function is set to ON and the tape is played back with the Search dial at the x1 position, a stable picture cannot be obtained. If the tape is played back with the [PLAY] button, the picture stabilizes.

Rapid visual search can be performed with either of two concentric dials; the outer one serving as a shuttle search dial and the inner one as a jog dial.

- Audio recorded on the tape's longitudinal cue track is output during shuttle search and jog operation.

Shuttle search control

1. Turn the outer dial in the Play/Still/Stop/FF/REW modes.
Turn the dial to FWD (clockwise) to search in the forward direction and to REV (counterclockwise) to search in the reverse direction.

= Search starts. Search speed changes as given below in both forward and reverse directions depending on how far the dial is turned.

Center (STILL) 0→1/30→1/15→1/10→1/5→1/2→ 1 (1st click)→2→4→ 6→ 10 (2nd click)→X32

- The Still mode is engaged when the dial is set at the center still click position. Play speed is X1 (normal) at the first click position in both forward and reverse directions. The maximum search speed can be selected with the menu switch No. 340 SEARCH SPEED.Noiseless playback is available from about -0.3x to +0.3x.

2. To stop search operation
Press PLAY, STOP, FF, or REW depending on which mode is to be engaged next.

= The selected mode is engaged. There is no change in the dial position.

When the SEARCH button is pressed, search operation starts at the speed corresponding to the current position of the dial.

Jog operation

1. Turn the inner jog dial.

- Turn the dial in the FWD direction (clockwise) to advance the tape.
  Turn the dial in the REV direction (counterclockwise) to reverse the tape.
  Search speed corresponds to the speed with which the dial is turned [0 (STILL) — X1]
- The Still mode is engaged whenever you stop turning the dial.
- The JOG indicator lights during jog operation.

8-6 FF, REW AND COUNTER MEMORY FUNCTIONS

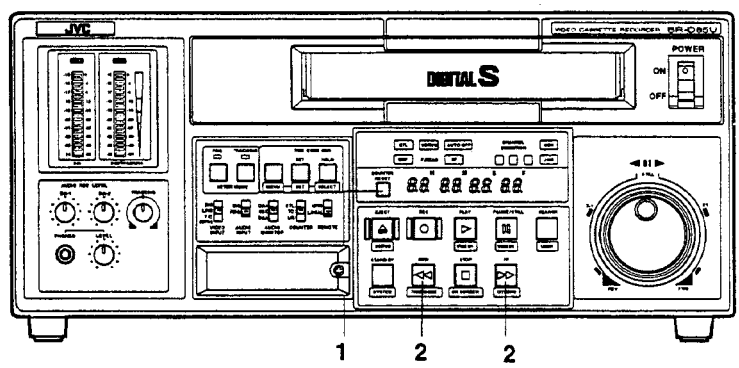

Notes

Output mode selection in FF and REW modes

With menu switch No. 356 PB/EE SEL FF/REW

- When set to EE (0), input signals are output for both audio and video.
- When set to PB (1), playback pictures are output.

Auto REW function setting

With menu switch No. 312 AUTO REW

The tape is automatically rewound to the start when it comes to an end in the Play or Record mode.

■ **To fast-forward or rewind the tape**

Press the FF or REW button.

= The FF or REW button lights and the tape is fast-forwarded or rewound at a speed approximately 60 times faster than normal speed.

■ **Counter memory function**

Note:
When menu switch No. 330 "AUTO REW" is set to "ON", the counter memory function is disabled during auto rewind.

Setting procedure

- Set menu switch No. 326 COUNTER MEMORY to ON (1).
- Set the front panel COUNTER switch to CTL.

Counter memory operation

1. Specify a tape section to be recalled.
   Press the COUNTER RESET button at the desired section.
   = The counter is reset to 0:00:00:00.
2. Start Counter Search.
   Press the FF or REW button in the Stop mode.
   The tape is fast-forwarded or rewound, automatically stopping at the point where the counter shows 0:00:00:00 (approximately).

8-7 REPEAT PLAYBACK

With this function activated, tape playback is automatically repeated when the tape ends.

Setting

- Set menu switch No. 311 AUTO PLAY to ON (1)
- Set menu switch No. 312 AUTO REW to ON (1)

■ Start playback

When the tape ends, it is rewound to the start and automatically begins playback. This procedure is repeated continuously.

9 VIDEO EXTRA LINE RECORDING AND PLAYBACK

The DIGITAL S VCR records video signal information from line 23 to line 262 and from line 285 to line 524. To compensate for this restriction, 2 extra lines are added for 1 frame. A data added to the V blanking section of input signals is recorded on the tape as an extra line. In the Play mode, this extra line information is added to the video signal for output.

9-1 EXTRA LINE DATA RECORDING

Select the line containing the information to be recorded on an extra line.

1. Setting the input signal line for extra-line recording
Select with menu switch No. 113 EXTRA LINE REC .

FIX (0)	Information on input signal line 21 is recorded on extra line-1 and the information on line 22 on extra line-2.
USER SETTING (1)	Information on designated input signal lines is recorded on extra lines -1 and -2. Set the lines with menu switches No. 114 and No. 115.

Note
See page 34 for details on menu switches No. 114 and 115.

2. Selecting an input signal line when USER SETTING (1) is selected in Step 1.

- Select a line to be recorded on extra line -1 with menu switch No. 114 EXTRA LINE-1 REC SEL.
- Select a line to be recorded on extra line -2 with menu switch No. 115 EXTRA LINE-2 RECSEL.

9-2 EXTRA LINE DATA PLAYBACK

The menu switches below are used to select whether or not the extra line information should be added to the video signal during playback, and if so, how it should be added.

1. Select how the extra line information is to be added to the playback video signal with menu switch No. 116 EXTRA LINE PB .

MUTE (0)	Extra line information is not to be added to the output video signal.
AUTO (1)	Extra line information is added to the selected line during extra-line recording for video signal output.
AUTO WITH ALIAS (2)	Extra line information is added to the selected line during extra-line recording for video signal output.The same information should be added to the back line (for instance, the back of line 10 is line 272) for video signal output. (Factory presetting.)
USER SETTING (3)	Extra line information should be added to the video signal on user-designated lines for playback video output. The two lines can be selected with menu switches No. 117 and No. 118.

2. Select a line on which extra line-1 information should be added to the playback video signal when USER SETTING (3) is selected in Step 1.

- Select a line on which extra line information should be added, with menu switch No. 117 EXTRA LINE PB-1 SEL.
- Select a line on which extra line-2 information should be added, with menu switch No. 118 EXTRA LINE PB-2 SEL.

Note
See page 35 for details on menu switches No. 117 and 118.

Notes on user setting of the external line

- When menu switch No. 601 V. BLANK MASK is set to ON, set the user setting for the external line within the ranges shown below.
  External line-1 information: line 20 to 22 and line 283 to 284
  External line-2 information: line 20 to 22 and line 283 to 284
- When the user-set external line is superimposed on the setting lines for menu switches No. 400 and No. 401 VITC LINE SELECT, external line information is not output.

Section 10 PRE-READ FUNCTION

10-1 Editing with the pre-read function

The pre-read function makes it easy to add A/B roll editing-style wipes and fades even when using only one player. Pre-read works by reading out the image at the recording start position just before recording starts during editing. Special effects can then be added to the read-out picture which is then recorded at its original position together with the incoming material. And because both sources (the player and recorder) can handle moving pictures, you'll be able to achieve smooth, natural and professional looking special editing effects.

Feature Comparison of Pre-Read with Conventional A/B Roll Editing.

	Conventional A/B roll editing system	Pre-read A/B roll editing system
Configuration	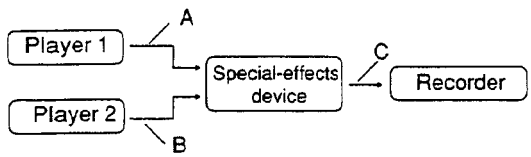	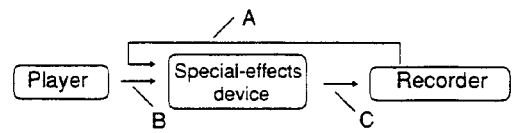
Source material	Source material is on two tapes. One tape is played back by each player.	Source material is obtained from the player's playback picture and the pre-read picture. Material from the recorder can be obtained automatically.
Picture with effects	Moving picture (two players)	Moving picture (picture from one player and pre-read picture from the recorder)
Editing operation	Edit point settings required for two players and one recorder.	Edit point settings required for one player and one recorder.
Wipe and mix effects, etc.	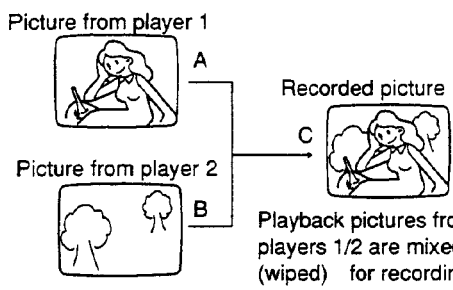 Playback pictures from players 1/2 are mixed (wiped) for recording.	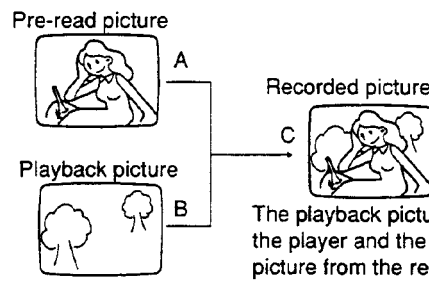 The playback picture from the player and the pre-read picture from the recorder are mixed (wiped) for recording.

10-2 Example of editing system configuration

An example of a pre-read editing system is shown below.

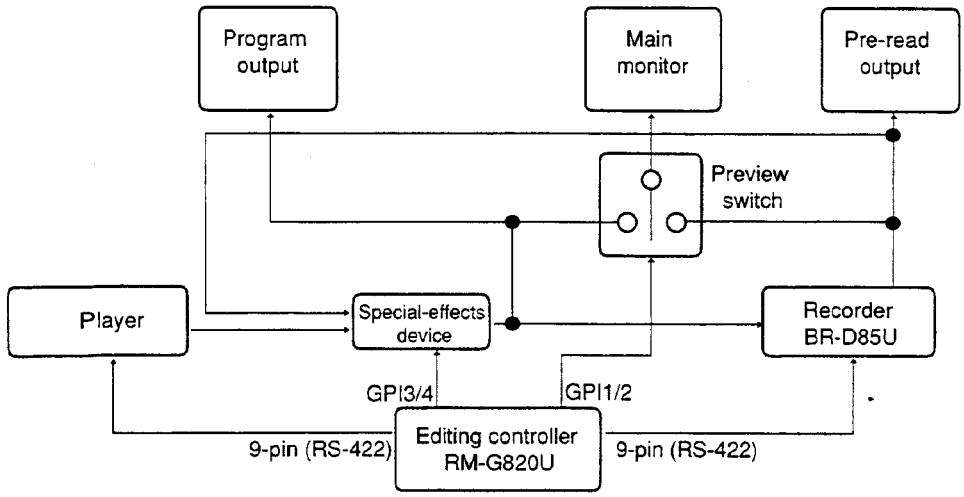

- Preview switcher
  Automatically switches the signal shown on the main monitor in conjunction with editing controller operation. (e.g. SW-320 from Imeginics Co., Ltd.)
- Enables editing without separate monitors for program output and pre-read output.
  When using an editing controller provided with the pre-read function, it is not necessary to set menu switch No. 351 PRE READ of the BR-D85U to ON (1).
  Usable controller: RM-G820U
- When using the RM-G820U, check that the model name shown on its packing case ends with (A) and that (A) is indicated on the serial number plate on the controller.

Positions indicating (A)

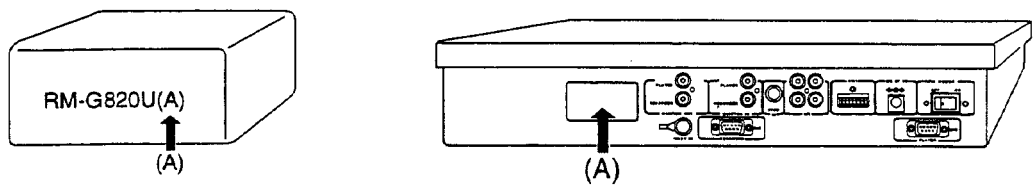

Note:
- When editing with the pre-read function, the material on the tape in the recorder is replaced with the special-effects pictures. If you want to keep the original material, be sure to back up the original tape.
- Pre-read editing is only possible with video signals.
- When video phase shifting is obvious in video signals inserted for pre-read editing, set menu switch No. 110 "VIDEO PHASE" to "VARIABLE" and adjust it with the [VIDEO PHASE] volume control behind the front cover.
- If the editing controller is not provided with the pre-read function, set menu switch No. 351 PRE READ of the recorder BR-D85U to ON (1).

11 HOW TO USE TIME CODE

Time codes and user bits can be recorded and played back as time data.
The time code area on the tape is divided into the main time code sector used for time data for editing and the sub time code sector which can be used for optional recording of time code.

11-1 TIME CODE DISPLAY

Notes
- On-screen display data are output through the rear panel VIDEO MONITOR OUT connector. (When menu switch No. 500 ON-SCREEN DISPLAY is set to ON (1))
- The on-screen display position can be moved with menu switches No. 501 and 502.

To display selected time data on the counter display and the on-screen display during playback or recording.

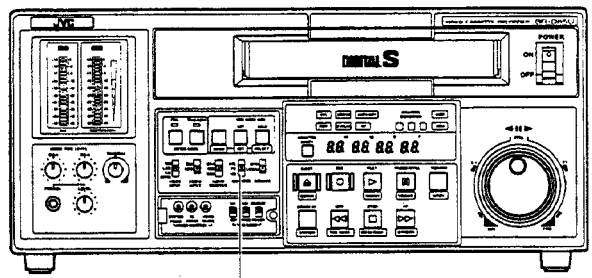

[COUNTER] switch

■ Set the COUNTER switch to TC or UB.

TC: Displays time code data.
UB: Displays user bits.

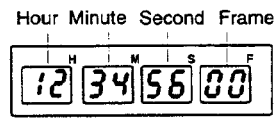

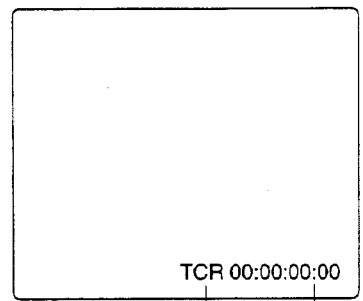

TCR: Time code reader data
TCG: Time code generator data
UBR: User bits reader data
UBG: User bits generator data
TCR •: CTL (control) signal interpolation mark

Sub time code data display

Sub time code, marked with "SUB", is displayed under the main time code on the on-screen display.

- Sub time code is shown when:
  - sub time code is output to the VITC output (with menu switch No. 451 VITC OUT SELECT set to SUB TC (0))

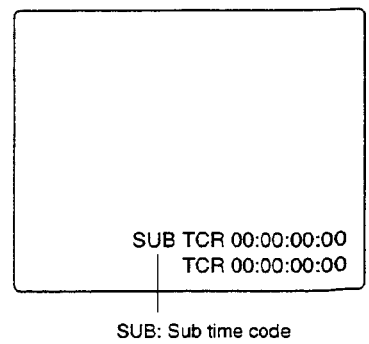

11-2 TIME CODE INITIAL SETTING (PRESET)

The BR-D85U includes a built-in time code generator so that initial values can be set as desired for the time code and user bits.

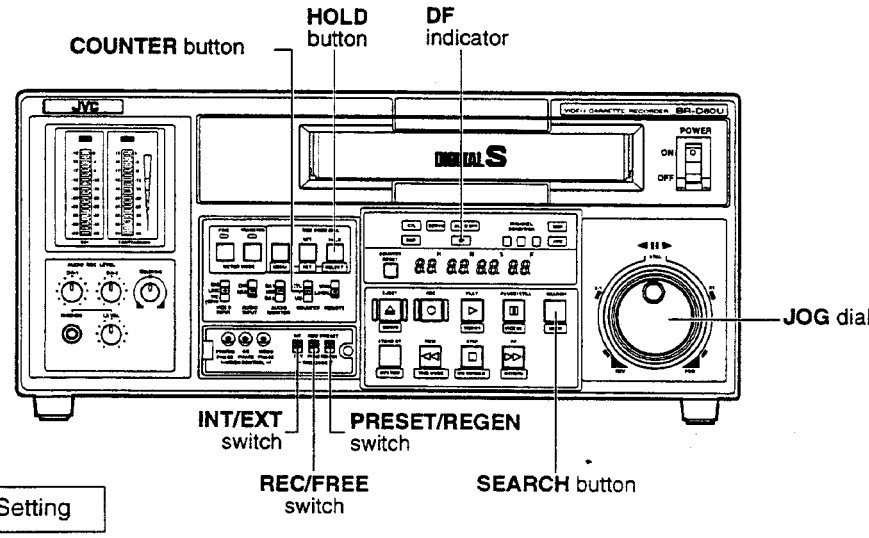

Setting

Front panel switches for time code setting

- Set the PRESET/REGEN switch to PRESET.
- Set the REC/FREE switch as desired.
  REC: Time code only runs in the Record mode.
  FREE: Time code runs continuously.
- Set the INT/EXT switch to INT.
- Select the Counter Display mode by setting the COUNTER switch to TC or UB.

Note
- With the Drop Frame mode engaged, the front panel DF indicator is illuminated.

Menu switch setting

- Set menu switch No. 416 NONDROP/DROP to:

  NON DROP (0): Sets the Running mode of the built-in time code generator to the NON Drop Frame mode.

  DROP (1) : Sets the Running mode of the built-in time code generator to the Drop Frame mode.

  Factory setting: NONDROP (0)

Procedure

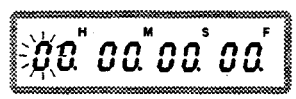

1. Engage the Time Code Generator Preset mode.
   Press the HOLD button.
   = The first digit on the counter display blinks.

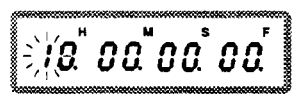

2. Set the value for the blinking digit by turning the JOG dial while pressing the SEARCH button.
   = The value of the blinking digit changes. Use the hexadecimal (0-9, A-F) for user bits.

3. Shift the digit by turning the JOG dial.
   = The blinking digits shift to the next one.

11-2 TIME CODE INITIAL SETTING (PRESET)

Note
Time code data starts running as soon as presetting is finished if the front panel FREE/REC switch is set to FREE.

To cancel a setting, press the [HOLD] button before the [SET] button has been pressed.

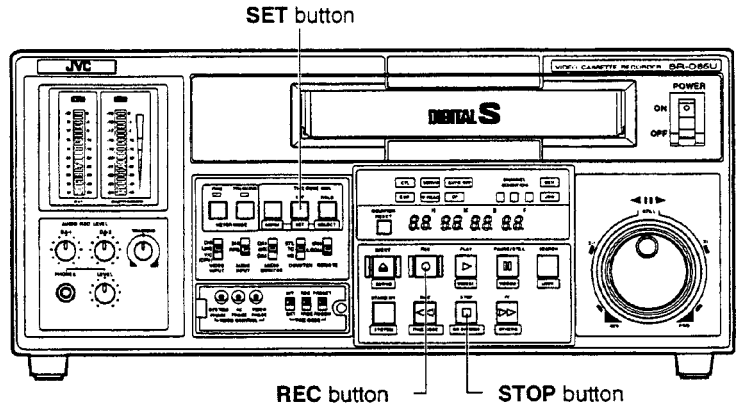

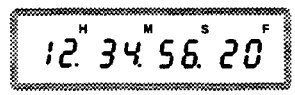

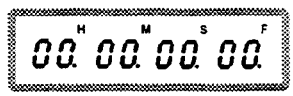

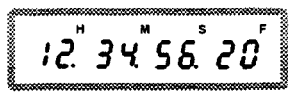

4. Set desired values for all digits.
Repeat steps 2 - 3.

5. Presetting is completed by pressing the SET button.

= The selected data are preset in the built-in time code generator. When preset is finished, the normal on-screen and counter displays are restored.

To check the values set in the time code generator, After unloading the tape or engaging the Stop mode, press the REC button.

= The values are displayed by prssing the REC button.
Pressing the STOP button restores the normal display mode.

11-3 TIME CODE RECORDING

There are two different ways of recording time code or user bits; recording the data output from the built-in time code generator and recording externally generated time code or user bits.

Recording time code data output from the built-in time code generator

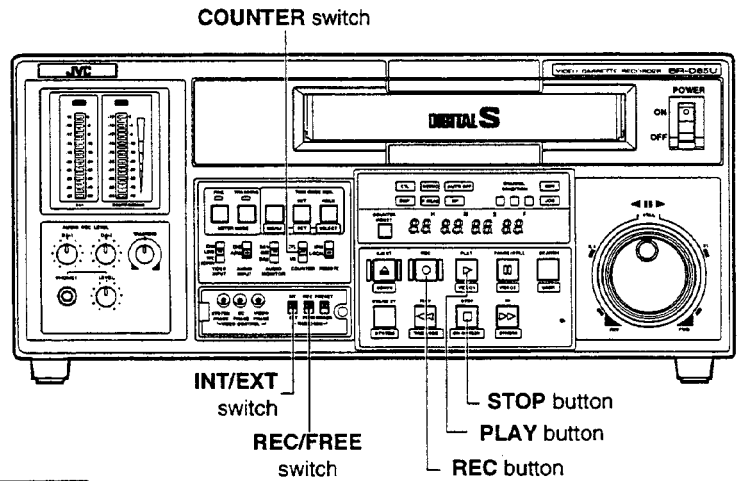

Setting

① **Front panel switch setting**
INT/EXT switch: Set to INT.
REC/FREE switch: Set to REC or FREE.
PRESET/REGEN switch: Set to PRESET or REGEN.
COUNTER switch: Set to TC or UB.

② **Menu switch setting**

- Menu switch No. 403 REGEN MODE: Set as desired.
- Menu switch No. 416 NONDROP/DROP: Set as desired.
- Menu switch No. 450 SUB TC (VITC) REC

When set to OFF (0): "00:00:00:00" is always recorded on the sub timecode.
When set to ON (1): Input VITC is recorded in the sub time code.
Factory setting: ON (1)

Note
- The front panel DF indicator is illuminated in the Drop Frame mode.

Procedure

1. Press the REC button in the stop mode and check the value of the built-in time code generator.
   = The data value stays on display when the REC button is pressed.
   •Press the STOP button to restores the normal display mode.
2. Record the time code and user bits.
   = Press the PLAY button while pressing the REC button.
   • TCG or UBG is shown on the on-screen counter display.
3. To stop recording, press the STOP button.

11-3 TIME CODE RECORDING

Recording the time code data output from the external time code generator

Externally generated time code can be recorded as it is or after being regenerated with the time code data output from the built-in time code generator.

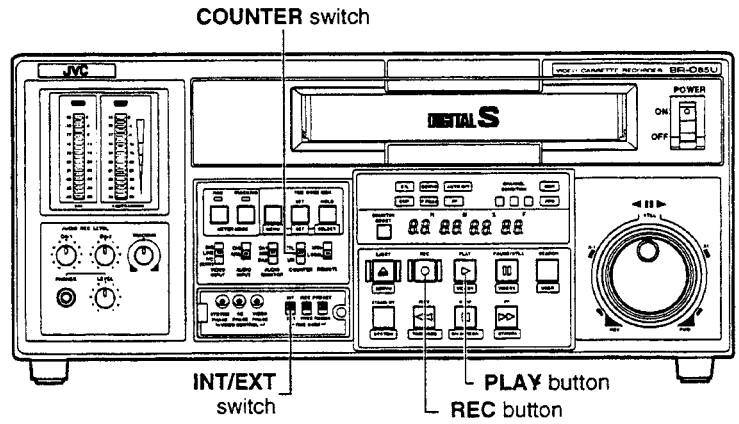

Notes

- Drop/Nondrop Frame mode selection
  Automatically selected according to the mode of the received time code (Drop Frame or Nondrop Frame).
- The front panel DF indicator is illuminated in the Drop Frame mode.

1. Front panel switch setting

① Select the External Time Code Generator mode by setting the INT/EXT switch to EXT.

② Select the Counter Display or On-screen Display mode by setting the COUNTER switch to TC or UB.

2. Menu switch setting

① Select the type of time code to be regenerated with the external time code.

- Menu switch No. 403 REGEN (Initial setting: TC&UB (0))

  TC&UB (0): Regenerates both time code and user bits.
  TC (1): Regenerates time code only.
  UB (2): Regenerates user bits only.

② Select the external time code to be regenerated.

- Menu switch No. 409 EXT REGEN TC (Initial setting: LTC (0))

  LTC (0): Regenerates the LTC time code input through the rear panel TC IN connector.Input LTC time code should be regenerated (matched in terms of sync and phase) with video signals. Make sure you input an external sync signal to the feeding equipment.
  VITC (1): Regenerates the VITC time code superimposed on the video signal input through the rear panel VIDEO IN connector.

③ Select the sub time code.

- Menu switch No. 450 SUB TC (VITC) REC (Initial setting: ON(1))

  OFF (0): "00:00:00:00" is always recorded on the sub timecode.
  ON (1): Records the input VITC time code in the sub time code.

3. Record the time code.

Press the PLAY button while pressing the REC button.

= The selected time code will be recorded.

- Regeneration operation
  During external time code recording, the time code generator continues running even when the regenerated time code input stops. In the Play mode, time code regeneration is based on the playback time code value.
- Inserting time code
  If only time code data is being inserted, record it on the main time code. It is not possible to insert it in the sub time code.

11-4 TIME CODE PLAYBACK

Time code is output through the rear panel TC OUT and VIDEO OUT-LINE connectors during playback. VITC time code with the time code data superimposed on the video signal is output through the VIDEO OUT-LINE connector. Sub time code is output through the VIDEO OUT-LINE connector as VITC time code. Only the main time code is output through the TC OUT connector.

Notes
- Set menu switch No. 601 V BLANK MASK to OFF (0) to disable VITC output.

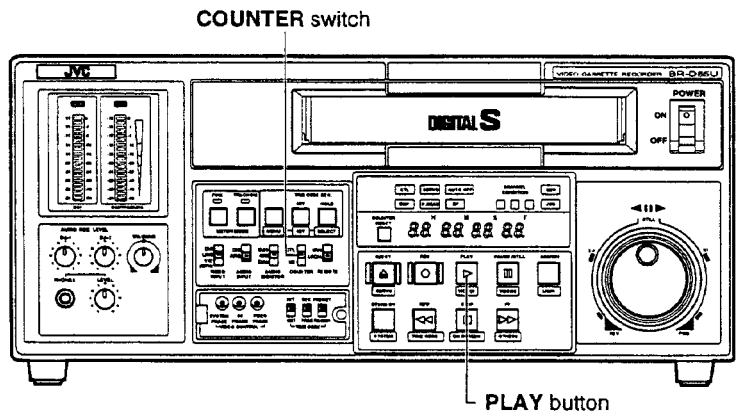

Setting

1. Front panel switch setting
- Select a Counter Display mode by setting the COUNTER switch to TC or UB.

2. Menu switch setting

① For VITC time code output, select a line to be added to the video signal (for main time code only).
- With menu switch No. 400 VITC-1 SELECT (Initial setting: 16 (6) LINE)
- With menu switch No. 401 VITC-2 SELECT (Initial setting: 18 (8) LINE)

② Select VITC time code output through the VIDEO OUT connector.
With menu switch No. 451 VITC OUT SELECT

SUB TC (0): Outputs the VITC time code recorded in the sub time code.
TC (1): Outputs the time code recorded in the main time code.
Factory setting: TC (1)

- On-screen display of sub time code
  Sub time code is displayed with the main time code when menu switch No. 451 VITC OUT SELECT is set to SUB TC (0).

③ Select the Time Code Output mode during search.
Menu switch No. 452 SEARCH LTC

OFF (0): Outputs time code through the [TC OUT] connector during search at X1.

ON (1): Outputs time code through the [TC OUT] connector during search at all speeds. Continuous time code is not available.

3. Play back the time code.
Press the PLAY button.

= The selected time code is played back.
TCR or UBR is shown with the on-screen time code data.
- LTC time code is output from the TC OUT connector.
- VITC time code is output from the VIDEO OUT connector.
- Main or sub time code selected with menu switch No. 451 VITC OUT SELECT is superimposed on video signals and output to the line selected with menu switch No. 400 and No. 401 from the [VIDEO OUT] connector

11-5 SUB TIME CODE RECORDING AND PLAYBACK

In addition to the main time code used for editing, this unit can also record (and play back) an optional sub time code in the time code data area on the tape.

Recording sub time code

- In the sub time code sector, you can record either the same data as in the main time code or the VITC time code received through the VIDEO IN connector.

Notes
- When menu switch No. 450 is set to ON (1)
  The sub time code is regenerated with the VITC signal superimposed on the video signal from the VIDEO IN connector.

1. Select data to be recorded on the sub time code.
- Menu switch No. 450 SUB TC (VITC) REC

OFF (0): "00:00:00:00" is always recorded on the sub timecode.
ON (1): Records the VITC received from the VIDEO IN connector on the sub time code.
Initial setting: ON (1)

2. Record the sub time code.
Press the PLAY button while pressing the REC button.
The selected time code will be recorded.

Play back the sub time code.

- Sub time code data is output through the VIDEO OUT connector as a VITC time code signal superimposed on the video signal.

- TC OUT connector output
  No sub time code data is output through the rear panel TC OUT connector. Only main time code is output from this connector.

1. Enable sub time code playback.
- Set menu switch No. 451 VITC OUTSEL to SUB TC (0).
  Factory setting: TC (1)

2. Play back the sub time code.
Press the PLAY button.
= Sub time code data is output through the VIDEO OUT connector as a VITC time code signal superimposed on the video signal.
Sub time code data (indicated with SUB) is shown with the main time code on the on-screen display.

Time Code Signal Flow

Time code data flow depends on the setting of the menu switch or the [INT/EXT] switch.
Use this as a reference for switch setting.

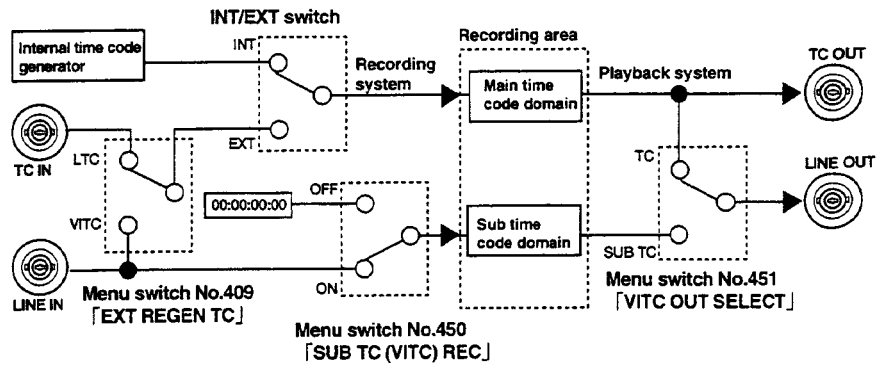

11-6 TIME CODE SWITCH SETTING FOR EDITING

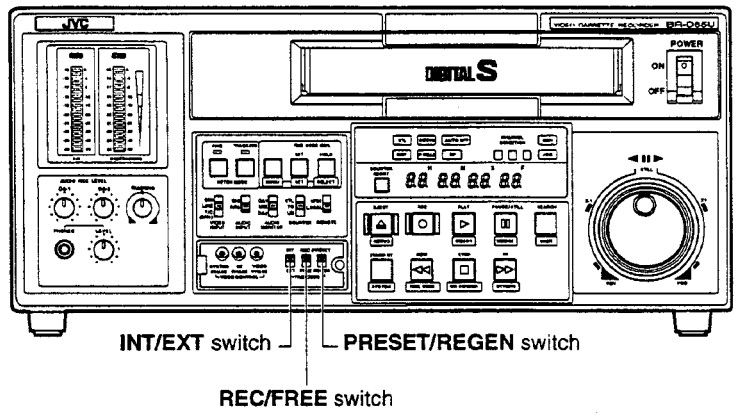

- **Set the switches on the BR-D85U (recording VCR) as follows.**

  Front panel switch setting

  - INT/EXT switch: Set to INT.
  - REC/FREE switch: Set to FREE.
  - PRESET/REGEN switch: Set to PRESET.
  - Set the menu switches as required.

- **Send an external sync signal to the VIDEO REF IN connector for editing.**

  Deliver a black burst or a standard color signal as an external sync signal.

Note
If there is no external sync signal generator available, send a video input signal to the VIDEO REF IN connector on the recording VCR.

12 EDITING SYSTEM PHASE ADJUSTMENT

To ensure accurate, error-free editing with an AB roll editing system or any other multiple-unit system, you must adjust the phase of the built-in time base corrector (TBC) after connecting all system components.
Phase adjustment must be updated each time you replace a connection cable, add or replace one of the units, or make any other changes.

12-1 CONNECTION

Connection

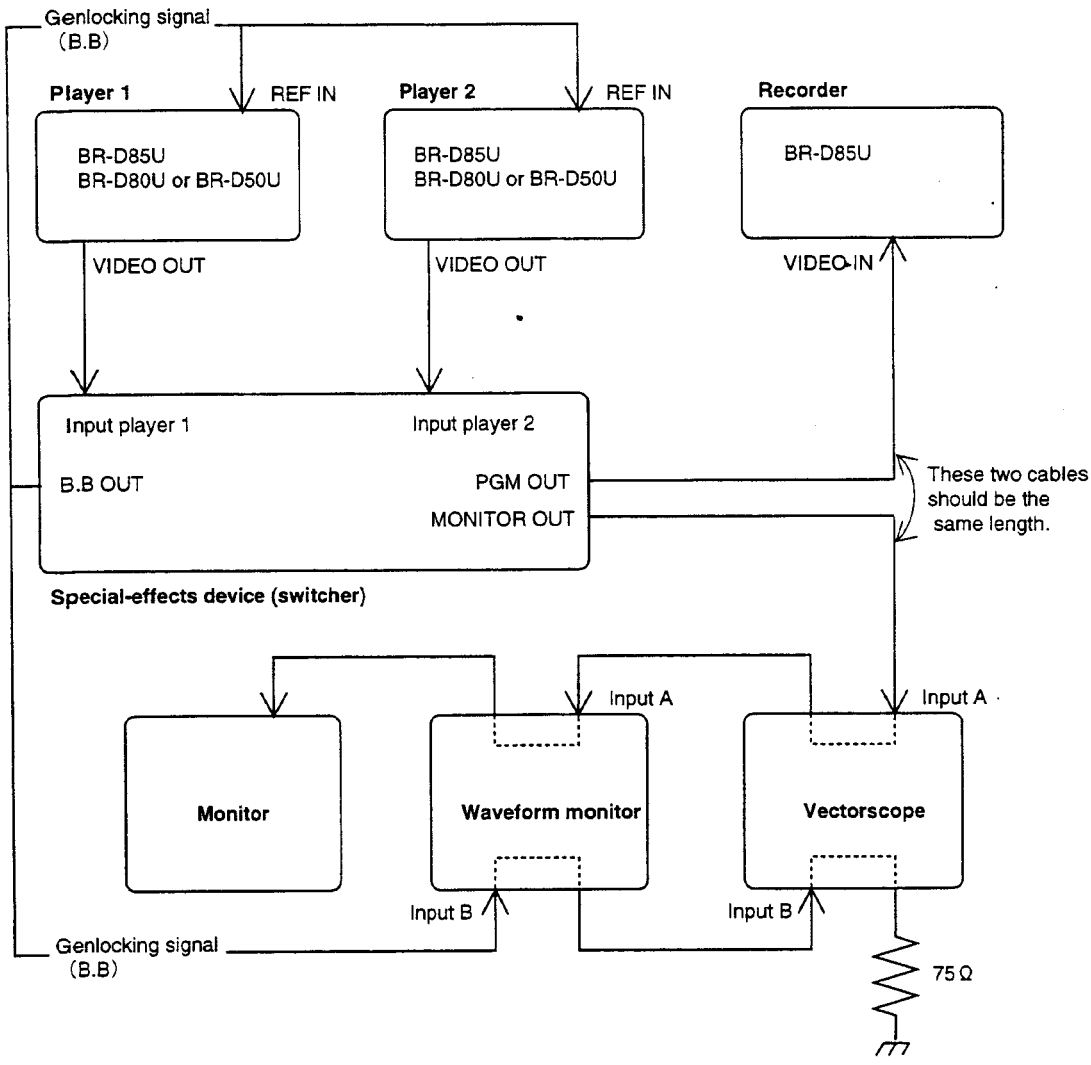

① Send external reference sync signals from the sync signal generator to the system components.

② Composite video signals are delivered as video signals.

* When editing on directly connected VCRs without a switcher, adjustment of system and subcarrier phases is not necessary.

12-2 UNIT-BY-UNIT AJUSTMENT

Color deviation occurs on the recording VCR when the players have different video levels, chroma levels, chroma phases and setup levels. Adjust these levels on each of the players separately. This can be done with the optional RM-G22JX TBC remote control unit.

1. Play back a cassette tape with standard color signals recorded on it.

2. Adjust the knobs so that the displays on the waveform monitor (WFM) and the vectorscope (VSC) appear as illustrated below.

■ Waveforms on the WFM

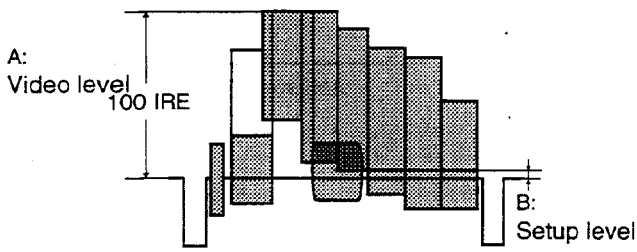

A: Video level
Adjust to 100 IRE.
B: Setup level
Adjust against deviation.

■ Waveforms on the VSC

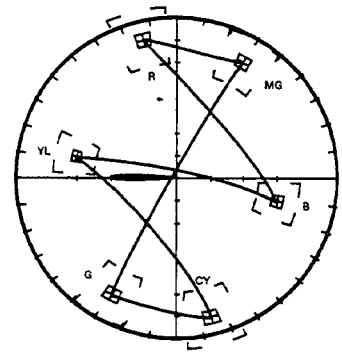

C: Chroma level/phase
Adjust the two knobs so that the lighting point of each vector waveform is located within the ⊞ mark.

12-3 PHASE AJUSTMENT

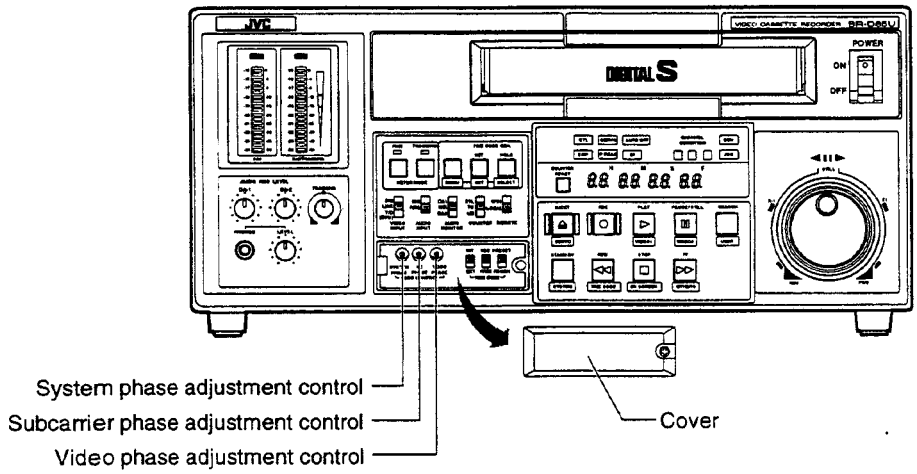

Preparation

- Remove the front cover with a Phillips screwdriver.
- To adjust the video phase, set menu switch No. 110 VIDEO PHASE to VARIABLE (1).

Perform subcarrier phase adjustment after the system phase has been adjusted.

System phase (SYSTEM PHASE) adjustment

System phase adjustment matches the VCR's blanking phase with the switcher's correct blanking phase. Switch between the switcher reference signal and the input VCR signal and adjust until there is no change in phase position. Without this adjustment, video distortion occurs after completion of fading during switching.

Waveforms on a waveform monitor
The WFM enlarges in 0.1 µsec.

Fig.

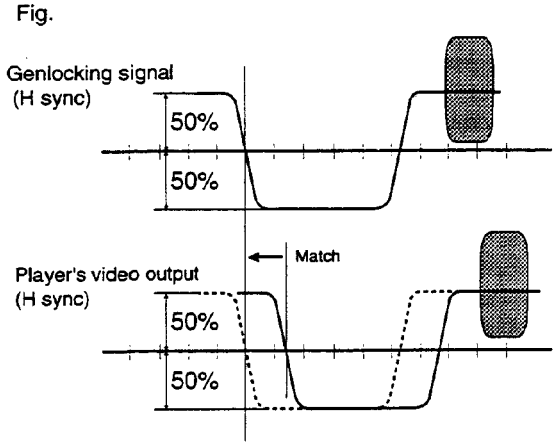

(Pay attention to sync fall)

Phase setting for genlocking signal

1. Set the waveform monitor (WFM)'s input to B and synchronize with input B. Set the H sync position with the WFM's H POSITION volume control to 50% of the H sync level. (Refer to the upper figure on the left.)

Adjustment of Player 1

2. Select Player 1 with the special-effects device (switcher).
3. Play back the reference color bar on Player 1.
4. Set the WFM's input to A and synchronize with input B. Set the [SYSTEM PHASE] volume control of Player 1 to the same H sync position as step 1 by turning it with a minus screwdriver. (Refer to the lower figure on the left.)

Adjustment of Player 2

5. Select Player 2 with the special-effect device (switcher).
6. Repeat steps 3 and 4 to adjust the system phase of Player 2.

12 EDITING SYSTEM PHASE ADJUSTMENT

12-3 PHASE AJUSTMENT

Subcarrier Phase (SC PHASE) Adjustment

System subcarrier phase adjustment matches the VCR subcarrier with the reference subcarrier of the switcher. Adjust so that the reference subcarrier overlaps the VCR subcarrier.

Waveforms on the vector scope

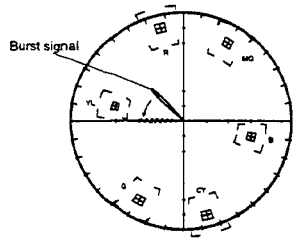

Fig. 1

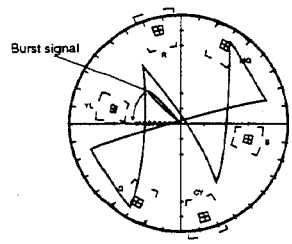

Fig. 2

Phase setting for genlocking signal

1. Set the vector scope's input to B and synchronize with input B. Adjust the phase of the burst signal to the reference line with the vector scope

Adjustment of Player 1

2. Select Player 1 with the special-effects device (switcher).
3. Play back the reference color bar on Player 1.
4. Set the vector scope's input to A and synchronize with input B. Adjust the phase of a burst signal to the reference line by turning the [SC PHASE] volume control of Player 1 with a minus screwdriver. (Refer to Fig. 2 on the left.)

Adjustment of Player 2

5. Select Player 2 with the special-effects device (switcher).
6. Repeat steps 3 and 4 to adjust the subcarrier of Player 2.

* • Adjustment of the KM-D600 switcher is not necessary as it is self-adjusting.
• Adjustment of the KM-3000 switcher is not necessary as it is a component switcher.

Video phase (VIDEO PHASE) adjustment

The video phase determines where a picture is located with respect to the sync signal. You can adjust this using the same waveform monitor used for system phase adjustment. Set the WFM reference sync to INT and adjust while observing blanking until no part of the VCR picture is missing in the rising section.
If you're not using a waveform monitor, wipe the picture with the switcher reference signal and adjust until the entire picture can be seen on the monitor.

Fig.

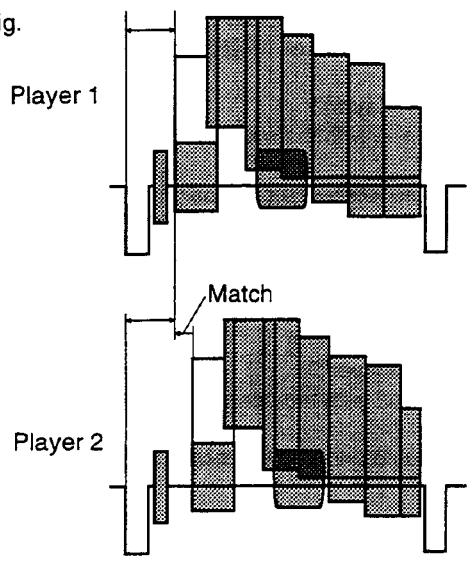

(WFM: Inside reference sync signal)

1. Set menu switch No. 110 "VIDEO PHASE" to "VARIABLE (1).

Adjustment of Player 1

2. Select Player 1 with the special-effects device (switcher).
3. Play back the reference color bar on Player 1.
   * If a reference color bar is not available, play back recording of a color bar.
4. Set the WFM's input to A and synchronize with input A. Adjust the video phase by turning the [VIDEO PHASE] volume control of Player 1 with a minus screwdriver so that none of the image is missing. (Refer to the upper figure on the left.)

Adjustment of Player 2

5. Select Player 2 with the special-effects device (switcher).
6. With the WFM's input set to A and input A synchronized, adjust the video phase by turning the [VIDEO PHASE] volume control of Player 2 with a minus screwdriver in the same way as step 4. (Refer to the lower figure on the left.)

13 TROUBLESHOOTING

13-1 WARNINGS WITH INDICATORS

This machine features self-diagnostic circuitry which allows it to detect and report any malfunctions that may occur. When a malfunction is detected, the cause will be shown on the monitor display and on the VCR's counter display. The warning code system consists of a main code (the code number) and a sub code (verbal description), e.g. 02 1 CONDENSATION ON DRUM. The front panel AUTO OFF indicator will normally be illuminated.

* When the AUTO OFF indicator is illuminated, the unit is no longer operable. The AUTO OFF indicator can be canceled by turning the power off and on again. If the indicator remains lit even after turning the power off and on, malfunctions other than 02 1 are possible. Consult your local JVC dealer.

Warning messages on the on-screen display

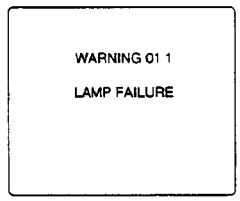

Warning messages on the counter display

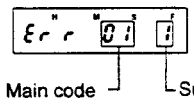

Refer to "1.8 WARNING DETECTION CIRCUIT" in Page.1-24 of the service manual.

As this unit uses a microcomputer, it may not function correctly due to noise from outside or interference noise. In this case, unplug the power cord and plug it again. Then, check the operation.

Warning code	On-screen display	Warnincode information	Behavior and actions to be taken
01 1	LAMP FAILURE	Tape sensor LED broken.	Behavior: Stops, with no operation possible. Action: Turn the power off and then on.
02 1	CONDENSATION ON DRUM	Condensation on drums.	Behavior: Cassette ejected and drum begins to rotate. When condensation is eliminated, the indicator goes out and cassette can be loaded. Action: Leave the power ON and wait until the waraning message goes out.
08 1	SUP TENSION FAILURE	Tape tension abnormal.	Behavior: Stops, with no operation possible. Action: Turn the power off and then on.
32 1~ 32 2	FAILURE IN LOADING	Tape loading not possible.	Behavior: Cassette ejected. Action: Load the cassette again.
33 1~ 33 2	FAILURE UN LOADING	Tape unloading not possible.	Behavior: Stops, with no operation possible. Action: Turn the power off and then on.
40 1	CASSETTE INSERT FAILURE	Cassette insertion abnormal.	Behavior: Cassette ejected. Action: Load the cassette again.

13 TROUBLESHOOTING

13-1 WARNINGS WITH INDICATORS

Warning code	On-screen display	Warnincode information	Behavior and actions to be taken
41 1	CASSETTE EJECT FAILUR	Cassette does not come out in Eject.	Behavior: Stops, with no operation possible. Action: Turn the power off and then on.
56 1~ 56 7	TAPE DEFECTIVE	Tape defect. Tape loose	Behavior: Cassette ejected. Action: If no abnormality is found in tape, reload the cassette.
57 1~ 56 7	END LEADER DETECTION	Tape end sensor abnormal.	Behavior: Tape is rewound. If tape end is still detected 3 seconds later, cassette is ejected. Action: Reload the cassette.
58 1~ 58 2	BEGIN LEADER DETECTION	Tape beginning sensor abnormal.	Behavior: Tape is fast-forwarded. If tape begin is still detected 3 seconds later, cassette is ejected. Action: Reload the cassette.
70 1	DRUM MOTOR FAILURE	Drum stops motion.	Behavior: Stops, with no operation possible. Action: Turn the power off and then on.
71 1	CAPSTAN MOTOR FAILURE	Capstan stops its motion.	Behavior: Stops, with no operation possible. Action: Turn the power off and then on.
72 1~ 72 6	SUP REEL MOTOR FAILURE	Supply reel motor motion abnormal.	Behavior: Stops, with no operation possible. Action: Turn the power off and then on.
73 1~ 73 5	TU REEL MOTOR FAILURE	Takeup reel motor motion abnormal.	Behavior: Stops, with no operation possible. Action: Turn the power off and then on.
80 1~ 80 7		Signal communication between VCR's micro-processors abnormal.	Behavior: Only warning indicator is active. Action: Consult your local JVC dealer. ↓ **Refer to "1.8 WARNING DETECTION CIRCUIT" in Page.1-31 of the service manual.**
81 1~ 81 2		Signal communications in VCR abnormal.	
82 1~ 82 5		EEPROM signal communication in VCR abnormal.	
83 1~ 83 1		Incomplete PC board installation.	
84 1	SYSCON REF FAILURE	System controller reference signal failure.	
85 1	MECHA.SERVO REF FAILURE	Mechanical controller reference signal failure.	
86 1	TC REF FAILURE	Time code reference failure.	
90 1		Abnormal digital video bus.	
91 1~ 91 8		* Abnormal input/output serial digital signal.	* Serial digital signals are used in conformity with SMPTE259M for video and with AES/EBU for audio.
C0 1~ C1 9		Abnormal mechanical operation.	

13-3 TROUBLES NOT TO BE WARNED BY INDICATORS

Symptoms	Cause	Action
Not operable	• REMOTE switch set to 9 PIN • Menu switch No. 002 OPERATION LOCK set to ON • Menu setting mode entered	• Set REMOTE switch to LOCAL. • Set Menu switch No. 002 OPERATION LOCK to OFF. • Press MENU button to restore normal mode.
Not recordable	• Protective slider on the cassette not at REC • Menu switch No. 351 PRE READ is set to ON.	• Set cassette's protective slider to REC. • Set menu switch No. 351 PRE READ to OFF.
Playback impossible	• S-VHS/VHS cassette in use	• S-VHS/VHS cassette not acceptable
On-screen display does not come up	• Monitor not connected to VIDEO MONITOR OUT • Menu switch No. 500 ON-SCREEN DISPLAY set to OFF	• Connect monitor to VIDEO MONITOR OUT. • Menu switch No. 500 ON-SCREEN DISPLAY to ON
Component input signal not recordable	• Menu switch No. 109 VIDEO INPUT set to Y/C	• Set Menu switch No. 109 VIDEO INPUT to CPN.
YC358 input signal not recordable	• Menu switch No. 109 VIDEO INPUT set to CPN	• Set Menu switch No. 109 VIDEO INPUT to Y/C.
Noise appears on part of the playback picture.	• Menu switch No. 005 AUTO TRACKING set to OFF. • Menu switch No. 112 ECC MODE set to NO CONCEAL or NO CORRECTION	• Set Menu switch No. 005 AUTO TRACKING to ON. If noise appears when set to ON, set to OFF and perform manual tracking adjustment. • Set Menu switch No. 112 ECC MODE to NORMAL.
Tape counter does not run.	• CTL counter does not run on a non-recorded section of the tape as no CTL signal is recorded on such a section. • Counter is in Menu switch setting mode.	• Press MENU button and enter Tape counter mode.
Tape stops during FF or REW running.	• When Menu switch No. 326 COUNTER MEMORY is set to ON, CTL counter stops near 0:00:00:00.	• Set Menu switch No. 326 COUNTER MEMORY to OFF.
Tape is ejected.	• S-VHS/VHS cassette tape is used.	• S-VHS/VHS cassette cannot be used.
Menu setting cannot be changed.	• Menu switch No. 00D MENU LOCK is set to ON.	• Set menu switch No. 00D MENU LOCK to OFF.

14 APPENDIX

14-1 OPTIONAL ACCESSORIES

Rack Mount Adapter SA-K67

SA-K67 is a rack mount adapter used to mount the BR-D85U on a 19" EIA standard rack.

■ **Mount rail & bracket**

When mounting the unit on a rack with the SA-K67, a mount rail and mount bracket are also required.
Recommended models:

- Acuryde Co., Ltd. 2038-22 (mount rail)
  BK2038 (bracket)

■ **Installation**

1. Secure the rack mount adapter to the VCR with 6 M4 screws.
2. Secure the slide rail inner member to the VCR with 6 M4 screws.
3. Mount the slide rail outer members on the front and rear ends of the rack using the bracket.
4. Pull out the rails in the slide rail outer members until you hear a click.
5. Fit the right and left slide rails on the VCR into the pulled-out rails and push them in together. The rails will be blocked by right and left springs, so press the springs with your fingers and push the VCR further in.

Precautions

- Do not use screws 8 mm or longer to secure the rack mount adapter and slide rail inner members to the VCR, as doing so may damage the printed circuit boards inside the VCR.
- The handle on the rack mount adapter is only for sliding the VCR in and out. Do not lift the VCR with this handle.
- When installing the VCR in a rack, make sure there is sufficient clearance above and below the VCR for heat radiation.
- Some racks may require that you mount the slide rails in a particular way. If you have any questions, consult the rack dealer.

RM-G22JX TBC Remote Controller

To adjust the TBC in the BR-D85U.

YC Video Cables

The following cables are available for Y/C358 video signal connection.

Model	Units for connection		
	Output	Input	Length
VC-G30U	4-pin	4-pin	3 m
VC-G50U	4-pin	4-pin	5 m
VC-G3030	4-pin	7-pin	3 m
VC-G2030	7-pin	4-pin	3 m
VC-G2050	7-pin	4-pin	5 m

15 SPECIFICATIONS

● General		
Format		Digital S
Tape width		12.65 mm
Tape speed		57.737 mm/sec
Signal format		NTSC standard
Dimensions		429 (W) x 188 (H) x 567 (D) mm
Weight		Approx. 25 kg
Power consumption		Approx. 175 W
Power supply		AC 120 V 50/60 Hz
Record/Play time (w/DS-104)		(Record/Play) Approx. 104 min.
REW/FF time (w/DS-104)		Approx. 3 min.
Operating temperature		5 to 40°C
Storage temperature		–20 to 60°C
Operating humidity		30% to 80%RH
● Video signal		
Input	Composite	1 Vpp 75 ohms, unbalanced
	YC 358	Y:1Vp-p/C:0.286 Vp-p 75 ohms, unbalanced
	Component	Y:1Vp-p /R-Y, B-Y:0.7 Vp-p 75 ohms, unbalanced
	Serial digital	Conformity with SMPTE259M 75 ohms, unbalanced 270Mb/sec
Output	Composite	1Vp-p 75 ohms, unbalanced
	YC 358	Y:1Vp-p /C:0.286 Vp-p 75 ohms, unbalanced
	Component	Y:1Vp-p /R-Y, B-Y:0.7 Vp-p 75 ohms, unbalanced
	Serial digital	Conformity with SMPTE259M 800mVp-p ±10% 75 ohms, unbalanced 270Mb/sec
External sync input		0.286 Vp-p, 75 ohms, unbalanced
Sampling frequency		Y: 13.5 MHz, R-Y/B-Y: 6.75 MHz
Quantization		8 bits
Frequency range		Y:0-4.0 MHz + 1.0 dB/-1.5 dB (analog component in/out) R-Y/B-Y: 0-2 MHz + 1.0 dB/- 1.5 dB
S/N		More than 50 dB (analog composite in/out) More than 52 dB (analog component in/out) More than 55 dB (digital in/analog component out)
● Audio signal		
Input	Line input	–6/+4 dBs high impedance, balanced
	Digital audio	Conformity with AES/EBU 1Vp-p 75 ohms, unbalanced
Output	Line output	–6/+4 dBs low impedance, balanced
	Digital audio	Conformity with AES/EBU 1Vp-p 75 ohms, unbalanced
	Monitor output	–6 dBs low impedance, unbalanced
	Headphone	- ∞ to -17 dBs, 8 ohms
Sampling frequency		48 kHz
Quantization		16 bits
No. of channels		2
Frequency response		20 Hz to 20 kHz
Dynamic range		85 dB or more
Wow & Flutter		Below a measurable value
● Time code	Input	0 ± 6 dBs high impedance unbalanced
(LTC)	Output	0 ± 3 dBs low impedance unbalanced
● Accessories		Power cable x 1

15 SPECIFICATIONS

DIMENSIONS

Unit: mm

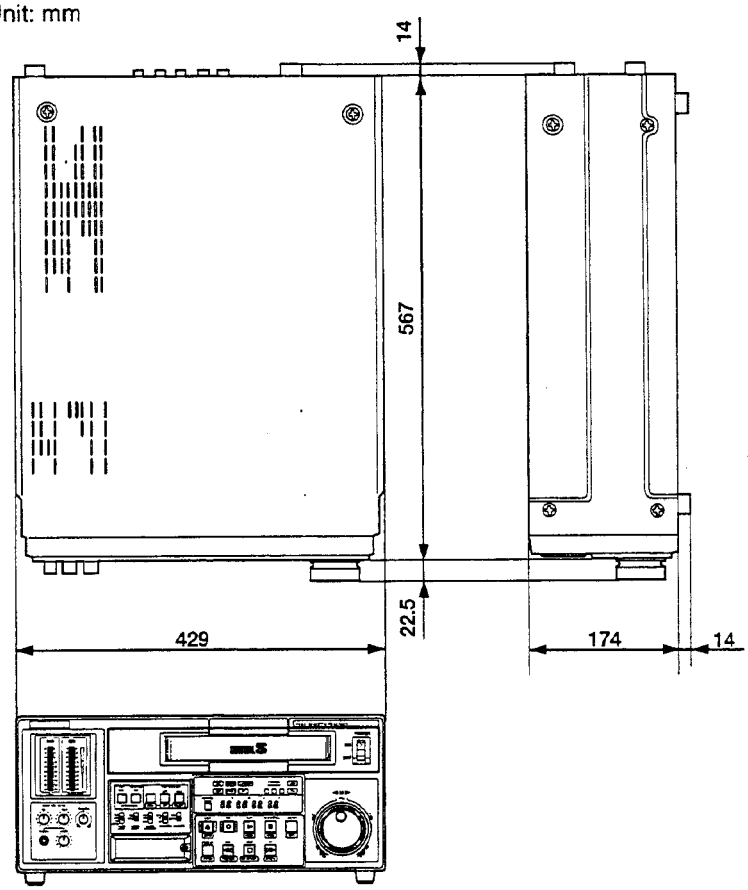

Design and specifications subject to change without notice.

SECTION 1

SERVICE CAUTIONS AND DISASSEMBLY

Contents

1.1 INTRODUCTION TO DIGITAL S FORMAT 1-1
1.1.1 General statement 1-1
1.1.2 DIGITAL S cassette tape 1-2
1.1.3 Recording system and tape format 1-3
1.1.4 Drum assembly 1-5
1.1.5 Video system 1-6
1.1.6 Audio system 1-9
1.2 REMOVING OF OUTER COVERS 1-11
1.2.1 Top cover 1-11
1.2.2 Side cover 1-11
1.2.3 Front panel assembly 1-11
1.2.4 Bottom cover 1-11
1.3 REMOVING OF MAIN P.C. BOARDS 1-12
1.3.1 Removing of board belonging to Group B 1-13
1.3.2 Removing of board belonging to Group C 1-13
1.3.3 Removing of board belonging to Group D 1-13
1.3.4 Removing of board belonging to Group E 1-14
1.3.5 Removing of board belonging to Group F 1-14
1.3.6 Removing of board belonging to Group G 1-14
1.4 EXPLANATION OF INTERNAL SWITCHES ON BOARDS 1-15
1.4.1 Function of each switch 1-15
1.5 MANUAL EJECTION OF CASSETTE TAPE IN AN EMERGENCY 1-16
1.5.1 When tape is in unloading condition: 1-16
1.5.2 When the set is in "AUTO OFF" mode though tape is slack 1-16
1.5.3 When tape is still in loading condition (1): 1-16
1.5.4 When tape is still in loading condition (2): 1-16
1.6 HOUR METER AND VERSION INDICATION 1-17
1.6.1 Outline 1-17
1.6.2 Operation 1-17
1.7 SERVICE MODE 1-18
1.7.1 Outline 1-18
1.7.2 Calling of SERVICE MODE 1-18
1.7.3 Setting of SERVICE MENU SWITCHES 1-19
1.7.4 Method to register setting of MENU SWITCH 1-21
1.7.5 Method to call up setting of MENU SWITCH 1-21
1.7.6 Method to reset MENU SWITCH to initial setting on shipment 1-21
1.7.7 Method to reset HOUR METER 1-21
1.7.8 Method to reset operation times 1-21
1.7.9 Method to save and call up M/S EEPROM data 1-21
1.7.10 Method to clear warning records 1-21
1.7.11 Method to call up warning records 1-22
1.8 WARNING DETECTION CIRCUIT 1-24
1.8.1 Outline 1-24
1.8.2 Table of warning codes 1-24
1.9 TEST MODE 1-34
1.9.1 Accessing to test mode 1-34
1.10 SELF-DIAGNOSIS MODE 1-35
1.10.1 Way of accessing self-diagnosis mode 1-35
1.10.2 Explanation of error messages 1-35
1.10.3 OPERATION LED CHECK mode 1-36
1.10.4 OPERATION VR/DIAL CHECK mode 1-36
1.10.5 Self-diagnosis of PV PROCESS circuit 1-36
1.10.6 Self-diagnosis of AUDIO circuit 1-36
1.10.7 LTC LOOP CHECK mode 1-37
1.10.8 VITC LOOP CHECK mode 1-37
1.10.9 Error sub-code indications 1-37

SECTION 1
SERVICE CAUTIONS AND DISASSEMBLY

1.1 INTRODUCTION TO DIGITAL S FORMAT

With remarkable progresses in LSI technology and digitization technology, the audio-visual field is greeting the advent of the multimedia age. In those circumstances, every audio-visual company has made proposal concerning new digital VTR with data compression function, non-linear editing system, new technologies for collecting data, editing, data transmission, and so on. Of course, JVC has released "DIGITAL S" format that is developed as a professional digital VTR format for the multimedia age.

1.1.1 General statement

1. Outline of DIGITAL S VTR and cassette tape

The DIGITAL S format provides that high density MP (metal powder) cassette tape is the standard. This cassette is the same as the S-VHS/VHS cassette in size but different in the structure, in short, its dust-proof structure is noticeably reinforced as compared with the S-VHS/VHS cassette and it cannot be inserted into S-VHS/VHS deck.
The mechanism of the DIGITAL S VTR is designed based on the professional S-VHS deck (S800, S22 series, etc.), and the improved tape travel system realizes maximum 104-minutes recording at the tape travel speed of 57.7 mm/sec.
The rotational frequency of the drum is 4,500 rpm, and its 2-track parallel recording system splits video data to record data for 1 frame on 10 tracks. Recording on a track is performed at an azimuth of ±15° for controlling crosstalk with neighboring tracks. The editing VTR (BR-D85U/D80U) is equipped with flying erase heads to realize fine editing at a unit of frame.
The S-INRZI/24-25 modulation system is adopted for modulating recording signal. Regarding recording density, track pitch is 20 μm, minimum recording wavelength is 0.587 μm, and recording frequency is 49.5 MHz. For error correction system, the Read-Solomon product coding is used for demonstrating satisfactory correction ability. Moreover, the paired-head construction of the DIGITAL S VTR assures high reliability because either of paired heads can substitutionally plays back data for the other if one of a pair breaks down.
For tracking servo, control signals (1 pulse for 1 frame) on the linear track is used as same as professional S-VHS decks.

2. Main features of DIGITAL S VTR

1) High quality picture produced by component digital compression recording system
   - High density recording is realized by newly developed 1/3.3 low rate data compression system.
   - 8-bits (4:2:2 components) quality picture

     The DIGITAL S VTR is excellent in reproducing detail portion of image besides its merits of good S/N ratio, frequency characteristic and pulse characteristic. Moreover, the digital recording system not only hardly deteriorates picture quality regardless of repeated dubbing but also maintains the original performance for a considerably long time.
2) High tone quality by digital 4-channel PCM recording
   - 16-bit, 48 kHz digital recording realizes high tone quality.
   - Individual channel insert editing is possible.
     Fine editing and dubbing can be performed with high tone quality owing to excellent editing characteristic of PCM recording.
3) Adoption of high density MP (metal powder) tape
   In spite of the same cassette size as S-VHS/VHS cassette, the high density MP cassette tape and the high density recording system realize long-time recording for 104 minutes at maximum.
4) Wide application for building up various systems
   The DIGITAL S VTR is connectable with all kinds of signal formats currently in use (analog composite, component, Y/C, serial digital signals, etc.), moreover, it is capable of re-editing material tapes that are recorded by conventional systems in the DIGITAL S format.

VTR format		DIGITAL S
Tape	Material	MP(metal powder)
	Width	1/2 inch
	Recording system	Component recording, 4:2:2
Video	Data compression	Intra-frame DCT(1/3.3)
	Number of bits	8
Audio	Number of channels	4
	Number of bits	16
Track pitch		20 μm
Tape speed		57.737mm / sec
Drum diameter		62.0mm
Cassette size		188 × 104 × 25mm

Table 1-1-1(a)

1.1.2 DIGITAL S cassette tape

1. Specifications of DIGITAL S cassette tape

The DIGITAL S cassette tape is the same as the S-VHS/VHS cassette tape in size as shown in Fig. 1-1-2(a).

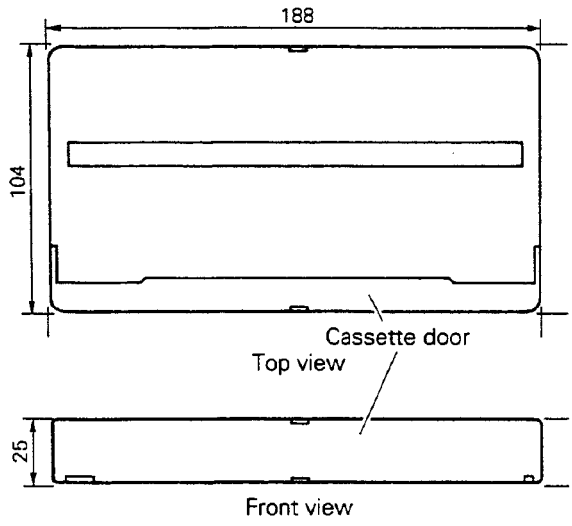

Fig. 1-1-2(a)

2. Main features

1) High-density metal tape is adopted.
Adoption of high-density MP (metal powder) tape realizes recording and playback of higher frequency band as compared with ordinary iron oxide tapes (VHS and S-VHS tapes). Moreover, the DIGITAL S cassette tape will be marketed at a more economical price compared with general cassette tapes for the digital VTR.
2) Double lid type dust-proof structure
Since the tape is sandwiched in the inner lids fitted to the inside of the guard panel (cassette door), the both sides of tape are prevented from getting dust and damaged whenever the cassette tape is in keeping.

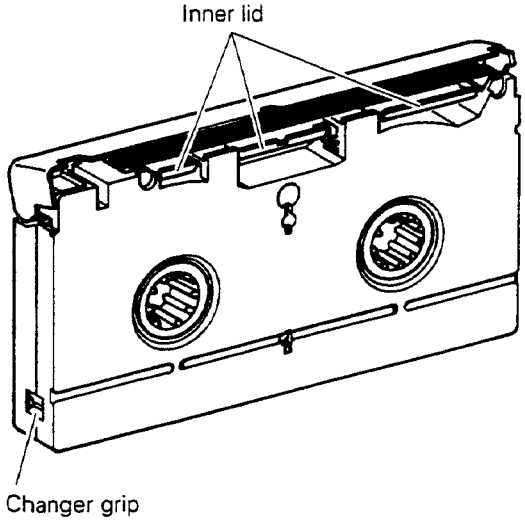

Fig. 1-1-2(b)

3) Miserasure prevention by sliding tab
Differently from the miserasure prevention mechanism of the S-VHS and VHS cassette tapes that need to break the REC safety tab for preventing recording from miserasure, the DIGITAL S cassette tape adopts the sliding tab for miserasure prevention. Therefore, the DIGITAL S cassette tape can repeatedly be used for recording.
4) Cassette discriminating mechanism
The DIGITAL S cassette tape is discriminated from the S-VHS and VHS cassette tapes by the cassette identification slot. This mechanism prevents insertion of DIGITAL S cassette tape into an S-VHS or VHS VTR.
5) Adoption of changer grip
The DIGITAL S cassette tape is fitted with a grip for cassette changer in a side of the cassette.

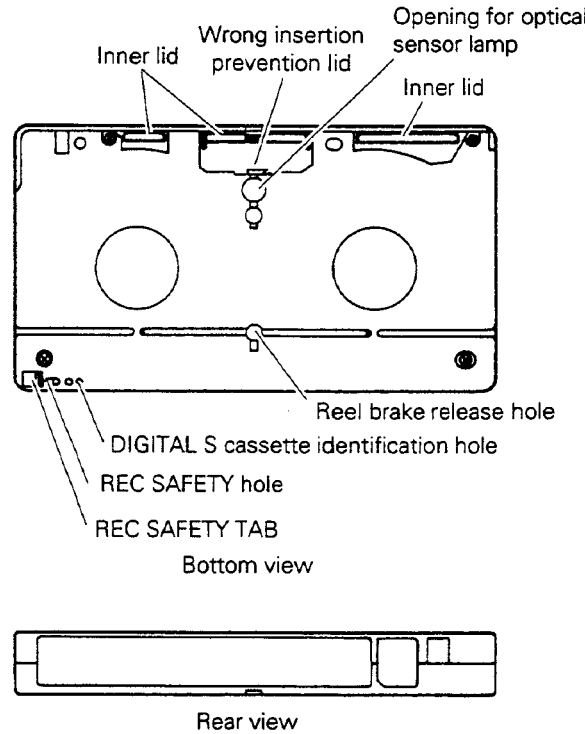

Fig. 1-1-2(c)

1.1.3 Recording system and tape format

1. Tape pattern

As viewed from the magnetic side, the tape pattern can be illustrated as Fig. 1-1-3(a).

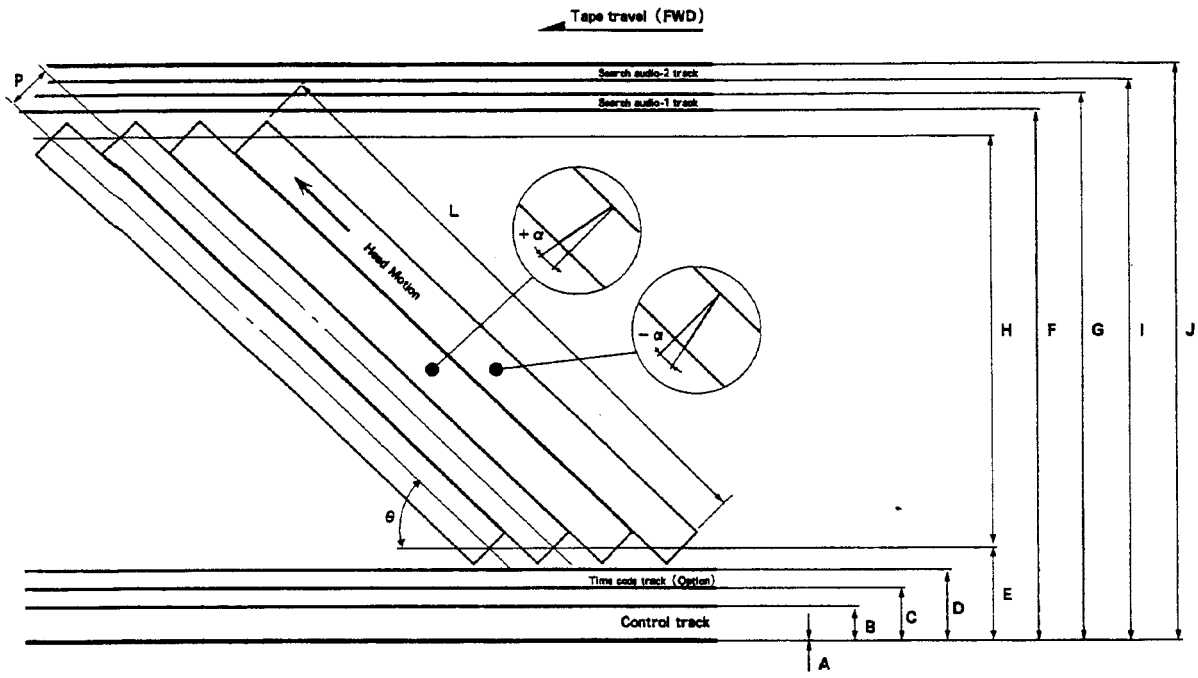

Fig. 1-1-3(a)

		DIGITAL S	VHS (SP)	Description
A	Control track lower edge [mm]	0.000	0.00	CTL signal is recored on linear track as same as VHS tape. (1 pulse for 1 frame)
B	Control track upper edge [mm]	0.750	0.75	
C	Time code track lower edge [mm]	1.150	–	Recording of time code (LTC) is possible. (This function is not yet adopted by the BR-D85/D80/D50.)
D	Time code track upper edge [mm]	1.550	–	
E	Helical track lower edge [mm]	1.700	(1.165)	
F	Search audio-1 lower edge [mm]	11.650	11.65	For confirming audio signal in Search mode : DIGITAL S For recording normal audio CH-1 (L-ch) : VHS
G	Search audio-1 upper edge [mm]	12.000	(12.00)	
H	Helical track width [mm]	9.244	10.07	
I	Search audio-2 lower edge [mm]	12.300	(12.30)	For confirming audio signal in Search mode : DIGITAL S For recording normal audio CH-2 (R-ch) : VHS
J	Search audio-2 upper edge [mm]	12.650	(12.65)	
L	Helical track total length [mm]	89.039	(96.829)	
P	Helical track pitch [mm]	20.0	58	
S	Program start [mm]	1.770		Standard of helical track height.
W	Tape width [mm]	12.650	12.65	
θ	Track angle [degree]	5.95892	5° 58' 9.9"	
α	Azimuth angle [degree]	15.0	6	Extended azimuth for processing wide band signal.
Ts	Tape speed [mm/s]	57.737	33.35	

Table 1-1-3(a)

2. Track pattern

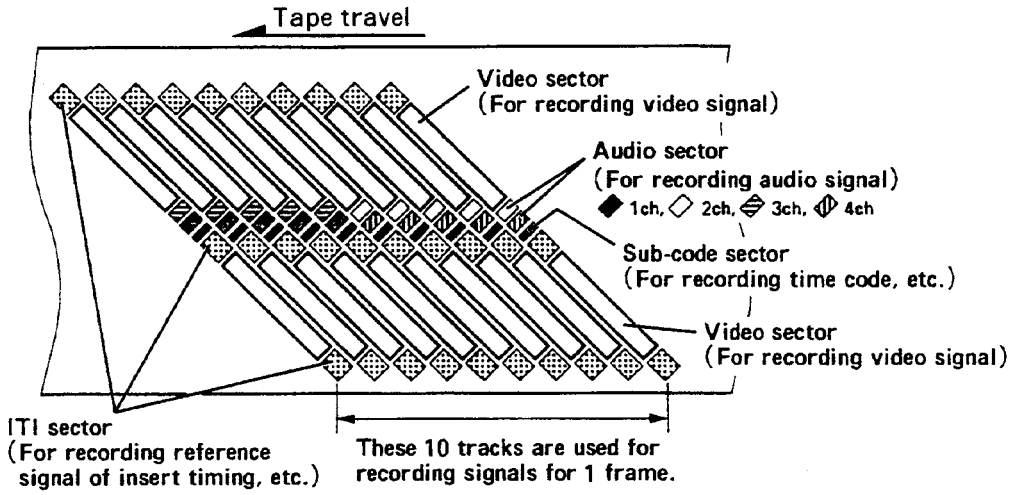

Fig. 1-1-3(b) Track pattern (1)

In the DIGITAL S format, one track is divided into eight sectors for recording different information. Three of them are used as the ITI sector, two are used as the audio sector, another two are used as the video sector, and the last one is used as the sub-code sector.
Moreover, there are edit gaps are recorded between respective two sectors for absorbing timing error that possibly occurs in editing.

Fig. 1-1-3(c) shows relation between video sectors of the 525/60 (NTSC) system and positions of video signals to be recorded on those sectors.
As shown in Fig. 1-1-3(c), (d) video signals for 1 frame are divided into twenty to be recorded on the allotted sectors respectively. For example, if signal of the sector ① of a frame is played back by the + azimuth head of CH1, the same sector of the next frame is played back by the + azimuth head of CH2. If one of paired heads is clogged, the other head in the opposite side catches the signal and the picture is played back by every other frame.

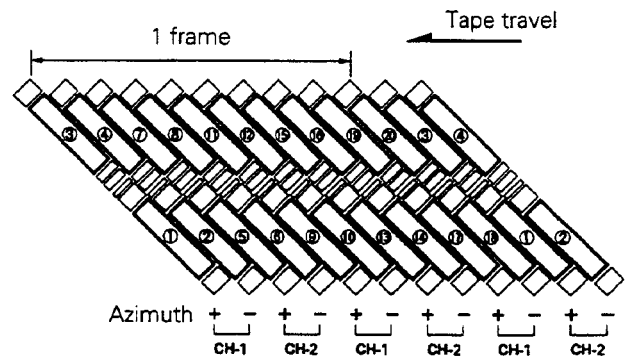

Fig. 1-1-3(c) Track pattern (2)

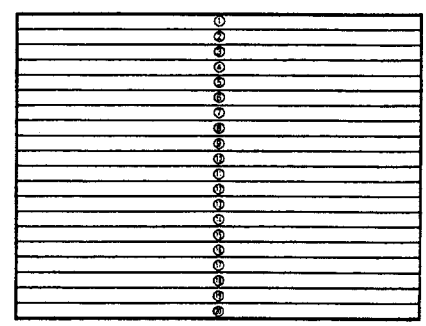

Fig. 1-1-3(d)

1.1.4 Drum assembly

1. Construction of drum assembly

The drum assembly is composed of a fixed upper drum, a rotary middle drum and a fixed lower drum. Since the sliding width of the rotary middle drum is narrow, it has the merit of stable contact between the head and tape. In other words, the rotary drum does not increase air insulation (air film) appearing at the drum entrance even when it runs at a speed 2.5 times as high (4500 rpm) as the VHS format.

Air film or air insulation means air stratum generated between the drum and tape by drum rotation. With increase of air film in thickness, contact between the drum and tape becomes unstable because air film isolates them from each other much more. The wider the sliding part is or the higher the drum rotation is, the thicker air film becomes.

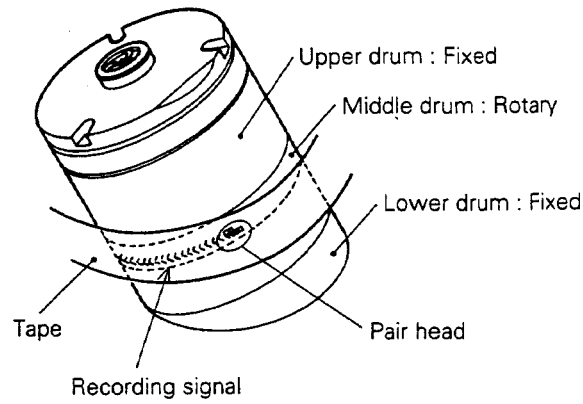

Fig. 1-1-4(a)

2. Construction of heads

The head construction of the BR-D85U/D80U is shown in Fig. 1-1-4(b). The REC and PB heads of the DIGITAL S VTR are constructed by pairs of heads that have different azimuth as shown in the figure, therefore, recording or playback for two tracks are carried out at a time. Since video data for one frame is divided into ten to be recorded on ten tracks respectively, the drum runs at a speed 2.5 times (4500 rpm) as high as the VHS system.

The pre-read editing function once outputs PB signal to the special effect device, etc. and it again records the processed signal on the same tape. For realizing this function, the PB heads are mounted approximately 1 mm (for 4 frames) higher than the REC heads.

Note: The pre-read recording function is incorporated in the BR-D85U only.

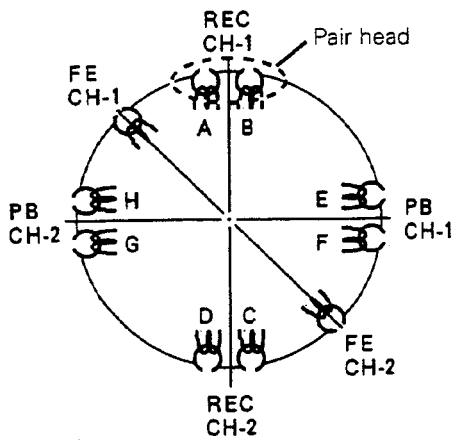

Fig. 1-1-4(b) Head construction (BR-D85U/D80U)

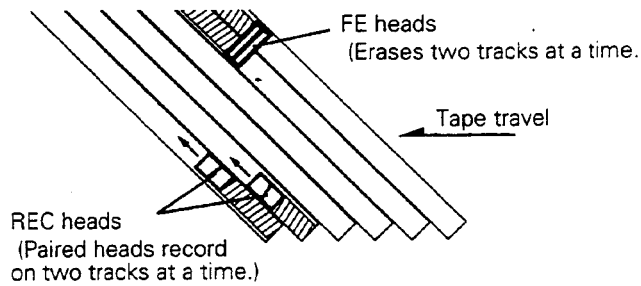

Fig. 1-1-4(c) Recording by paired heads

1.1.5 Video system

1. Signal flow

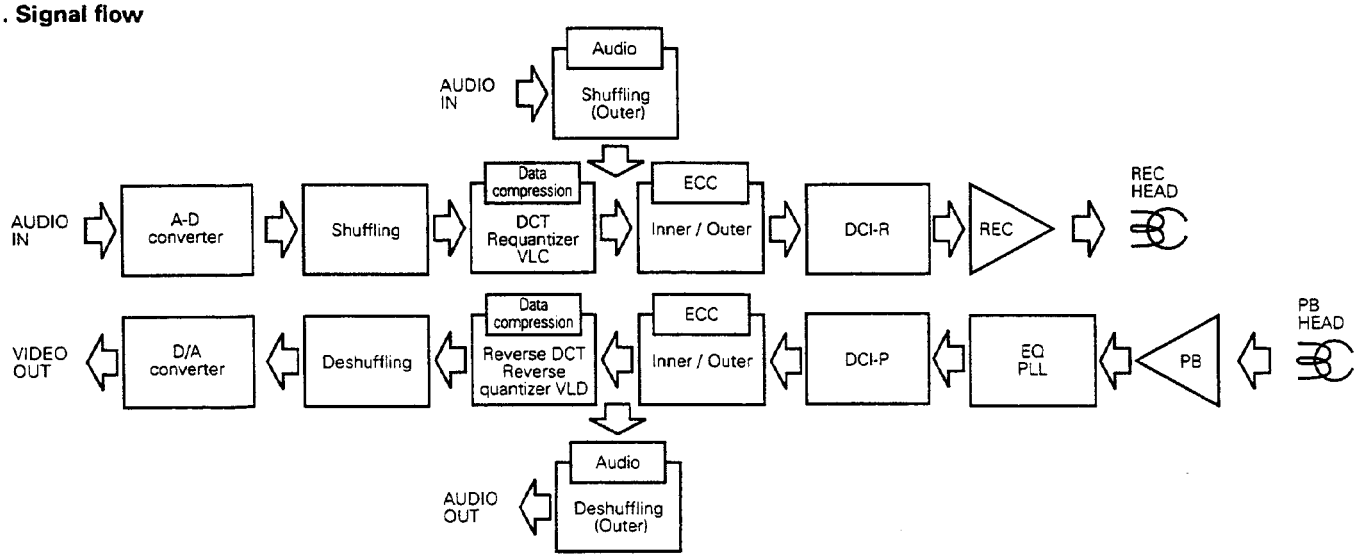

Fig. 1-1-5 (a) is a flowchart of video signal processing.

2. Function of each block

1) A-D converter
Since video signal is analog signal, the A-D converter functions to convert data of video signal into numerical value. Analog waveform is converted into numerical value by two factors of time axis and voltage. Splitting of time axis is called "sampling" while splitting of voltage is called "quantizing". The DIGITAL S system adopts the digital component (4:2:2) whose sampling frequencies are: Y = 13.5 MHz, R-Y/B-Y = 6.75 MHz, and quantized bits are 8 in number.
Since number of effective pixels is 720 (pixels) x 480 lines, quantity of data for 1 second is 166 Mbps (720[H] x 480[V] x 2[Y & C] x 8[bit] x 30[frame]).

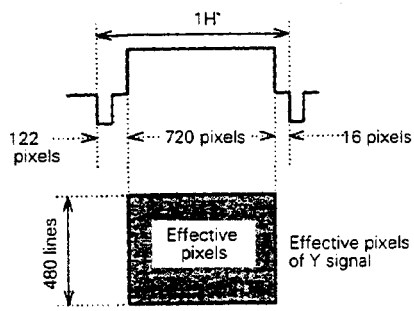

Fig. 1-1-5(b) Effective pixels

Quantized bit		8-bits
Sampling frequency	Y (luminance) signal	13.5MHz
	Color difference signal	6.75MHz
Number of effective pixels per line	Y (luminance) signal	720 pixels
	Color difference signal	360 pixels
Number of lines for REC/PB	Y (luminance) signal	482*
	Color difference signal	482*
Line range for REC/PB	Field 1	23~262
	Field 2	285~524

* 2 extra lines are included.

Table 1-1-5(a) Video signal processing flowchart

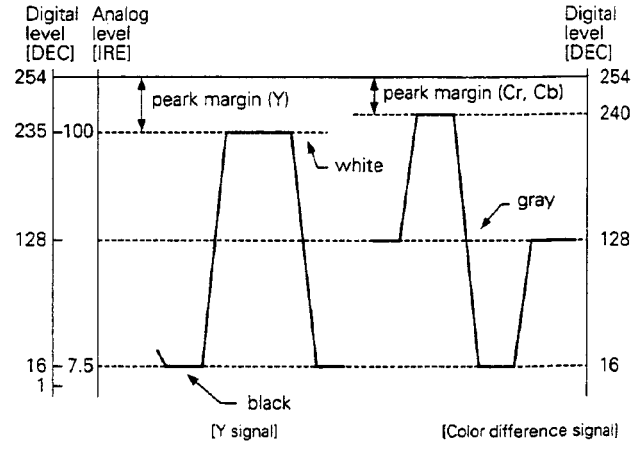

Fig. 1-1-5(c) Video sampling level

2) Shuffling

The purpose of shuffling is to distribute data contained in five macroblocks equally among them that are used as a unit of fixed length data as well as to make data distortion caused by compression inconspicuous. Concretely, five macroblocks that are unitized as mentioned below are collected from various points of a picture according to a prescribed rule for shuffling.

a) DCT block

Prior to shuffling, data for one frame is splitted into 8×8 pixel blocks (called DCT blocks), each of which is a basic unit of DCT. Since there is a difference in sampling frequency between Y signal and color difference signal, Y signal is splitted into 60(V) × 90(H) blocks while color difference signal is splitted into 60(H) × 45(H) blocks.

b) Macroblock

One macroblock is composed of four DCT blocks in the same position of a picture. Detail of four DCT blocks is two DCT blocks of Y signal and two DCT blocks of each color difference signal (Pb or Pr). Concealment of ECC is carried out at a unit of macroblock.

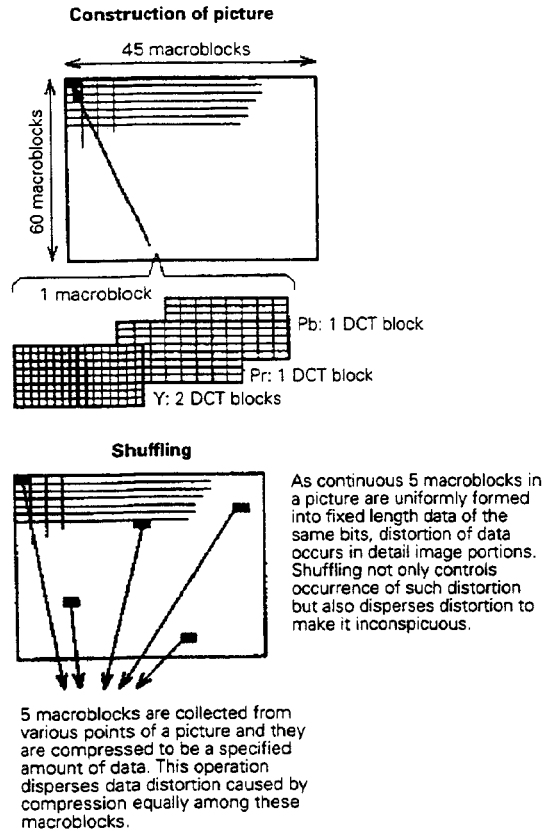

Fig. 1-1-5(d) Shuffling

3) Data compression

If video signals are converted into digital signals and converted data are recorded as they are, amount of recording data is so enormous that it needs data compression from viewpoints of recording time and tape consumption. TV screen consists of continuously moving scenes that are made up by 30 frames (NTSC) a second, and there is little difference between respective continuous frames. If only the frames whose data are different from preceding frames are recorded, recording data can theoretically be reduced. This video data compression system is called interframe (between-frames) coding, and MPEG1 falls under this system. Although this data compression system utilizing correlation between frames can raise compression rate, it needs video data on preceding frames for reproducing a frame. Such being the case, it is difficult to adopt the system utilizing correlation between frames for the DIGITAL S VTR, because it is required to have such functions as editing at a unit of frame and playback at variable speed. Therefore, the DIGITAL S VTR adopts the intraframe coding system that compresses video data within each frame. In this compression system, image of a frame is divided into minute blocks (macroblocks), and they are grouped at a unit of five macroblocks to be coded as fixed length video data. As a result, video data for one frame can be compressed not to exceed a certain number of bits calculated according to video recording rate. Concretely, video data is compressed into 50 Mbps or 1/3.3 (50/166 Mbps) by high degree mathematical processing such as DCT (Discrete Cosine Transform), requantization, VLC (Variable Length Coding).

a) DCT (Discrete Cosine Transform)

DCT is a mathematical transformation theory utilized for DC-AC conversion of pixel value into frequency area. Since there is redundant data between neighboring pixels, DCT transforms pixel value into frequency area by DC-AC conversion. As a result, widely dispersed signal power can be concentrated in low frequency components which can easily be compressed.

Transformation of video data by DCT is carried out at a unit of DCT block, and transformed data are scanned zigzag as shown by Fig. 1-1-5(f). Since a plenty of zero values are detected as a result of the above-mentioned zigzag scan, code length can be shortened by the run length coding to be mentioned later.

b) Requantization

Requantization reduces amount of video data with little deterioration in picture quality, because low frequency components which signal power concentrate in are quantized fine while high frequency components which signal power is not dispersed in are quantized roughly.

In the requantization process, DCT output is splitted into four areas, which are respectively quantized by different quantizing steps. Quantizing step for each area is determined so that total amount of data of 5 macroblocks collected by shuffling fits in the specified amount. However, DC components are not requantized because they are important data.

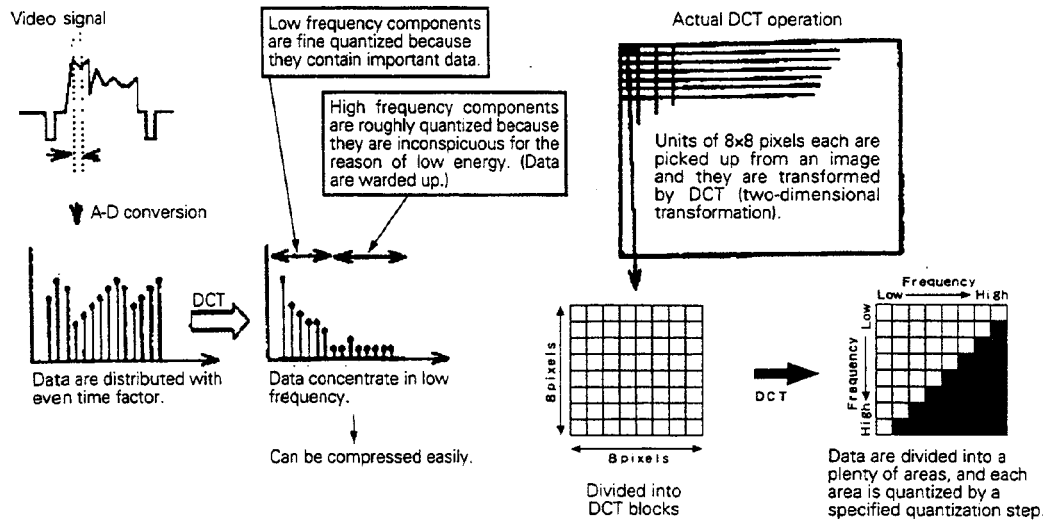

Fig. 1-1-5 (e) DCT and requantization

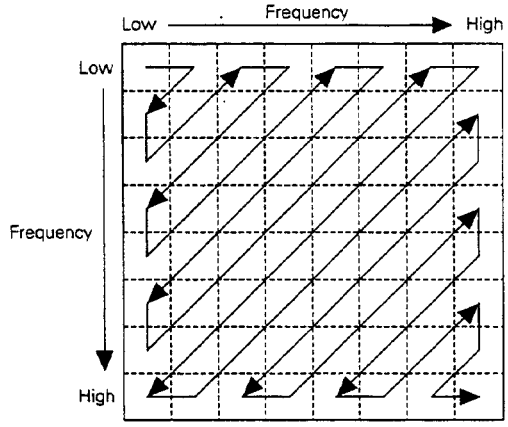

Fig. 1-1-5 (f) Zigzag scan

c) VLC (Variable Length Coding)
Average code length can be shortened as a whole by allotting short code to high frequent matters and long code to low frequent matters. This coding method is called Variable Length Coding (VLC). The variable length coding adopted for the DIGITAL S format is constructed based on the Haffman coding in combination with the run length coding.

- Run length coding
  The run length coding, which is an efficient method to code data of "0" that is apt to appear continuously, transforms data into groups which consist of continuous "0" data and data other than "0" following continuous "0" data.

- Haffman coding
  Haffman coding can shorten total code length because it allots short length code to frequently appearing groups (consisting of continuous 0's and following data other than 0) processed by the run length coding.

4) ECC (Error Correction Code)
If digitized recording signal is affected by noise, dust on tape or something other, PB signal may possibly differ from the recording signal. Therefore, digital VTR generally adds error correction code to recording signal and plays back the recording signal after correcting errors in recording signal by the correction code.
The DIGITAL S VTR adopts the Reed-Solomon product coding that demonstrates high ability to correct both random error and burst error (sequent errors) for the video and audio systems.
Video : Inner - RS (85, 77), Outer - RS (149, 138)
Audio : Inenr - RS (85, 77), Outer - RS (14, 9)
The first number in parenthesis shows code length and the second number shows amount of data. Difference between these two numbers corresponds to number of parities.
If error that cannot be corrected occurs in audio, it gives incongrous feeling to the listener as audio's peculiar characteristic. Therefore, redundancy of audio's outer parity is increased to raise the correction ability.

5) DCI
DCI rearranges video data, audio data and other data to be recorded on tape so as to meet the DIGITAL S format. As a result of this reformatting, video and audio data for a frame are divided into sectors by every 20 video data and every 5 audio data (for a channel).
Moreover, DCI modulates data of track format as mentioned below, and the modulated data are converted from parallel data to serial data before it is sent to the REC amplifier.

• Modulation (Channel coding)
Prior to recording of digital signal on tape, the recording data column is converted so that it conforms to the digital recording/playback system, however, operation of this conversion depends on the recording/playback characteristics of magnetic tape and machine being used, recording data rate, and so on.
Although rotary transformer is generally used as a means to send signal to the rotary drum in the digital VTR, it is weak in sending a digital signal that contains continuous "0" or "1" data because there are much DC components in such the signal. On the other hand, it is needed to generate a clock synchronizing with playback signal by a PLL circuit for obtaining playback data. For generating and supplying this clock stably, it is also required to reduce continuity of "0" or "1" data in length. From a viewpoint of recording density, data pattern consisting of repetitive "0" and "1" is undesirable because repetition of "0" and "1" brings the severest recording/playback condition.
Channel coding of the DIGITAL S VTR is basically operated by SI-NRZI (scrambled interleaved non-return zero inverted) and 24-25 modulation.
As a result of the above-mentioned operation, data conversion is performed so that "0" and "1" are arranged suitably for adding sync signal and for recording/playback.

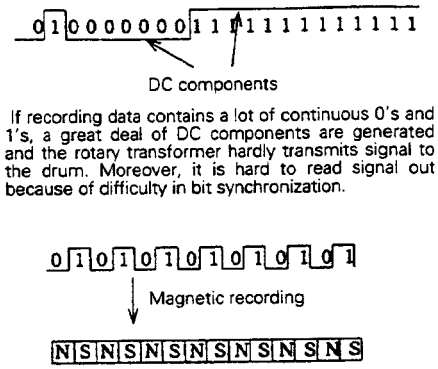

Fig. 1-1-5(g)

1.1.6 Audio system

1. Outline

1) Number of recording channels
- Digital audio : 4 channels (Available for independent insert editing)
- Search audio :2 channels (AC bias recording, to be used for search mode only)

2) Specifications of dital audio
- Compression : None
- Error correction : Read-Solomon product coding Inner (85, 77), Outer (14, 9)
- Sampling frequency : 48 kHz
- Number of quantizing bits : 16 bits

3) Audio AUX data
Besides audio data, following data can be recorded in the audio block.
- Number of REC channels : 2-channel mode or 4-channel mode
- Emphasis : ON/OFF
- Data on editing point : Editing point or not
- Amount of recording data : 1580 to 1620 samples for 1 frame

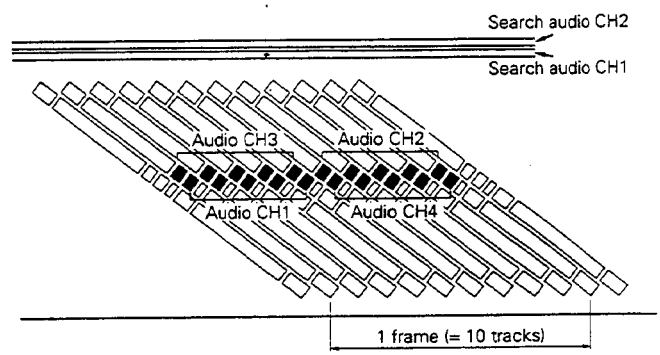

Fig. 1-1-6(a) Audio signal processing

2. Circuit construction

1) Signal flow
Signal processing by the audio system is shown in Fig. 1-1-6(b).

2) Function of each block
- A-D converter
This A-D converter converts analog audio signal into digital audio signal by asynchronous 48 kHz sampling clock to supply audio signal to the video system. Analog audio signal having the reference input level (+4 dBu) is converted into digital data equivalent to –20 dB in full-scale conversion.

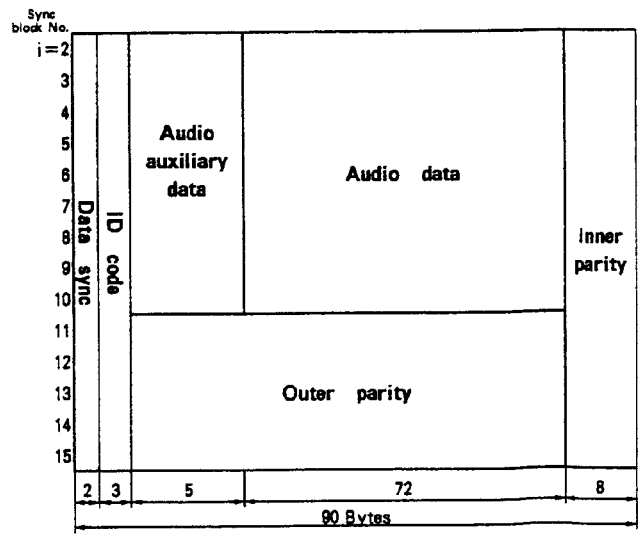

Fig. 1-1-6(b) Construction of audio block

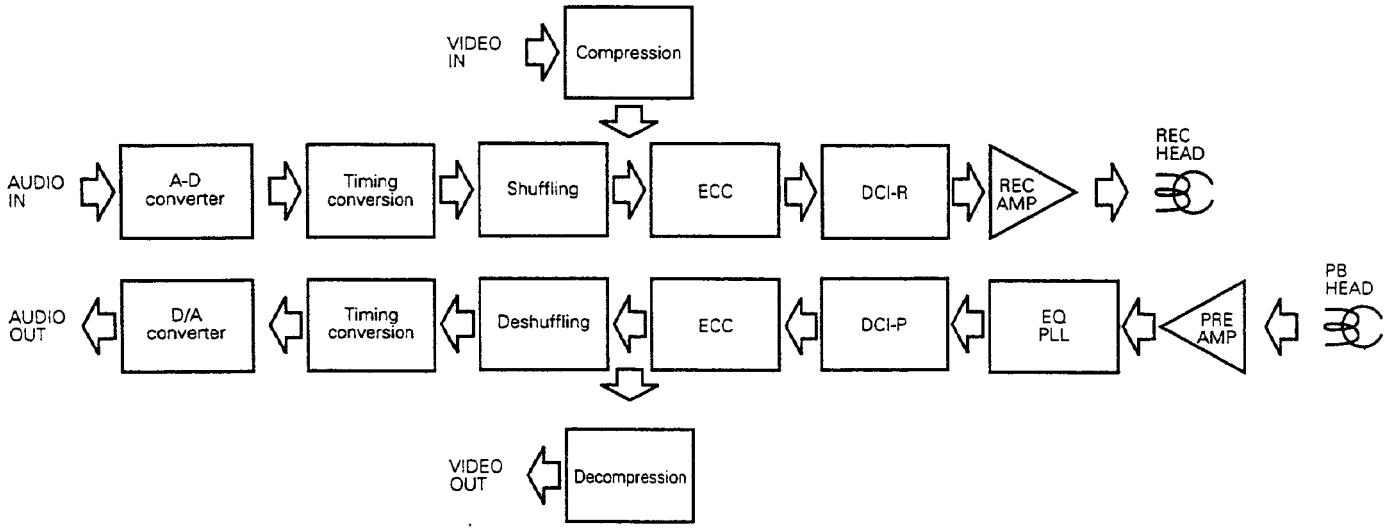

Fig. 1-1-6(c) Audio signal processing

- Data rate transformation
  [In recording:]
  Audio data that was asynchronously sampled is processed to synchronize with video signal. In concrete words, audio data is splitted into units equivalent to 1 video frame each, and then each unit data is synchronized with clock for the video system. At that time, amount of sampling data for 1 frame is not fixed and different from frame to frame. Therefore, amount of recorded data is put on record in the audio AUX area.

  [In playback:]
  Audio data that was transformed for recording is restored to the original rate. In short, VCO is controlled to equalize clocks for 1-frame period to data recorded in the audio AUX area in number, and resultingly yielded clocks are used for rate transformation in this stage.

- Shuffling/Deshuffling
  [Shuffling]
  Shuffling rearranges recording data according to a prescribed rule for making error correction possible if burst error occurs.
  [Desshuffling]
  Deshuffling restores transformed recording data format to the original mode for playback.
- ECC, DCI
  Refer to 1.1.5.
- D-A converter
  This D-A converter converts digital data into analog data.

1.2 REMOVING OF OUTER COVERS

1.2.1 Top cover

1. Loosen two screws ①.
2. Remove the top cover while raising it by the rear.

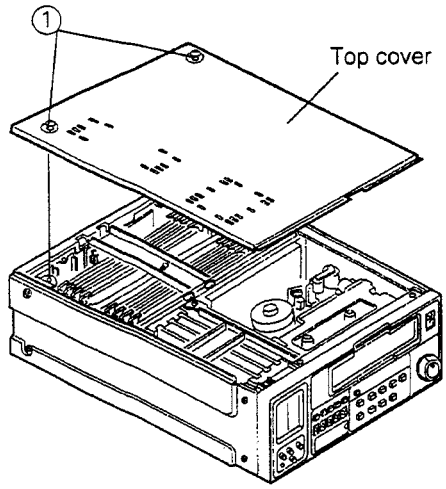

Fig. 1-2-1

1.2.2 Side cover

1. Remove the top cover. (Refer to 1.2.1.)
2. Remove four screws ② and remove a side cover.

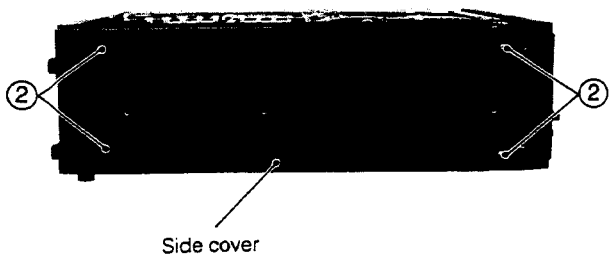

Fig. 1-2-2

1.2.3 Front panel assembly

1. Remove the top cover. (Refer to 1.2.1.)
2. Remove six screws ③.
3. Remove four control knobs (or two from the set exclusively used for playback) such as TRACKING VR, etc.
4. Draw the front panel assembly frontwards and disconnect the connector from the JOG/SHUTTLE assembly. Then draw the front panel furthermore for removing.

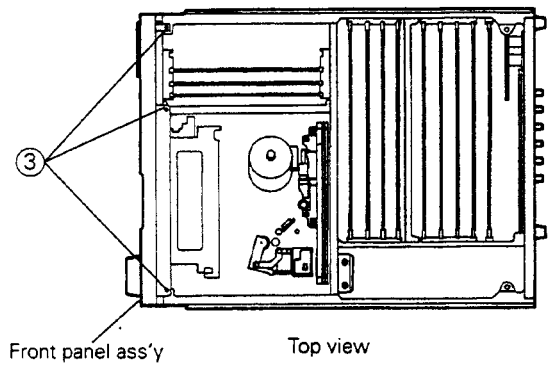

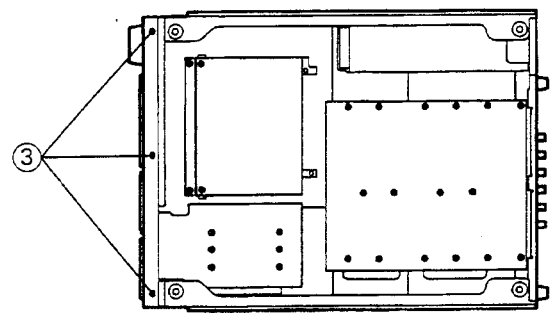

Fig. 1-2-3

1.2.4 Bottom cover

1. Remove five screws ④ and remove the bottom cover.

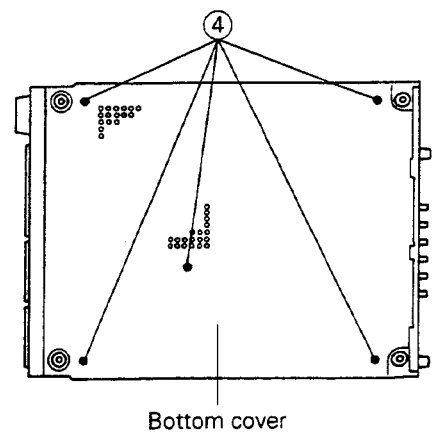

Fig. 1-2-4

1.3 REMOVING OF MAIN P.C. BOARDS

Note:

When removing or remounting P.C. board, make sure to turn the POWER switch off or disconnect the power supply beforehand. When remounting P.C. board, restore it to the original position without fail. For location of main P.C. boards, refer to "3.1.5 Location of main P.C. boards".

Table 1-3-1 Removing of main P.C. boards

<table>
<tr><th>Group</th><th>Board name</th><th>Extension board</th><th>Removing procedure</th></tr>
<tr><td rowspan="2">A</td><td>[1][3] PV PROCESS
[1][4] OUT MEM
[1][5] ANA IN
[1][7] OUT/GEN
[1][9] OUT ENC
[2][1] DIG AUD
[2][2] AUD I/O
[3][1] SYS/TC
[6][0] DIG I/O
(BR-D85U, SA-D80U/D50U optional)</td><td>KLJ0054</td><td rowspan="2">1) Remove the top cover. (Refer to 1.2.1.)
2) Remove the board holder .
3) Remove a target board while raising its ejectors up.
4) Use the extension board for checking.
 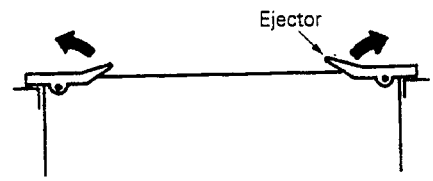

WARNING
When mounting each board, pay careful attention to its mounting place, particularly to the mounting place of the PV PROCESS board. If the PV PROCESS board is mounted in a wrong place or any board other than the PV PROCESS board is mounted in the place specified for the PV PROCESS board, the wrong mounted board may possibly be dameged.</td></tr>
<tr><td>[1][2] RF PRO1
[1][8] RF PRO2
[2][0] ANA AUDIO</td><td>KLJ0055</td></tr>
<tr><td>B</td><td>[3][2] OPERATION
[3][3] HP</td><td>KLJ0087</td><td>1) Remove the top cover. (Refer to 1.2.1.)
2) Remove the front panel assembly. (Refer to 1.2.3.)
3) Execute "1.3.1 Removing of board belonging to Group B".</td></tr>
<tr><td>C</td><td>[0][1] MOTHER-1
[0][2] MOTHER-2</td><td>—</td><td>1) Remove the top cover. (Refer to 1.2.1.)
2) Remove all boards of "Group A".
3) Place the set bottom side up and remove the bottom cover. (Refer to 1.2.4.)
4) Execute "1.3.2 Removing of board belonging to Group C".</td></tr>
<tr><td>D</td><td>[3][0] MCTL/SV
[3][6] REEL MDA</td><td>—</td><td>1) Place the set bottom side up and remove the bottom cover. (Refer to 1.2.4.)
2) Execute "1.3.3 Removing of board belonging to Group D".</td></tr>
<tr><td>E</td><td>[4][0] REAR-1
[4][1] REAR-2</td><td>—</td><td>1) Remove the top cover. (Refer to 1.2.1.)
2) Disconnect wires from the DIGITAL I/O terminal (if mounted).
3) Execute "1.3.4 Removing of board belonging to Group E".</td></tr>
<tr><td>F</td><td>[1][1] REC/ITI</td><td>PRK10157A5</td><td>1) Remove the top cover. (Refer to 1.2.1.)
2) Execute "1.3.5 Removing of board belonging to Group F".</td></tr>
<tr><td>G</td><td>SWITCHING REGULATOR</td><td>—</td><td>1) Remove the top cover. (Refer to 1.2.1.)
2) Remove the bottom cover. (Refer to 1.2.4.)
3) Disconnect connectors from the switching regulator.
4) Execute "1.3.6 Removing of board belonging to Group G".</td></tr>
</table>

1.3.1 Removing of board belonging to Group B

1. Remove nine screws ⑤ and then remove the OPERATION board.

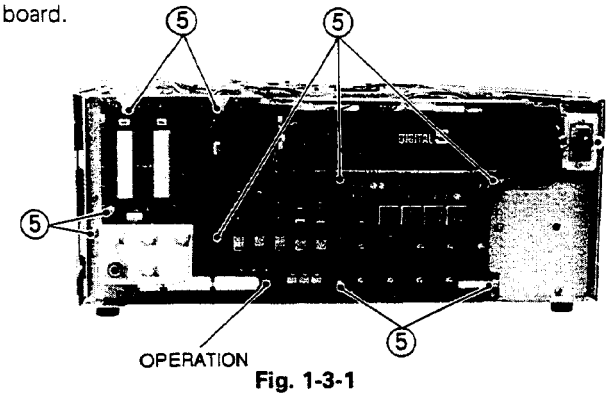

Fig. 1-3-1

1.3.2 Removing of board belonging to Group C

• MOTHER-1 board

1. Remove sixteen screws ⑥.
2. Disconnect all connectors from the MOTHER-1 board and then remove the board.

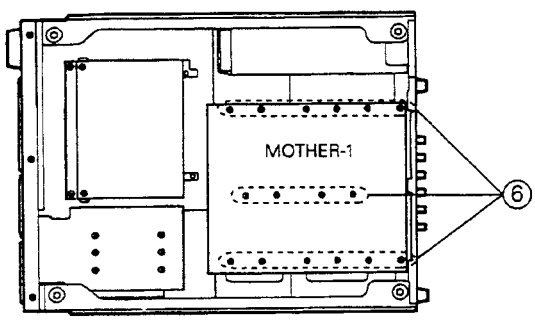

Fig. 1-3-2

• MOTHER-2 board

1. Remove the front panel assembly. (Refer to 1.2.3.)
2. Remove six screws ⑥.
3. Disconnect all connectors from the MOTHER-2 board and then remove the board.

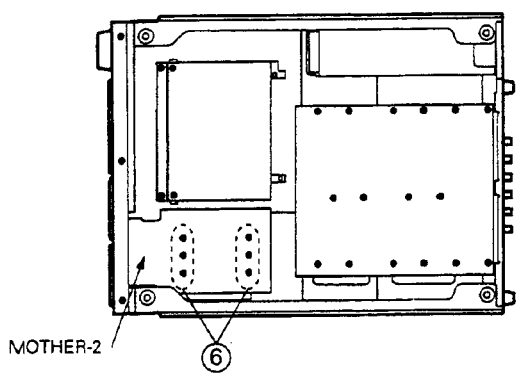

Fig. 1-3-3

1.3.3 Removing of board belonging to Group D

• MCTL/SV board

1. Remove two screws ⑥ and open the MCTL/SV board frontwards. The board can be checked in this condition.
2. For removing the MCTL/SV board, disconnect all connectors from the board prior to removing.

Note: There is a fear that IC8 (EEPROM) on the MCTL/SV board may possibly damaged by static electricity. When removing the board, do it with the most meticulous care.

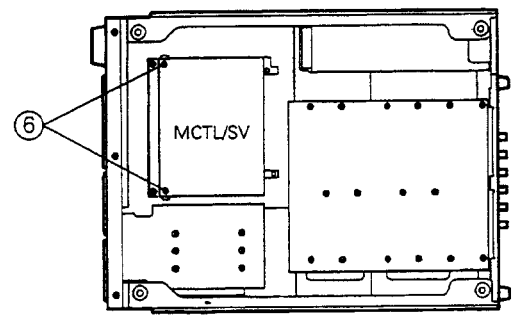

Fig. 1-3-4

• REEL MDA board

1. Open the MCTL/SV board frontwards. (Refer to preceding description in this subsection.)
2. Remove four screws ⑥ and then detach the REEL MDA board from the bracket. The board can be checked in this condition.
3. For removing the REEL MDA board, disconnect all connectors from the board prior to removing.

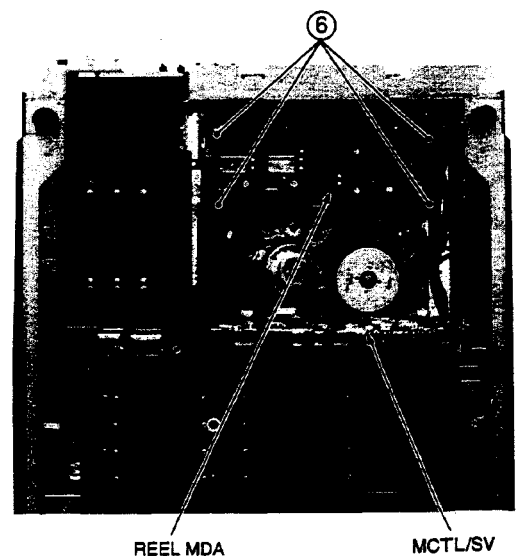

Fig. 1-3-5

1.3.4 Removing of board belonging to Group E

• REAR-1 board

1. Remove six screws ⑦ (indicated by ⇨ arrow) first and then remove the rear bracket.
2. Remove twelve screws ⑧.
3. Disconnect all connectors from the REAR-1 board.
4. Remove three screws ⑥ and then remove the REAR-1 board.

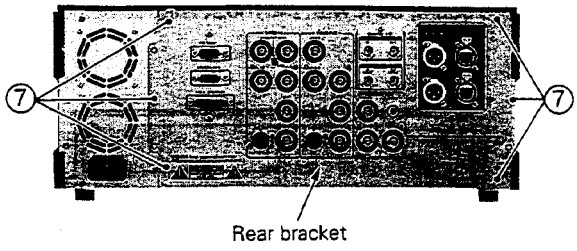

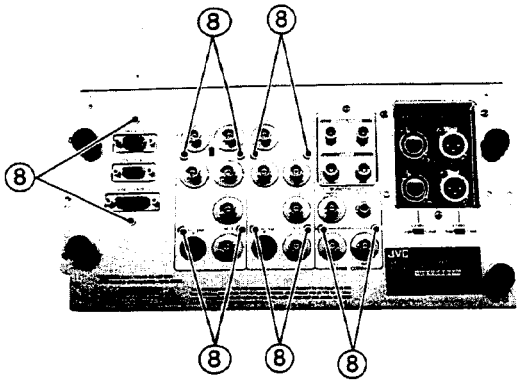

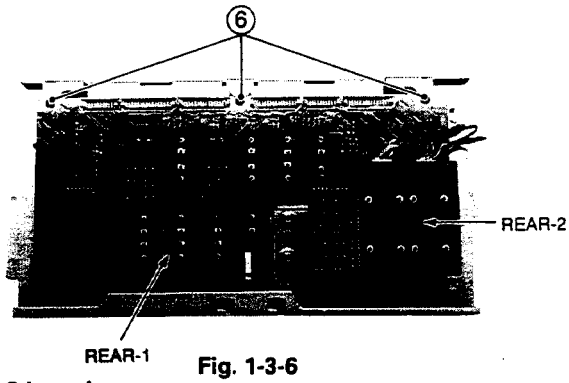

Fig. 1-3-6

• REAR-2 board

1. Disconnect all connectors from the REAR-2 board.
2. Remove three screws ⑧ and then remove the REAR-2 board.

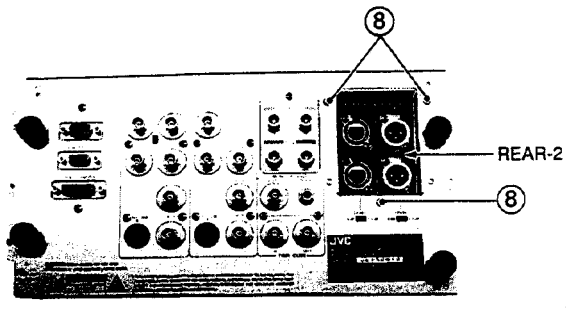

Fig. 1-3-7

•DIGITAL I/O connector

The wires of the DIG I/O board are connected to the DIG I/O terminal as shown figure below.

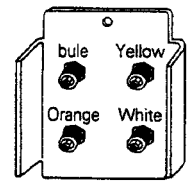

Fig. 1-3-8

1.3.5 Removing of board belonging to Group F

1. Remove two screws ⑨.
2. Disconnect all connectors from the REC/ITI board.
3. Remove the REC/ITI board while raising it up.

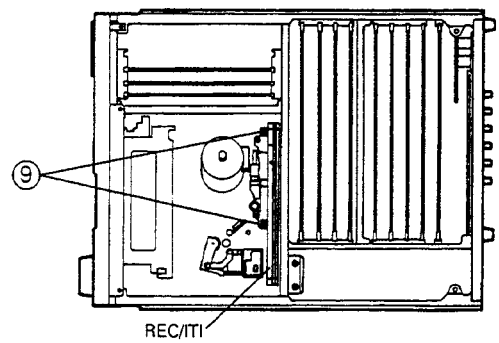

Fig. 1-3-9

1.3.6 Removing of board belonging to Group G

1. Remove four screws ⑦.
2. Remove two screws ⑩.
3. Draw the switching regulator assembly rearwards to remove it.

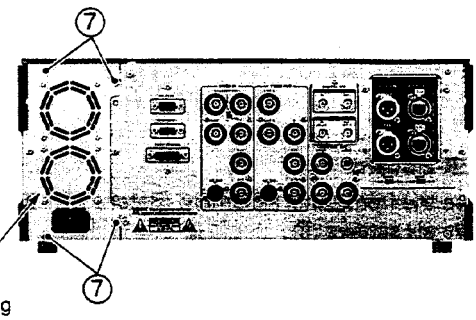

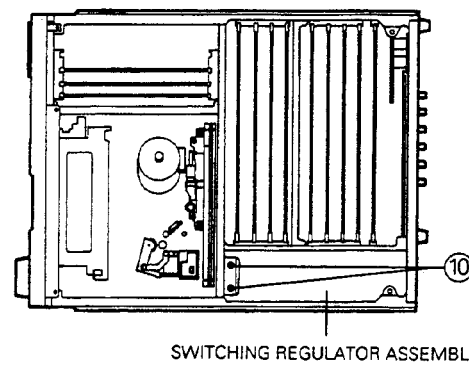

Fig. 1-3-10

1.4 EXPLANATION OF INTERNAL SWITCHES ON BOARDS

1.4.1 Function of each switch

[1][4] OUT MEM

Symbol No.	Switch name	Setting on shipment	Function
S1	Adjusting switch	Always OFF all 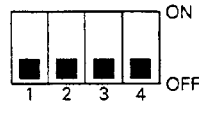	Adjustment switches. Don't change the original setting. 1 : Not connected 2 : Adjustment switch for the board alone. 3 : Adjustment switch for Y/C timing. To change output order of digital Y and C outputs. 4 : Functionless

[1][7] OUT/GEN

Symbol No.	Switch name	Setting on shipment	Function
S301	Sync phase adjusting switch	Depends on factory adjustment.	Adjustment switch for sync phase of output signal. Don't change the original setting except the case it is used for "3.6.8 Sync phase adjustment".

[1][9] OUT/ENC

Symbol No.	Switch name	Setting on shipment	Function
S1	Y/C delay adjusting switch	Always NOR all 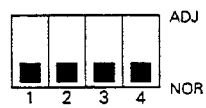	Don't change the original setting except the case it is used for "3.7.9 Y/C delay adjustment".

[6][0] DIG I/O (BR-D85U, SA-D80U / D50U OPTIONAL)

Symbol No.	Switch name	Setting on shipment	Function
S201	Digital audio output level selector switch	3V S201 1V 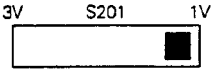	To be used to switch digital audio output level. 1V : For unbalanced output with BNC connector used. 3V : For balanced output with "unbalanced (BNC)-to-balanced (XLR)" output converter connector used.

1.5 MANUAL EJECTION OF CASSETTE TAPE IN AN EMERGENCY

When the cassette tape is not ejected from the set because of the slack of tape or failure in the mechanism, eject it manually referring to the following cases.
In such an event, remove the top cover first (refer to 1.2.1) to know the current status of the cassette tape, and then proceed to the removing work according to Table 1-5-1.

Table 1-5-1 Tape and mechanism conditions

	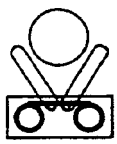		
Tape status	Tightly taken up	Loosely wound	Not taken up
Mechanism status	Unloading end	Unloading end	Loading end or halfway
Reference section	1.5.1	1.5.2	1.5.3 or 1.5.4

1.5.1 When tape is in unloading condition:

1. Make sure that the tape is completely in unloading condition.
2. Turn off the power.
3. Turn the main gear of the cassette housing assembly in the direction shown by Fig. 1-5-1.

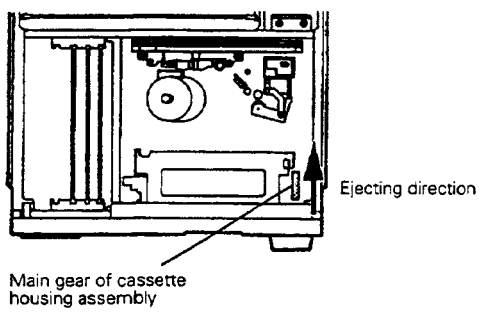

Fig. 1-5-1 Turning direction of main gear of cassette housing assembly

4. The cassette housing starts ejecting operation.
5. Continue to turn the main gear until the cassette tape is completely ejected.

1.5.2 When the set is in "AUTO OFF" mode though tape is slack

1. Press the COUNTER RESET, FF and REW buttons together in the "AUTO OFF" mode.
2. The set enters test mode No. 63: LOW TORQUE (M) ("63" appears on the counter display). While confirming this messages, press the COUNTER RESET button again.
3. Turn the JOG dial clockwise, and the reel motor rotates to take in the slack of the tape.

Note:

Don't turn the JOG dial counterclockwise. If it is done so, it slackens the tape moreover.

4. After this, perform the same steps as the preceding section 1.5.1 to eject the cassette tape.

1.5.3 When tape is still in loading condition (1):

If there is nothing faulty in the reel servo system, the tape can be taken up in a test mode.
1. Make sure that the set is in the "AUTO OFF" mode.

Note:

When the set is not in the "AUTO OFF" mode, it cannot be entered into the test mode. If so, proceed to the following section 1.5.4.

2. Press the COUNTER RESET, FF and REW buttons together in the "AUTO OFF" mode.
3. The set enters test mode No. 63: LOW TORQUE (M) ("63" appears on the counter display). While confirming this messages, press the COUNTER RESET button again.
4. While turning the mode motor in the direction shown by Fig. 1-5-2, turn the JOG dial clockwise.

Note:

Don't turn the JOG dial counterclockwise. If it is done so, it slackens the tape moreover.

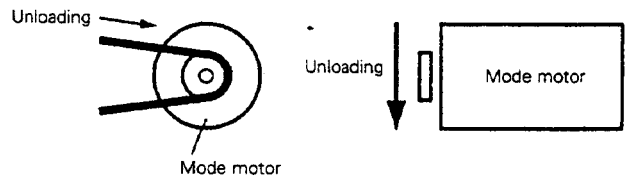

Fig. 1-5-2 Turning direction of mode motor

5. The reel motor starts unloading operation while rotating in the take-up direction at a low torque to take in the slack of the tape. Continue the above step 4 until the tape is set in the unloading position.
6. After this, perform the same steps as the previous section 1.5.1 to eject the cassette tape.

1.5.4 When tape is still in loading condition (2):

If the tape cannot be ejected by the above steps of 1.5.4 because of failure of the reel motor, etc., try to do the following steps.
1. Place the set on its left side.
2. Remove the bottom cover. (Refer to 1.2.4.)
3. Turn the mode motor in the direction shown by Fig. 1-5-2.
4. The mechanism starts unloading.
5. While inserting a finger into the mechanism from the bottom side, turn the supply reel motor clockwise by the finger to wind up the tape.

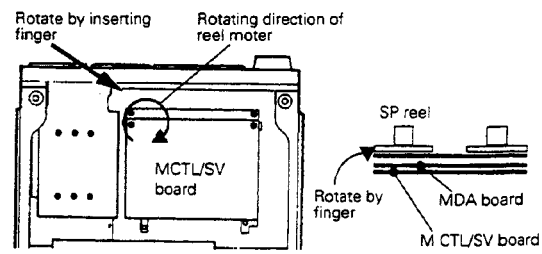

Fig. 1-5-3 Turning direction of supply reel motor

6. Repeat the above steps 3 to 5 until the tape is set in the unloading position.
7. After this, perform the same steps as the previous section 1.5.1 to eject the cassette tape.

1.6 HOUR METER AND VERSION INDICATION

1.6.1 Outline

This VTR can show such various data as mentioned below on the on-screen display and counter display.

1. Version of CPU program (XXX ROM Ver.)
2. Total power on hour (POWER HOUR METER)
3. Total running hour of drum motor (DRUM HOUR METER)
4. Total running hour of capstan motor (CAP HOUR METER)
5. Total running hour of reel motor (REEL HOUR METER)
6. Total power on/off times
7. Total loading/unloading times
8. Total intake/eject times
9. Total head cleaner operation times

1.6.2 Operation

1. Call up the SERVICE MENU SWITCH on the display. (Refer to 1.7.3, items 1 to 3.)
2. The SERVICE MENU SWITCH appears both on the counter display and on-screen display. The indication next to the SERVICE MENU SWITCH No. 601 expresses version of the syscon.

Note:

Only the DRUM HOUR METER can be checked by the USER MENU SWITCH.

3. As the JOG dial is turned, item shown on the display changes as shown in Fig. 1-6-2. Detail of indications is shown in Fig. 1-6-1.
4. For quitting the HOUR METER and VERSION INDICATION, turn off the power.

• Example of program version indication

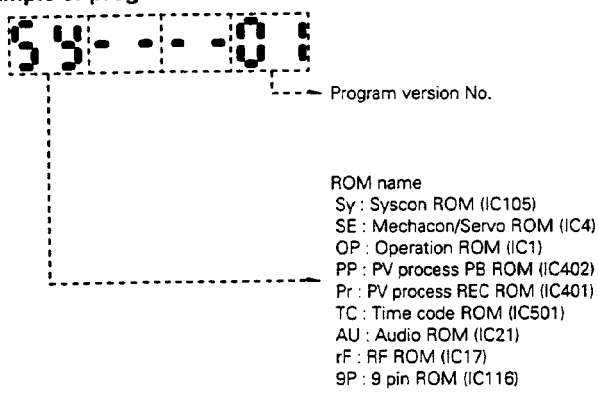

• Example of hour meter indication

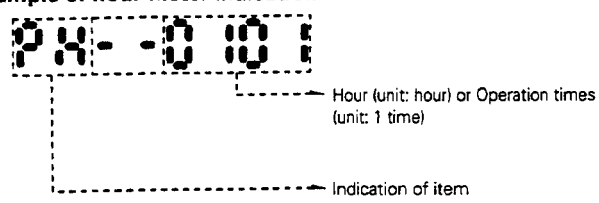

Fig. 1-6-1 Indication of hour meter and ROM version (1)

• Examples of counter display indication

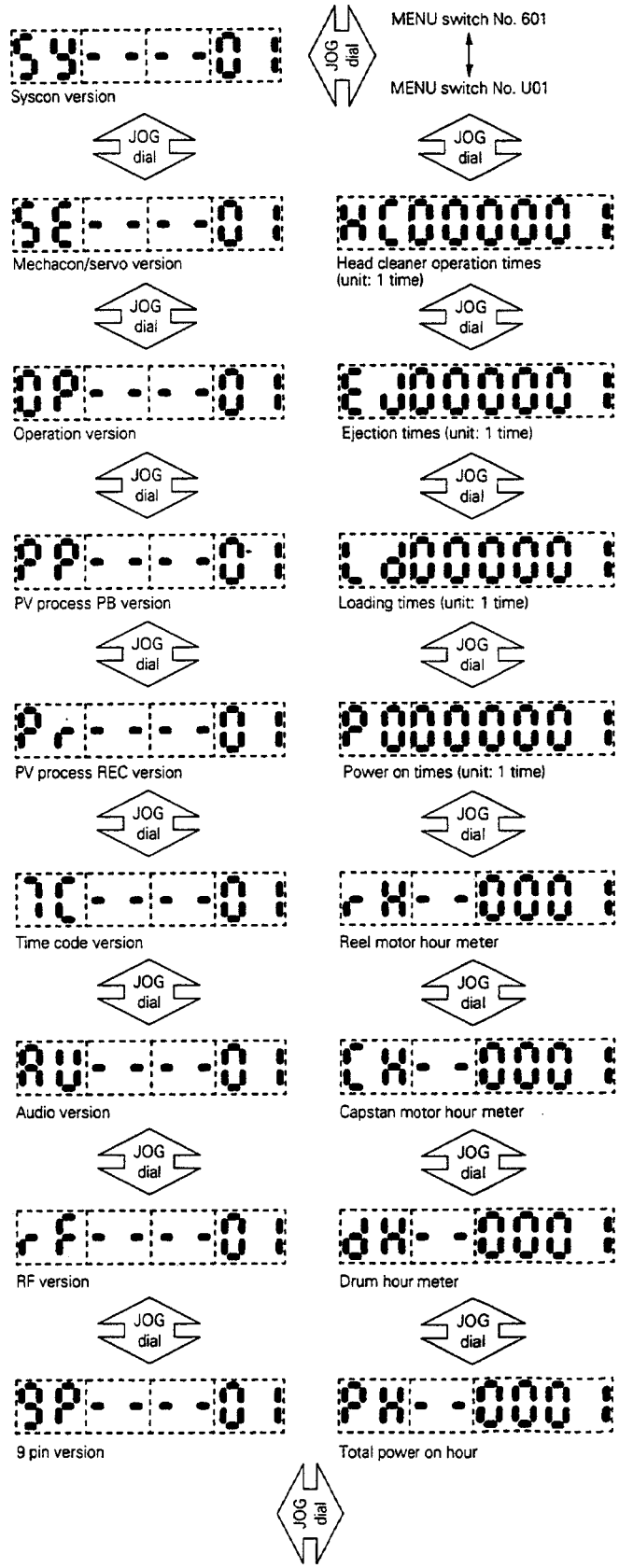

Fig. 1-6-2 Indication of hour meter and ROM version (2)

1.7 SERVICE MODE

Note:

Mind that "SERVICE MODE" mentioned in this section differs from "SERVICE MENU SWITCH". In short, the SERVICE MODE is the general term for all menus shown in Fig. 1-7-1 while the SERVICE MENU SWITCH means the menu switches thouse are not opened for users explained in the section 1.7.3.

1.7.1 Outline

The SERVICE MODE of this VTR functions as follows.

1. Calling and setting of SERVICE MENU switches.
2. Saving and calling of setting of MENU switches.
3. Resetting of MENU switches. (To restore switch setting to initial status on shipment from factory)
4. Showing and resetting of hour meters.
5. Showing and resetting of operation times.
6. Showing and resetting of warning records.
7. Saving and calling of data written on the EEPROM of the MECHACON/SERVO board.

1.7.2 Calling of SERVICE MODE

1. Take the cassette tape out of the set and turn off the POWER switch.
2. Turn on the POWER switch again and press the EJECT and STOP buttons together within 2 seconds after the counter display lights up.
3. Both the on-screen display and counter display show the SERVICE MODE.
4. Select a desired item (submenu) by turning the JOG dial.
5. Set the selected item referring to its usage.
6. When setting is complete, turn off the POWER switch without fail.

Notes:

- The SERVICE MODE called up on the display can be cancelled by turning off the POWER switch only. As long as the SERVICE MENU switch is appearing on the display, all items of MENU switches are ready for showing and resetting.
- When the MENU switch No. 357 "DIAG AT POWER ON" is being set to "ON (1)", it is inhibited to access the SERVICE MODE.
- When the MENU switch No. 002 "OPERATION LOCK" is being set to "ON (1)", the SERVICE MODE cannot be activated.

• SERVICE MODE to be shown on on-screen display

0: SERVICE MENU SW

0: SERVICE MENU SW (Refer to 1.7.4, 1.7.5 and 1.7.6.)
Menu for saving and calling MENU switch setting as well as for resetting it to the initial status on shipment from factory.

1 : HOUR METER CLEAR

1: HOUR METER CLEAR (Refer to 1.7.7.)
Menu for resetting each hour meter to zero.

2 : RUNNING TIMES CLEAR

2: RUNNING TIMES CLEAR (Refer to 1.7.8.)
Menu for resetting number of operation times of each item.

3 : M/S EEPROM

3: M/S EEPROM (Refer to 1.7.9.)
Menu for saving and calling data written on the MECHACON EEPROM.

4 : ERROR CLEAR

4: ERROR CLEAR (Refer to 1.7.10.)
Menu for clearing warning records.

5 : ER. CALL 0 TIMES AGO

5: ERROR CALL 0 TIMES AGO (Refer to 1.7.11.)
Menu for examining the last warning record.

6 : ER. CALL 1 TIMES AGO

6: ERROR CALL 1 TIMES AGO (Refer to 1.7.11.)
Menu for examining the warning record prior to the last.

7 : ER. CALL 2 TIMES AGO

7: ERROR CALL 2 TIMES AGO (Refer to 1.7.11.)
Menu for examining the third latest warning record.

8 : ER. CALL 3 TIMES AGO

8: ERROR CALL 3 TIMES AGO (Refer to 1.7.11.)
Menu for examining the fourth latest warning record.

0 : SERVICE MENU SW

0: SERVICE MENU SW
The SERVICE MENU SW repeatedly appears as the JOG dial is continuously turned.

Fig. 1-7-1 Detail of SERVICE MODE

1.7.3 Setting of SERVICE MENU SWITCHES

This VTR has special menu switches to be exclusively used for servicing (SERVICE MENU SWITCHES) that are not mentioned in the instructions for user. This section explains methods to change settings of those service menu switches.

1. Call up the SERVICE MODE. (Refer to 1.7.2.)
2. Press the MENU button. The SERVICE MODE is replaced by tape counter indication on the display.
3. Press the MENU button once again and all menu switches including the service menu switches will be shown on the display.
4. Select a desired item by turning the JOG dial.
5. Change the setting of the item with the SELECT button.
6. Press the SET button to save the changed data on setting. The display is restored to the usual indication at the same time. (Pressing the MENU button restores the display to the usual indication but it doesn't save the changed data.)
7. Lastly, turn off the POWER switch.

Note: Table 1-7-1 shows the SERVICE MENU SWITCHES only, which are excerpted from the whole MENU switches. Actually, all the MENU SWITCHES are shown on the display.

Table 1-7-1 Detail of SERVICE MENU SWITCHES (1)

Note:
Number in square brackets expresses initial setting on shipment from factory.

No.	Item	Function	Counter display	Description
303	WARNING	Warning mode on/off	[0]	ENABLE: Warning signal is accepted.
			1	DISABLE: Warning signal is not accepted. (To be used for investigating the cause of warning)
304	REC	REC mode on/off (D80 and D85 only)	[0]	ENABLE: Recording is permitted. (With the erase protection slide lock set to "REC") Recording is inhibited.
			1	DISABLE: Recording is inhibited.
305	REPEAT REC	Repeat recording on/off (D80 and D85 only)	[0]	OFF: Repeat recording is not performed.
			1	ON: Repeat recording is performed.
306	LONG PAUSE / STILL / STP	Tape protection function on/off	0	OFF: Tape protection function (Long Pause mode) is not activated.
			[1]	ON: Tape protection function (Long Pause mode) is activated according to setting of the MENU switch No. 307 to No. 309.
307	PAUSE / STILL / STP TIME	Setting an interval to shift the mode to the Long Pause when the MENU switch No. 306 is set to "1".	0	The set enters Long Pause mode 1 second later.
			1	The set enters Long Pause mode 10 seconds later.
			2	The set enters Long Pause mode 30 seconds later.
			3	The set enters Long Pause mode 1 minute later.
			4	The set enters Long Pause mode 2 minutes later.
			5	The set enters Long Pause mode 3 minutes later.
			6	The set enters Long Pause mode 4 minutes later.
			[7]	The set enters Long Pause mode 5 minutes later.
308	LONG PAUS / STILL MODE	Setting an interval to shift the mode to the Long Pause when the MENU switch No. 306 is set to "1".	0	The set enters Standby-Off mode. (according to the MENU switch No. 310)
			[2]	The set performs STEP FWD operation at intervals of the time set by the MENU switch No. 307. (The set enters Standby-Off mode after this operation is repeated three times.)
309	LONG STOP MODE	Selecting a mode next to the Standby-on mode when the set is left in the Standby-on mode with the MENU switch No. 306 being set to "1".	[0]	The set enters Standby-Off mode. (according to the MENU switch No. 310)
			2	The set performs STEP FWD operation at intervals of the time set by the MENU switch No. 307. (The set enters Standby-Off mode after this operation is repeated three times.)
310	STANDBY – OFF MODE	Selecting mechanism position and drum status when the mode is set to the Standby-off mode.	0	DRUM: ON (running), MECHA: FULL LOAD
			[1]	DRUM: OFF (stopping), MECHA: FULL LOAD
			2	DRUM: OFF (stopping), MECHA: UNLOAD
315	LOCAL FUNCTION	Selecting an operation button to be accepted by the VTR when the REMOTE switch is set to "9-PIN".	[0]	Operation of STOP/EJECT button is enabled.
			1	Operation of STOP/EJECT/FF/REW/PLAY/STILL button is enabled.
			2	Operation of every button is enabled.
			3	Operation of every button is disabled.
316	LOCAL CMD FUNCTION	Selecting a 9-pin command to be accepted by the VTR when the REMOTE switch is set to "LOCAL".	[0]	All commands are not accepted.
			1	Only STOP and EJECT commands are accepted.
320	PREROLL TIME	Selecting a preroll time to respond to a 9-pin command "20.30: PREROLL" if it is received.	0	0 second
			⋮	⋮
			[5]	5 seconds
			⋮	⋮
			15	15 seconds

Table 1-7-1 Detail of SERVICE MENU SWITCHES (2)

Note:
Number in square brackets expresses initial setting on shipment from factory.

No.	Item	Function	Counter display	Description
323	PREROLL END MODE	Selecting a mode following preroll operation to correspond to "20.30: PREROLL" of a 9-pin command if it is received.	[0]	STANDBY-ON mode follows preroll operation.
			1	STILL mode follows preroll operation.
325	CTL COUNTER MODE	Selecting step-up mode of the CTL counter.	[0]	CTL counter steps forward in 10-hours mode.
			1	CTL counter steps forward in 24-hours mode.
327	CTL CLEAR AT EJECT	To clear or not to clear the CTL counter with EJECT operation.	0	DISABLE : Not to clear.
			[1]	ENABLE : To clear.
343	SUB WARNING	Selecting warning mode.	[0]	According to setting of MENU switch No. 303.
			1	When MENU switch No. 303 is set to "ENABLE", some warnings (32, 56, 57, 58) won't occur.
350	SPECIAL MODE	Switching between standard specifications and special (optional) specifications.	[0]	Standard specifications
			1	Special specifications (when special specifications are optionally installed)
358	DIAG WARNING	To show or not to show a result of self-diagnosis at power on. (This function is effectuated when the MENU switch No. 357 is set to "ON".) **Note:** When the VTR is turned on as this MENU switch is set to "ENABLE(0)", a warning indication "8203", "8204" or "9182" appears on the display. This does not express a trouble of the VTR but just comes from the peculiarity of the VTR.	0	ENABLE : Warning indication.
			[1]	DISABLE : No warning indication.
406	USERS BIT GROUP	Selecting usage of user bit.	[0]	Not specified
			1	ISO characters (conforming to ISO 646, 2022)
			2	Undefined
			3	Undefined
407	PHASE CORRECTION BIT	To activate or not to activate LTC's phase correction bit.	0	OFF: Edge direction of the first bit of data block is not fixed.
			[1]	ON: Edge direction of the first bit of data block is fixed.
410	AUTO REGEN MODE	Selecting an editing mode to effectuate REGENE mode when the TCG SELECT switch on the front panel is set to "PRESET". (D80 and D85 only)	[0]	The set enters REGENE mode when ASSEMBLE or INSERT mode is selected as an editing mode.
			1	The set enters REGENE mode when ASSEMBLE mode is selected as an editing mode.
			2	The set enters REGENE mode when INSERT mode is selected as an editing mode.
			3	The set always enters PRESET mode.
509	WARNING MESSAGE	Turning on/off warning indication when the set enters AUTO OFF mode.	0	OFF: Not to indicate.
			[1]	ON: To indicate. (Warning message is output to all output terminals.)

• Technical terminology

REPEAT REC (repeated recording): When tape reaches its end in REC mode, the operation mode is automatically shifted to REW mode. As the tape is wound up to its beginning, the mode is moreover shifted to REC mode again.

LONG PAUSE mode: Tape protection function that is automatically activated when the set is left in PAUSE, STILL, STOP or STANDBY-ON mode for a certain period of time.

1.7.4 Method to register setting of MENU SWITCH

1. Call up the SERVICE MODE and open "0: SERVICE MENU SW" on the display. (Refer to 1.7.2.)
2. Select "EnTEr" by pressing the SELECT button.
3. Press the SET button, and the current setting of the MENU SWITCH (including SERVICE MENU SWITCH) is registered.

1.7.5 Method to call up setting of MENU SWITCH

1. Call up the SERVICE MODE and open "0: SERVICE MENU SW" on the display.
2. Select "CALL" by pressing the SELECT button.
3. Press the SET button to call up currently registered setting of MENU SWITCH.

1.7.6 Method to reset MENU SWITCH to initial setting on shipment

1. Call up the SERVICE MODE and open "0: SERVICE MENU SW" on the display. (Refer to 1.7.2.)
2. Select "rESET" by pressing the SELECT button.
3. Press the SET button, and the MENU SWITCH is restored to the initial status as it was set on shipment.

1.7.7 Method to reset HOUR METER

1. Call up the SERVICE MODE and open "1: HOUR METER CLR" on the display. (Refer to 1.7.2.)
2. Select an hour meter desired to reset by pressing the SELECT button.
3. Press the SET button, and the selected hour meter is reset.
4. For resetting other hour meters, repeat the above steps 2 and 3 for each hour meter desired to reset.

Note:

Total power activation hours of any hour meter cannot be reset.

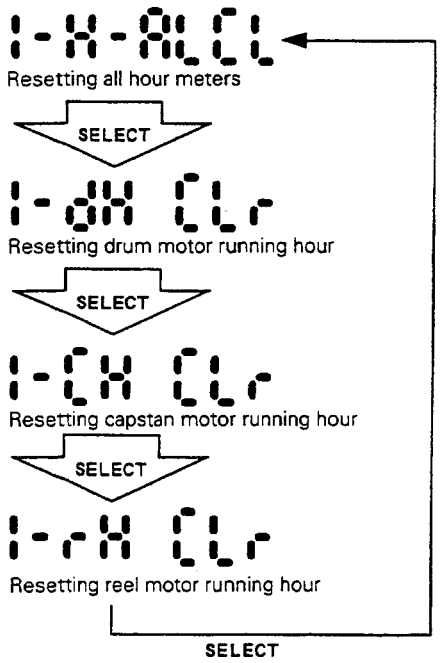

Fig. 1-7-2 Resetting of hour meters

1.7.8 Method to reset operation times

1. Call up the SERVICE MODE and open "2: RUNNING TIMES CLR" on the display. (Refer to 1.7.2.)
2. Select an item desired to reset its operation times by pressing the SELECT button.
3. Press the SET button, and the operation times of the item is reset.
4. For resetting other items for operation times, repeat the above steps 2 and 3 for each item.

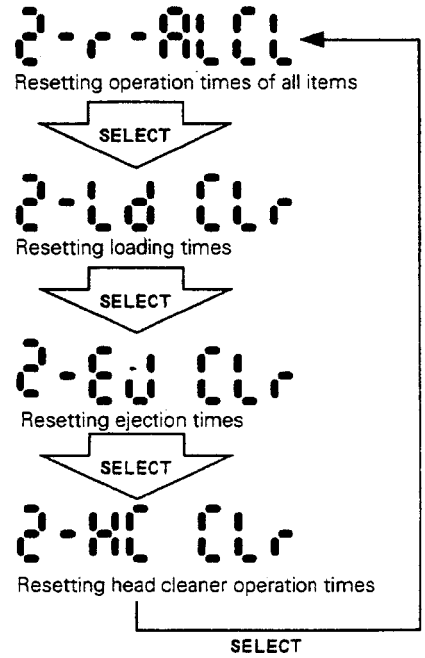

Fig. 1-7-3 Resetting of operation times

1.7.9 Method to save and call up M/S EEPROM data

This VTR has a function to save the MECHACON EEPROM data in the SYSCON EEPROM as well as to call up stored data. This function is helpful for replacing the MECHACON EEPROM, because it can be replaced without loss of data on hour meters, etc. For bringing this function in practice, use the SERVICE MODE as mentioned below.

1. Call up the SERVICE MODE and open "3: M/S EEPROM" on the display. (Refer to 1.7.2.)
2. Select "STOrE" or "LOAd" by pressing the SELECT button.
3. Press the SET button to save or call up data stored in the MECHACON EEPROM.

1.7.10 Method to clear warning records

This VTR stores data on the last four warnings. The SERVICE MODE serves to clear those warning records.

1. Call up the SERVICE MODE and open "4: ERROR CLR" on the display. (Refer to 1.7.2.)
2. Press the SET button, and all warning records stored in the memory are cleared.

1.7.11 Method to call up warning records

This VTR stores the last four warning records in the following data format so as to provide the service personnel with details of those warning status that the set fell into in the past.

a) Warning code in four figures
b) Operation mode in which the set fell into the warning status
c) Operation mode preceding to the mode in which the set fell into the warning status
d) Operation button pressed just before the set entered the warning status
e) Hour meter indication (total power activation hours) at the time when the set entered the warning status

The following method makes it possible to access to those respective data.

1. Call up the SERVICE MODE and open "5: ER. CALL 0 TIMES AGO" on the display. (Refer to 1.7.2.)
2. Press the SET button, and data on the last warning status can be seen on the counter display.
3. Press the SELECT button to select a desired data. Every time the SELECT button is pressed, the above mentioned data on the last warning status appears on the display one after another.
4. For examining more dated warnings, turn the JOG dial for the second last, third last and fourth last warnings to show the respective data on the counter display. (Refer to 1.7.1.)

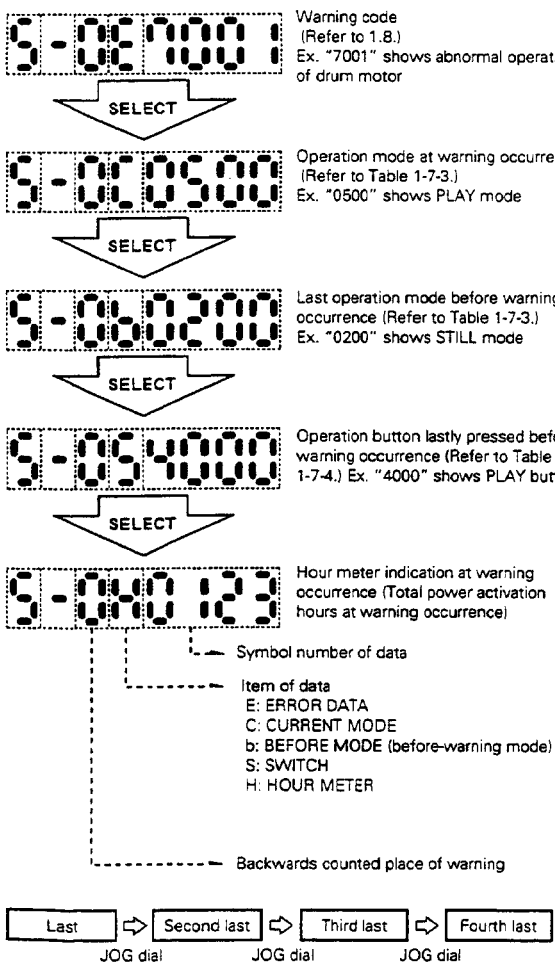

Fig. 1-7-4 Access to warning records

Way of looking into data

(a) Warning code
Refer to the warning detection circuit (see 1.8).

(b) Operation mode at warning occurrence and before-warning operation mode
One of mode commands used in the set and two bytes data of the mode command are shown on the counter display at a time. When there are more than two bytes data of a mode command, the mode command and data 0 are shown on the counter display first and the remaining data are shown in order from MSD to LSD.

Table 1-7-2 Mode data table

CMD	data	mode	Remarks
02	—	STILL	
05	—	PLAY	
07	—	NO CASSETTE	
09	—	EJECT	
0B	—	STANDBY-OFF	UNLOADING END status
0C	—	STANDBY-OFF	PINCH : OFF, DRUM : OFF
0D	—	STANDBY-ON	PINCH : ON, DRUM : ON
0E	—	ERROR MODE	
13	—	SKIP FWD	Leader tape skips in FULL LOADING status.
14	—	SKIP REV	
17	—	SLOW FF	FF/REW mode with the counter memory being turned on.
18	—	SLOW REW	
19	—	FAST FF	REEL SEARCH at x100 tape speed.
1A	—	FAST REW	
1B	—	SHORT FF	Leader tape skips in UNLOADING END status.
1C	—	SHORT REW	
80	*1	REC	With 1 byte data
81	*2	ASSM EDIT	With 1 byte data
83	*3	SHUTTLE (+)	With speed data
84	*3	JOG (+)	With speed data
85	*3	VARIABLE (+)	With speed data
86	*4	PLAY (+)	With speed data
91	*5	INSERT EDIT	With 1 byte data
93	*3	SHUTTLE (–)	With speed data
94	*3	JOG (–)	With speed data
95	*3	VARIABLE (–)	With speed data
96	*4	PLAY (–)	With speed data
B3	*6	INTAKE	With data indicating the next operation mode
B4	*6	HALF LOAD	
B5	*6	HALF UNLOAD	
B6	*6	LOAD	
B7	*6	UNLOAD	

For details of data (*1 to *6), refer to the following.

• Data added to mode command

*1: Detail of REC mode is expressed by Data 0.
<Data 0>
Example: Data 8010 = REC

MSD				LSD			
7	6	5	4	3	2	1	0
			REC		REC PLAY	REC PAUSE	BACK SPACE

*2: Detail of ASSEMBLY mode is expressed by Data 0.
<Data 0>
Example: Data 8112 = ASSEMBLY, EDIT STILL

MSD				LSD			
7	6	5	4	3	2	1	0
			ASSE-MBLY		EDIT PLAY	EDIT STILL	PRE-ROLL

*3: Tape speed is expressed by Data 0 in the following equation.

$$\text{TAPE SPEED} = 10^{\frac{\text{DATA0 [DEC]}}{64} - 2}$$

Example: Data 80 [HEX] = 128 [DEC]

$$\text{TAPE SPEED} = 10^{\frac{128}{64} - 2}$$

*4: Tape speed is expressed by Data 0 in the following equation.

$$\text{TAPE SPEED} = \text{x 1 (speed) x (1 + 0.001 x DATA0 [DEC])}$$

*5: Detail of INSERT mode is expressed by Data 0.
<Data 0>

MSD				LSD			
7	6	5	4	3	2	1	0
			INSERT				

*6: Data on the next mode to follow the current mode are added to those commands, and such data are expressed by Data 0 and Data 1. However, the counter display shows Data 0 only.
<Data 0>

MSD				LSD			
7	6	5	4	3	2	1	0
	REW	FF	STOP	REC PLAY	REC STILL		EJECT

<Data 1> These data are not shown on the counter display.

MSD				LSD			
7	6	5	4	3	2	1	0
REV	FWD	STILL	PLAY		SHTL REV	SHTL STILL	SHTL FWD

(c) Operation button pressed last in before-warning mode

The operation button that was pressed last in a before-warning mode is expressed by one of key commands used in the set.

Note: Commands concerned with operation buttons don't conform to the JVC BUS standard (VTR's inside bus standard).

Table 1-7-3 Key command table

CMD	data	mode	Remarks
30	00	EJECT KEY	
31	00	STOP KEY	
32	00	FF KEY	
33	00	REW KEY	
34	00	STILL KEY	
37	00	EDIT KEY	
38	00	EDIT STOP KEY	
40	00	PLAY KEY	
41	00	REC + PLAY KEY	
42	00	REC + PAUSE KEY	
45	00	STAND-BY KEY	
88	*1	SHTL(+) KEY	With speed data
89	*1	JOG(+) KEY	With speed data
8A	*1	VAR SRH(+) KEY	With speed data
8B	*2	PLAY(+) KEY	With speed data
98	*1	SHTL(–) KEY	With speed data
99	*1	JOG(–) KEY	With speed data
9A	*1	VAR SRH(–) KEY	With speed data
9B	*2	PLAY(–) KEY	With speed data

*1: Tape speed is expressed by Data 0 in the following equation.

$$\text{TAPE SPEED} = 10^{\frac{\text{DATA0 [DEC]}}{64} - 2}$$

*2: Tape speed is expressed by Data 0 in the following equation.

$$\text{TAPE SPEED} = \text{x 1 (speed) x (1 + 0.001 x DATA0 [DEC])}$$

1.8 WARNING DETECTION CIRCUIT

1.8.1 Outline

This VTR has the warning mode. If something abnormal occurs in operation of the VTR, both the counter display and on-screen display indicate it by a warning code and the VTR furthermore enters the AUTO OFF mode at the same time.
In the case the set has entered a warning mode that activates the AUTO OFF mode, any kind of operation is inhibited until the set is turned on again after it is once turned off.
The warning mode can roughly be classified into two groups. The first group activates VTR protection function when there is something abnormal detected in the VTR (warning codes No. 79 and lower). The second group warns merely with warning indication when there is something abnormal detected in the VTR (warning codes No. 80 and higher).

Note:

- If the MENU switch No. 303: WARNING is set to "DISABLE (1)", the set does not enter the warning mode.
- If the MENU switch No. 343: SUB WARNING is set to "ENABLE (1)", the set does not enter specific warning modes though the MENU switch No. 303 is set to "ENABLE (0)".
- In the case the set has entered the AUTO OFF mode after a warning mode, all operations except turning off the power are disabled until the POWER switch is once turned off and again turned on.

1.8.2 Table of warning codes

1. Four-digits indication of warning code
Since every warning is indicated by four-digits code, detailed information about the warning is shown on the display when the set enters a warning status.

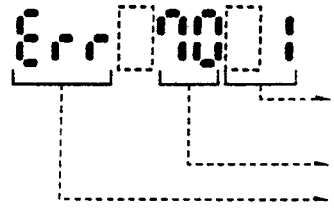

2. Memory of warning records
The set has recorded data on warnings which the set fell into in the past.
(Refer to 1.7.11 Method to call up warning records.)

- **Example of warning indication**

When "Err 70 1" appears on the display as a warning indication by way of example, it expresses that DRUM FG is not detected because the drum motor fails to run for some reason.

Unless otherwise specified, symbol number of a part belongs to the MCTL/SV board.

Code No.	Warning sensor	Sensing method	Mode/Operation	Cause and Remedy
01: Disconnection of leader tape detector LED				
01 01	Q1	When pin 38 of IC1 has high level for 240 msec or longer. Normal level at pin 38 of IC1 is 0 V.	AUTO OFF	Replace the LED.
02: Drum is dewed.				
02 01	Dew sensor (IC2 pin 75) Characteristic of dew sensor Relative humidity / Resistivity 75% / 20 kΩ or lower 100% / 200 kΩ or higher	When level at pin 75 of IC2 is 3 V or higher. As level at pin 75 of IC2 goes down to 2 V or lower, the warning is cancelled. In the case level at pin 75 of IC2 is bet-ween 2 V and 3 V at power activation, warning mode takes place depending on the past set status whether it was in a warning status or not when the power was lastly turned off.	After the cassette tape is ejected, the drum motor automatically starts running. When the drum recovers from the dewed condition, the warning is cancelled and the set is ready for normal operation. During dewed condition, the set doesn't receive any cassette tape.	If the set doesn't recover from the warning status though it has elapsed a considerably long time, it is thinkable that the dew sensor is faulty.
08: Low supply tension				
08 01	Tension sensor (IC2 pin 72)	When level at pin 72 of IC2 is lower than 0.2 V for 500 msec or longer as the mechanism is in the LOADING END status (except STANDBY OFF mode). Normal voltage at pin 72 of IC2 is as follows. In PLAY: 1.85 V approx. In STANDBY OFF: $0^{+0.1}_{-0}$ V	AUTO OFF	Abnormal operation of tension servo. Maladjustment of VR1 or VR2. (This case needs to adjust PLAY, LOAD and REV torque.) Failure of reel motor. Something wrong in the tape transport system.

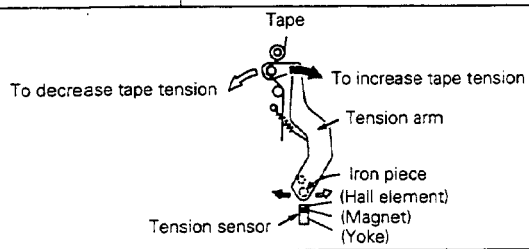

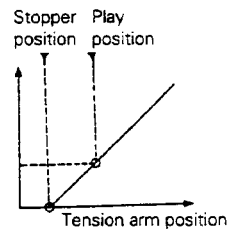

Unless otherwise specified, symbol number of a part belongs to the MCTL/SV board.

Code No.	Warning sensor	Sensing method	Mode/Operation	Cause

32: Incomplete loading (without warning indication)

32 01	Rotary encoder (CN1-①②③)	When loading does not finish within 8 sec.	After the mechanism once performs the unloading operation, it again enters the loading mode. If the mechanism fails in loading again, it ejects the cassette tape. No warning indication is shown on the display.	Rotary encoder is faulty. Loading motor is faulty. IC16 MDA (TA8405S) is faulty. Failure in loading mechanism. Cassette tape is defective.
32 02	SP REEL FG (IC2 pin 63)	When tape is slacked by 6 cm or longer in loading operation.		

Normal operation

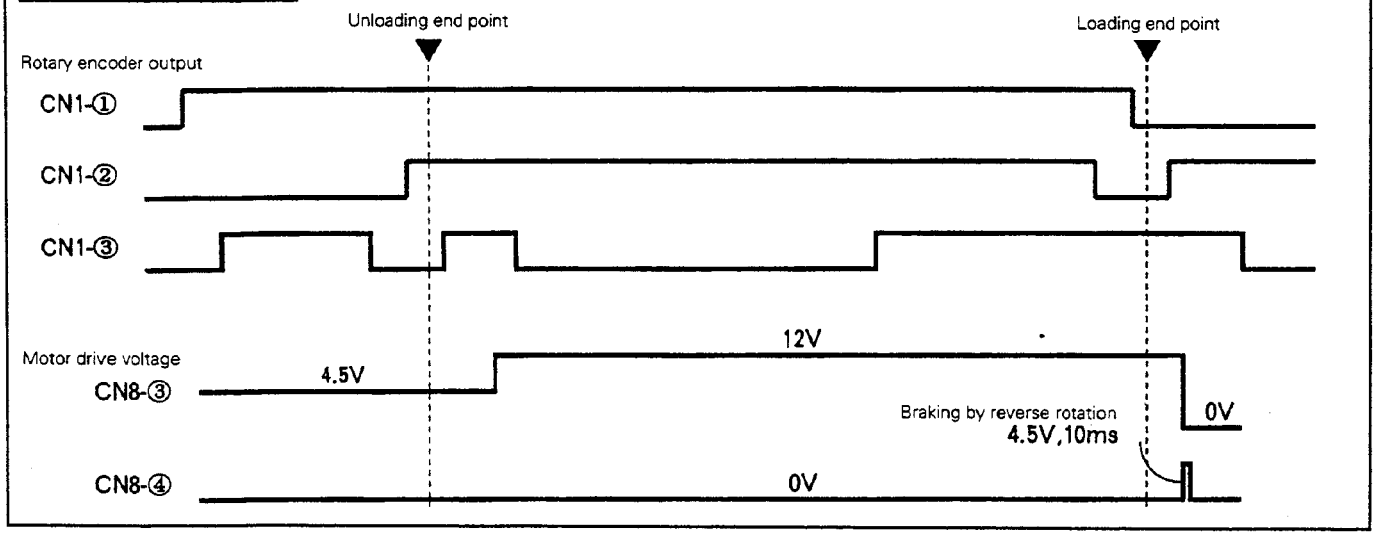

33: Incomplete unloading

33 01	Rotary encoder (CN1-①②③)	When unloading does not finish within 8 sec.	After the mechanism once performs the loading operation, it again enters the unloading mode. If the mechanism fails in unloading again, the set enters the AUTO OFF mode.	Rotary encoder is faulty. Loading motor is faulty. IC16 MDA (TA8405S) is faulty. Failure in loading mechanism. Cassette tape is defective.
33 02	SP REEL FG (IC2 pin 63)	When tape is slacked by 6 cm or longer in unloading operation.		

Normal operation

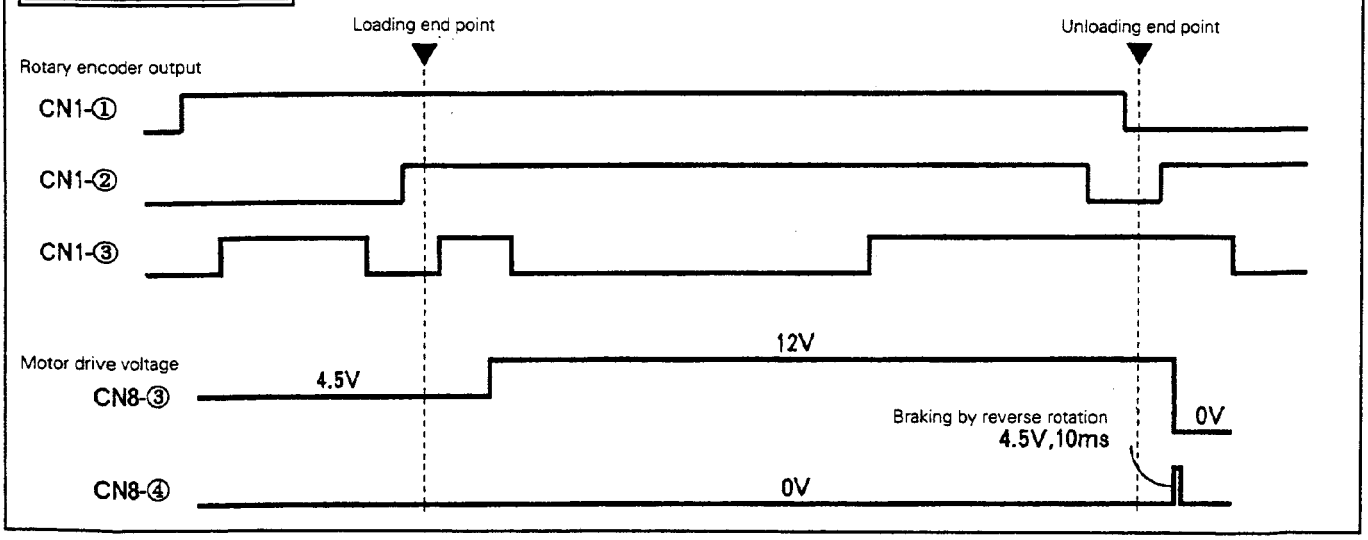

Unless otherwise specified, symbol number of a part belongs to the MCTL/SV board.

Code No.	Warning sensor	Sensing method	Mode/Operation	Cause

40: Incomplete intake (without warning indication)

40 01	Cassette switch (CN4-②) Insert switch (CN4-③)	When cassette tape is not taken in within 3 sec.	Cassette tape is ejected. No warning indication is shown on the display.	Cassette housing is defective. Failure of IC16 MDA (TA8405S). Cassette or insert switch is faulty. Cassette tape is defective.

Normal operation

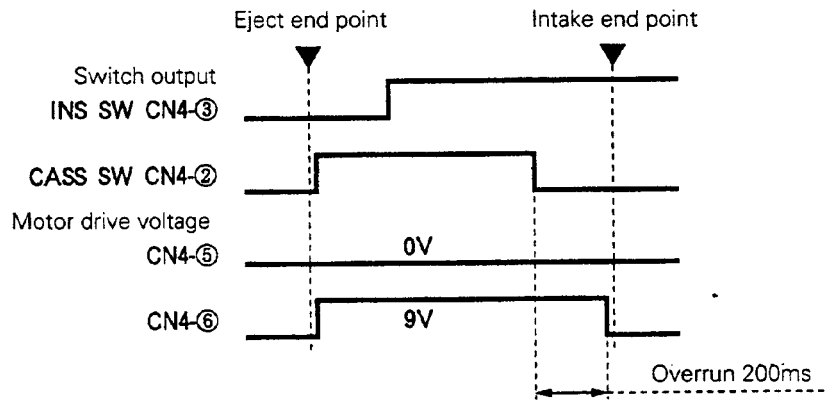

41: Incomplete eject (ejecting operation)

41 01	Cassette switch (CN4-②) Insert switch (CN4-③)	When cassette tape is not ejected within 3 sec.	After the mechanism once performs intake operation, it tries to eject cassette tape. If the mechanism fails in eject operation again, the set enters the AUTO OFF mode.	Cassette housing is defective. Failure of IC16 MDA (TA8405S). Cassette or insert switch is faulty. Cassette tape is defective.

Normal operation

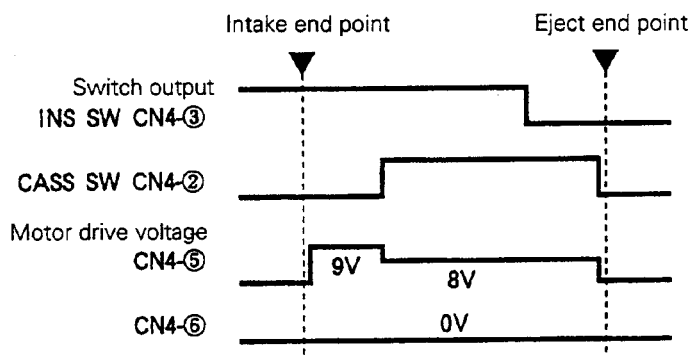

Unless otherwise specified, symbol number of a part belongs to the MCTL/SV board.

Code No.	Warning sensor	Sensing method	Mode/Operation	Cause
56: Break of tape				
56 01	SUP REEL FG (IC2pin63)	When supply/take-up reel rotates reverse for 6 cm long of tape in the SHORT FF/REW mode or for 3 cm long of tape in the SKIP FWD/REV mode.	Cassette tape is ejected.	Failure in reel servo circuit. Defective wiring between SERVO/M-CTL board and reel motor.
56 02	TU REEL FG (IC2pin62)			
56 03	SUP REEL FG (IC2pin63)	When the reel motor runs at a high speed exceeding the limit and 40 or more FG pulses are output within 1 sec with cassette tape being inserted. High speed exceeding the limit means:6 times/0.8 as fast as the normal when pinch roller is on, 60 times/0.6 as fast as the normal when pinch roller is off. Each speed can be found from winding diameter of tape and number of REEL FG pulses.	Cassette tape is ejected.	Failure in reel servo circuit. Defective wiring between SERVO/M-CTL board and reel motor.
56 04	TU REEL FG (IC2pin62)			
56 05	Tape begin sensor (IC1 pin 37) Tape end sensor (IC1 pin 36)	When both tape begin and tape end are detected at the same time for 500 msec or longer in a mode other than loading and unloading though cassette tape is inserted. In normal operation, sensor output is 3.5 V or higher.	Cassette tape is ejected.	Failure in tape begin sensor and tape end sensor. Leader tape sensor LED is abnormally orientated.
56 06	SUP REEL FG (IC2pin63)	When the supply reel runs for 7 rounds or more in the unloading mode. (120 pulses of SUP REEL FG are output for a period of one round of the supply reel.)	Cassette tape is ejected.	Failure in reel servo circuit. Defective wiring between SERVO/M-CTL board and reel motor.
56 07	SUP REEL FG (IC2pin63)	When the supply reel runs for 5 rounds or more in the loading mode. (120 pulses of SUP REEL FG are output for a period of one round of the supply reel.)	Cassette tape is ejected.	Failure in reel servo circuit. Defective wiring between SERVO/M-CTL board and reel motor.

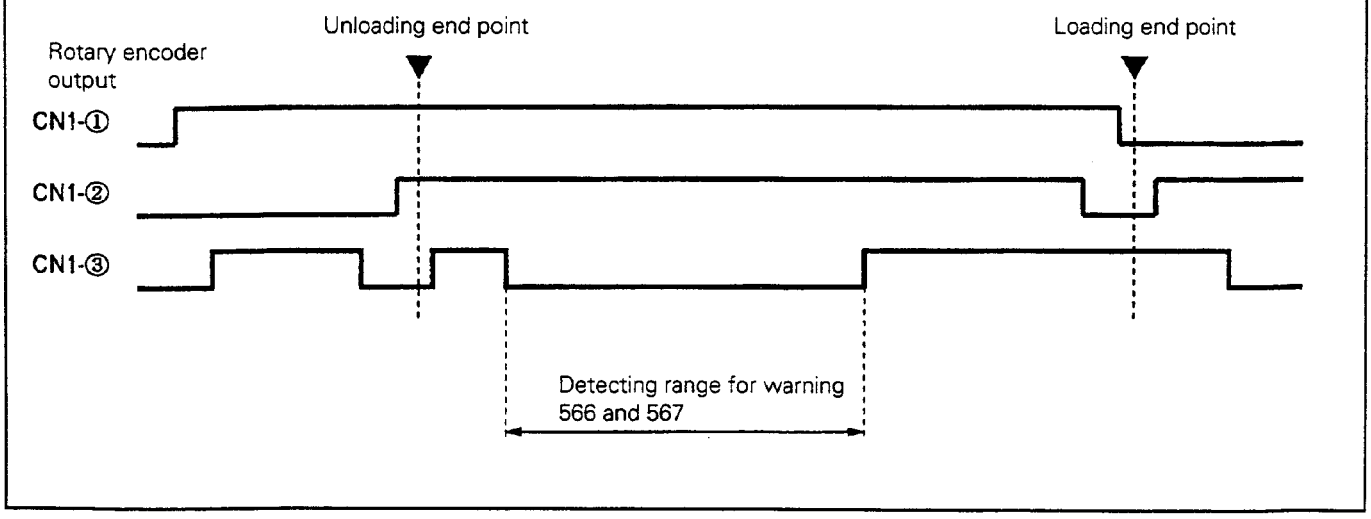

Unless otherwise specified, symbol number of a part belongs to the MCTL/SV board.

Code No.	Warning sensor	Sensing method	Mode/Operation	Cause
57: Tape end detecting				
57 01	Tape end sensor (IC1 pin 36)	When leader tape cannot be taken up into the cassette within 3 sec in the SHORT REW mode. In normal operation, tape end sensor output is: 3.5 V or higher for recording portion of tape, 1.5 V or lower for leader portion.	Cassette tape is ejected. As cassette tape is inserted again, warning indication disappears from the display.	Failure in reel servo circuit. Failure of tape end sensor. Leader tape detector LED is abnormally orientated. Cassette tape is defective.
57 02	Tape end sensor (IC1 pin 36)	When leader tape cannot be taken up into the cassette within 3 sec in the SKIP REV mode.		
58: Tape begin detecting				
58 01	Tape begin sensor (IC1 pin 37)	When leader tape cannot be taken up into the cassette within 3 sec in the SHORT FF mode. In normal operation, tape begin sensor output is: 3.5 V or higher for recording portion of tape, 1.5 V or lower for leader portion.	Cassette tape is ejected. As cassette tape is inserted again, warning indication disappears from the display.	Failure in reel servo circuit. Failure of tape begin sensor. Leader tape detector LED is abnormally orientated. Cassette tape is defective.
58 02	Tape begin sensor (IC1 pin 37)	When leader tape cannot be taken up into the cassette within 3 sec in the SKIP FWD mode.		
70: Abnormal operation of drum motor				
70 01	DRUM FG (IC2 pin 65)	When DRUM FG is not output for 2 sec or longer in the mode that the drum motor must run.	AUTO OFF	Defective wiring between SERVO/M-CTL board and drum motor. Failure in drum servo circuit. Failure of drum motor.
71: Abnormal operation of capstan motor				
71 01	CAPSTAN FG (IC2 pin 64)	When CAPSTAN FG signal (CAPx2 FG) is not output for 1 sec or longer in PLAY, CAPSTAN SEARCH, or REC mode.	AUTO OFF	Defective wiring between SERVO/M-CTL board and capstan motor. Failure in capstan servo circuit. Failure of capstan motor.

Unless otherwise specified, symbol number of a part belongs to the MCTL/SV board.

Code No.	Warning sensor	Sensing method	Mode/Operation	Cause
72: Abnormal operation of supply reel motor				
72 01	CAPSTAN FG (IC2pin64) SUP REEL FG (IC2pin63)	**Slack in tape** When the supply reel is not running though the capstan motor is running. (When no pulse of SUP REEL FG is output though 2304 or more pulses of CAPSTAN FG is output.)	AUTO OFF	Failure in reel servo circuit. Defective wiring between SERVO/M-CTL board and reel motor. Failure of reel motor.
72 02	SUP REEL FG (IC2pin63)	**Reel lock** When no SUP REEL FG is output within a certain period (4 sec at minimum to 12 sec at maximum) determined by winding diameter of tape.	AUTO OFF	Failure in reel servo circuit. Defective wiring between SERVO/M-CTL board and reel motor. Failure of reel motor.
72 03	SUP REEL FG (IC2pin63)	**Reverse rotation of reel** When the reel reverse rotates for 3 cm long (or more) of tape in a mode other than SHORT FF/REW and SKIP FWD/REV. (Tape length can be found from winding diameter of tape and number of REEL FG pulses.)	AUTO OFF	Failure in reel servo circuit. Defective wiring between SERVO/M-CTL board and reel motor. Failure of reel motor.
72 04	SUP REEL FG (IC2pin63)	**Overrun of reel** When the reel motor runs at a high speed exceeding the limit (100 = 60/0.6 times as fast as the normal speed) without cassette being inserted and 40 or more pulses of SUP REEL FG are output within 1 sec.	AUTO OFF	Failure in reel servo circuit. Defective wiring between SERVO/M-CTL board and reel motor. Failure of reel motor.
72 05	SUP REEL FG (IC2pin63)	**Abnormal operation of reel** When the supply reel turns less than half a round in the unloading mode. (120 pulses of SUP REEL FG are output in a period of one round of the supply reel.)	AUTO OFF	Failure in reel servo circuit. Defective wiring between SERVO/M-CTL board and reel motor. Failure of reel motor.
72 06	SUP REEL FG (IC2pin63)	**Abnormal operation of reel** When the supply reel turns less than half a round in the loading mode. (120 pulses of SUP REEL FG are output in a period of one round of the supply reel.)	AUTO OFF	Failure in reel servo circuit. Defective wiring between SERVO/M-CTL board and reel motor. Failure of reel motor.

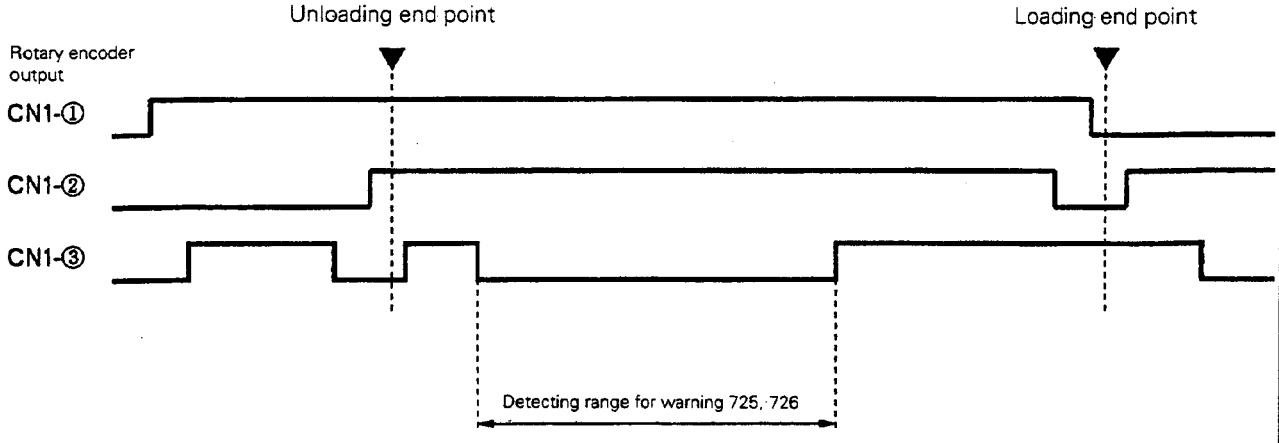

Unless otherwise specified, symbol number of a part belongs to the MCTL/SV board.

Code No.	Warning sensor	Sensing method	Mode/Operation	Cause

73: Abnormal operation of take-up reel motor

73 01	CAPSTAN FG (IC2 pin 64) TU REEL FG (IC 2 pin 62)	**Slack in tape** When the take-up reel is not running though the capstan motor is running. (When no pulse of TU REEL FG is output though 2304 or more pulses of CAPSTAN FG is output.)	AUTO OFF	Failure in reel servo circuit. Defective wiring between SERVO/M-CTL board and reel motor. Failure of reel motor.
73 02	TU REEL FG (IC 2 pin 62)	**Reel lock** When no TU REEL FG is output within a certain period (4 sec at minimum to 12 sec at maximum) determined by winding diameter of tape.	AUTO OFF	Failure in reel servo circuit. Defective wiring between SERVO/M-CTL board and reel motor. Failure of reel motor.
73 03	TU REEL FG (IC 2 pin 62)	**Reverse rotation of reel** When the reel reverse rotates for 3 cm long (or more) of tape in a mode other than SHORT FF/REW and SKIP FWD/REV.	AUTO OFF	Failure in reel servo circuit. Defective wiring between SERVO/M-CTL board and reel motor. Failure of reel motor.
73 04	TU REEL FG (IC 2 pin 62)	**Overrun of reel** When the reel motor runs at a high speed exceeding the limit (100 = 60/0.6 times as fast as the normal speed) without cassette being inserted and 40 or more pulses of TU REEL FG are output within 1 sec.	AUTO OFF	Failure in reel servo circuit. Defective wiring between SERVO/M-CTL board and reel motor. Failure of reel motor.
73 05	TU REEL FG (IC 2 pin 62)	**Winding diameter of tape cannot be sensed.** When the take-up reel does not run for a quarter of round within 3 sec in the tape winding diameter sensing mode just after cassette tape is taken in.	AUTO OFF	Failure in reel servo circuit. Defective wiring between SERVO/M-CTL board and reel motor. Failure of reel motor.

80: Abnormal communication (through JVC BUS) with CPUs

80 01	SYSCON CPU (SYS/TC IC103)	When error occurs in communication with 9-PIN CPU.	Warning only	Failure in 9-PIN CPU (SYS/TC IC114, 119). Failure in JVC BUS line.
80 02	SYSCON CPU (SYS/TC IC103)	When error occurs in communication with MCTL/SV CPU.	Warning only	Failure in MCTL/SV CPU (IC2). Failure in JVC BUS line.
80 03	SYSCON CPU (SYS/TC IC103)	When error occurs in communication with PV CPU.	Warning only	Failure in PV CPU (PV PRO IC402). Failure in JVC BUS line.
80 04	SYSCON CPU (SYS/TC IC103)	When error occurs in communication with OPERATION CPU.	Warning only	Failure in OPERATION CPU (OPE. IC1). Failure in JVC BUS line.
80 05	SYSCON CPU (SYS/TC IC103)	When error occurs in communication with TIME CODE CPU.	Warning only	Failure in TIME CODE CPU (SYS/TC IC501). Failure in JVC BUS line.
80 06	SYSCON CPU (SYS/TC IC103)	When error occurs in communication with AUDIO CPU.	Warning only	Failure in AUDIO CPU (DIG AUD IC21). Failure in JVC BUS line.
80 07	SYSCON CPU (SYS/TC IC103)	When error occurs in communication with RF CPU.	Warning only	Failure in RF CPU (RF PRO IC17). Failure in JVC BUS line.

Unless otherwise specified, symbol number of a part belongs to the MCTL/SV board.

Code No.	Warning sensor	Sensing method	Mode/Operation	Cause
81: Abnormal communication (through I^2C BUS) with digital processing ICs				Symbol numbers are located on PV PROCESS board
81 01	PV REC CPU (PV PRO. IC401)	When error occurs in communication with DCI-R.	Warning only	Failure in PV PROCESS board. Failure in DCI-R (IC16).
81 02	PV REC CPU (PV PRO. IC401)	When error occurs in communication with ECC-R1.	Warning only	Failure in PV PROCESS board. Failure in ECC-RI (IC12).
81 03	PV REC CPU (PV PRO. IC401)	When error occurs in communication with ECC-R2.	Warning only	Failure in PV PROCESS board. Failure in ECC-R2 (IC14)
81 04	PV REC CPU (PV PRO. IC401)	When error occurs in communication with SHUFF-R.	Warning only	Failure in PV PROCESS board. Failure in SHUFF-R (IC3)
81 05	PV REC CPU (PV PRO. IC401)	When error occurs in communication with AUDIO-R1.	Warning only	Failure in PV PROCESS board. Failure in AUDIO-R1 (IC304)
81 06	PV REC CPU (PV PRO. IC401)	When error occurs in communication with AUDIO-R2.	Warning only	Failure in PV PROCESS board. Failure in AUDIO-R2 (IC305)
81 07	PV PB CPU (PV PRO. IC402)	When error occurs in communication with DCI-P.	Warning only	Failure in PV PROCESS board. Failure in DCI-P (IC31)
81 08	PV PB CPU (PV PRO. IC402)	When error occurs in communication with ECC-P1.	Warning only	Failure in PV PROCESS board. Failure in ECC-P1 (IC40)
81 09	PV PB CPU (PV PRO. IC402)	When error occurs in communication with ECC-P2.	Warning only	Failure in PV PROCESS board. Failure in ECC-P2 (IC42)
81 10	PV PB CPU (PV PRO. IC402)	When error occurs in communication with SHUFF-P.	Warning only	Failure in PV PROCESS board. Failure in SHUFF-P (IC55)
81 11	PV PB CPU (PV PRO. IC402)	When error occurs in communication with AUDIO-P1.	Warning only	Failure in PV PROCESS board. Failure in AUDIO-P1 (IC313)
81 12	PV PB CPU (PV PRO. IC402)	When error occurs in communication with AUDIO-P2.	Warning only	Failure in PV PROCESS board. Failure in AUDIO-P2 (IC316)
82: Malfunction of EEPROM				
82 01	SYSCON CPU (SYS/TC IC103)	When error occurs in communication with SYSCON EEPROM.	Warning only	Failure in SYSCON EEPROM (SYS/TC IC109). Defective board pattern of SYS/TC board.
82 02	MCTL/SV CPU (IC2)	When error occurs in communication with MECHA/SERVO EEPROM.	Warning only	Failure in EEPROM (IC8). Defective board pattern.
82 03	OPERATIONCPU (OPE.IC1)	When error occurs in communication with OPERATION EEPROM.	Warning only	Failure in OPERATION EEPROM (OPERATION IC10). Defective pattern of OPERATION board.
82 04	AUDIO CPU (AUDIO IC21)	When error occurs in communication with AUDIO EEPROM.	Warning only	Failure in AUDIO EEPROM (DIG AUD IC22). Defective pattern of DIG AUD board.
82 05	RF CPU (RF PRO. IC17)	When error occurs in communication with RF EEPROM.	Warning only	Failure in RF EEPROM (RF PROCESS-1, -2, IC9) Defective pattern of RF PRO-1, -2 board.
84: Abnormal SYSCON REFERENCE signal				
84 01	SYSCON CPU (SYS/TC IC103)	When SERVO REFERENCE signal is abnormally input.	Warning only	Failure in MCTL/SV board. Defective wiring between SYS/TC and MCTL/SV boards.
85: Abnormal MCTL/SV REFERENCE signal				
85 01	MCTL/SV CPU (IC2)	When FRP REFERENCE signal is abnormally input.	Warning only	Failure in MCTL/SV board. Defective pattern of MCTL/SV board.
86: Abnormal TC REFERENCE signal				
86 01	TC CPU (SYS/TC IC501)	When REF FIELD signal is abnormally input.	Warning only	Failure in MCTL/SV board. Defective wiring between SYS/TC and MCTL/SV boards.

Unless otherwise specified, symbol number of a part belongs to the PV PROCESS board.

Code No.	Warning sensor	Sensing method	Mode/Operation	Cause

91 XX: Abnormal digital video input/output (DIG I/O)
(Warning in this category is indicated by the warning code "91" with sub-data "XX" each.
Each sub-data "XX" which is expressed in a hexadecimal number is converted into a binary number. In a converted binary number, the bit equivalent to "1" specifies the warning in detail as shown in the table below.

Lower 4bits	0	PV PB CPU (PV PRO. IC402)	When period of output data to PV PROCESS board is not locked.	Warning only	Abnormal output data. (CN1-25A to 32B) Defective wiring between PV PROCESS board and DIG I/O board.
	1	PV PB CPU (PV PRO. IC402)	When output data to PV PROCESS board is absent.	Warning only	No output data. (CN1-25A to 32B) Defective wiring between PV PROCESS board and DIG I/O board.
	2	PV PB CPU (PV PRO. IC402)	When output data to PV PROCESS board is abnormally output.	Warning only	Abnormal output data. (CN1-25A to 32B) Defective wiring between PV PROCESS board and DIG I/O board.
	3	PV PB CPU (PV PRO. IC402)	When signal format is different.	Warning only	Composite serial digital signal is input. (Check input signal.)
Upper 4bits	4	PV PB CPU (PV PRO. IC402)	When input data is absent.	Warning only	No input data. Defective wiring between input terminal and DIG I/O board.
	5	PV PB CPU (PV PRO. IC402)	When signal input is abnormal.	Warning only	Abnormal input data. Defective wiring between input terminal and DIG I/O board.
	6	PV PB CPU (PV PRO. IC402)	When input signal is not locked.	Warning only	Abnormal input data. Defective wiring between input terminal and DIG I/O board.
	7	PV PB CPU (PV PRO. IC402)	When input data is abnormally input.	Warning only	Abnormal input data. Defective wiring between input terminal and DIG I/O board.

C0 XX: Malfunction of mechanism (without cassette tape inserted)
(Warning in this category is activated when "DIAG WARNING" is on, and is indicated by the warning code "C0" with sub-data "XX" each.)
Each sub-data "XX" which is expressed in a hexadecimal number is converted into a binary number. In a converted binary number, the bit equivalent to "1" specifies the warning in detail as shown in the table below.

Lower 4bits	0	Disconnection of leader tape detector LED (same as warning 01)	Warning only	Same as warning 01.
	1	Drum is dewed. (same as warning 02)	Warning only	Same as warning 02.
	2	Supply reel motor is abnormal. (same as warning 72)	Warning only	Same as warning 72.
	3	Take-up reel motor is abnormal. (same as warning 73)	Warning only	Same as warning 73.
Upper 4bits	4	Reel solenoid is abnormal.	Warning only	Failure of reel solenoid. Defective wiring between reel motor and REEL MDA board.
	5	Drum motor is abnormal. (same as warning 70)	Warning only	Same as warning 70.
	6	Capstan motor is abnormal. (same as warning 71)	Warning only	Same as warning 71.
	7	Weak supply tension. (same as warning 08)	Warning only	Same as warning 08.

Detail of error is expressed by 2-bytes code. Namely, error code is converted into binary number, and the bit equivalent to "1" expresses the error in detail.
Example: Error code is "21 00".
Error code 1 ... "21"
Error code 2 ... "00"
If error sub-code is converted into binary number according to the table below, bit 7 is equivalent to bit 0 in binary number.
Error code 1 ... "0010 0001"
Error code 2 ... "0000 0000"

Hexadecimal number	0	1	2	3	4	5	6	7
Binary number	0000	0001	0010	0011	0100	0101	0110	0111
Hexadecimal number	8	9	A	B	C	D	E	F
Binary number	1000	1001	1010	1011	1100	1101	1110	1111

1.9 TEST MODE

This VTR has the test mode to be used as the exclusive mode for adjustment.

1.9.1 Accessing to test mode

1. Take cassette tape out of the set and turn off the power switch.
2. Turn on the power switch again, and press the COUNTER RESET, FF and REW buttons together within 2 seconds after the counter display is lighted up.
3. Both the on-screen display and counter display show the TEST MODE.
4. Select a desired mode by pressing the MENU (UP) or SET (DOWN) button.
5. Press the COUNTER RESET button to execute the mode being selected on the display.
6. When the automatic adjustment mode is selected, the set starts automatic adjustment with "Perform" indication (P∗∗++) on the display. When "Perform" indication disappears from the display, the automatic adjustment is complete. If the COUNTER RESET button is pressed prior to completion of automatic adjustment, the automatic adjustment is compulsively finished. (No adjustment value is memorized in this case.)
7. In the manual adjustment mode, press the SELECT button after setting adjustment values to fix and store those setting values. (Adjustment values set in the manual adjustment mode are not stored in the memory unless the SELECT button is pressed.)
8. For quitting the LEVEL marker output mode, press the COUNTER RESET button.

Notes: • When the MENU switch No. 357 "DIAG AT POWER ON" is being set to "ON(1)", it is inhibited to access the TEST MODE.
• When the MENU switch No. 002 "OPERATION LOCK" is being set to "ON(1)", the TEST MODE cannot be activated.

Table 1-9-1 Table of test modes

On-screen display	Mode	VTR operation	Remark
50 : AU LINE OUT LV. (M)	Audio EE adjustment	Adjusting AUDIO OUT level	3.9 ADJUSTMENT OF AUDIO CIRCUIT
58 : SEARCH AU INSP. (M)	Search audio adjustment	Output the search audio in AUDIO OUT	
5D : RELL CAP FG. (A)	REEL/CAP FG automatic adjustment	Adjusting the FG duty	3.2.1 Motor FG duty adjustment
5E : CTL HIGHT (M)	A/C head height adjustment	Recording CTL signal only	
5F : REV TENSION (M)	REV tension adjustment	Playback in REV (–X1) mode	2.7.2.4 Reverase torque adjustment
60 : FWD TENSION (M)	FWD tension adjustment	Normal playback	2.7.2.1 Supply torque adjustment
61 : LOAD TORQUE (M)	Loading torque adjustment	Tape running in loading torque	2.7.2.2 Loading torque adjustment
62 : PLAY TORQUE (M)	PLAY torque adjustment	Normal playback	2.7.2.3 Take-up torque adjustment
63 : LOW TORQUE (M)	Emergency roll	To be low torque as reel torque	1.5 MANUAL EJECTION OF CASSETTE TAPE IN AN EMERGENCY
64 : SW POINT (A)	Automatic switching point adjustment	Setting the best switching point	3.2.4 PB switching poit adjustment
65 : LOAD/UNLOAD (M)	Loading/unloading	Loading/unloading with JOG dial	Inactivated with tape loaded
66 : MODE MOTOR (M)	Mode motor rotating	Rotating the mode motor with JOG dial	Inactivated with tape loaded
67 : X DISTANCE (M)	X-value adjustment	Enable to playback the adjustment tape	2.8.2 X-value adjustment
68 : TRACKING (A)	Automatic tracking adjustment	Setting the best tracking position	3.2.3 Tracking preset adjustment
69 : VHS TAPE PB (M)	Playback of VHS tape	Playback of VHS tape is activated	For tape transport system adjustment
6A : LINEARITY (A)	Automatic linearity measuring mode	Activated automatic linearity measuring mode	No indication. Activated by RS-232C control only.
6F : RF CLK 1/2 (M)	1/2-divided clock	Recording 1/2-divided clock of RF clock	D80 and D85 set only (3.3.4 1 + D adjustment)
70 : RF CLK 1/4 (M)	1/4-divided clock	1/4	D80 and D85 only
71 : RF CLK 1/8 (M)	1/8-divided clock	1/8	D80 and D85 only
72 : RF REC C&F (A)	Automatic REC current adjustment	Setting the best REC current value	D80 and D85 only (3.4.1 REC current adj.)
78 : LEVEL MARK1 (M)	Level marker output 1	Mix the level maker 1 in VIDEO OUT	Y level : 100%, Color level: 100 %, Setup level: 0 %
79 : LEVEL MARK2 (M)	Level marker output 2	Mix the level maker 2 in VIDEO OUT	Y level : 100%, Color level: 75 %, Setup level: 0 %
7A : BLACK BURST (M)	Black burst output 1	Output the black burst	Setup level : 0%
7B : Y TIMING (M)	Y signal timing adjustment	Save the adjustment data in EEP-ROM	3.6.8 SYNC phase adjustment
7C : CPN C TIMING (M)	Component C signal timing adjustment	Save the adjustment data in EEP-ROM	3.7.2 Component signal output delay adjustment
7D : CPS C TIMING (M)	Composite C signal timing adjustment	Save the adjustment data in EEP-ROM	3.7.9 Y/C color delay adjustment
7E : BBOUT & MARK1 (M)	Black burst output 2	Mix the level maker 1 and black burst in VIDEO OUT	Test mode No. 78 + No. 7A
84 : TR METER (M)	Automatic TR meter adjustment	Correcting sensitivity of tracking meter	
85 :TR VR PRESET(A)	Automatic TR VR preset adjustment	Correcting center position of tracking VR	3.3.2 Tracking VR preset adjustment

(A): Automatic adjustment, (M): Manual adjustment

1.10 SELF-DIAGNOSIS MODE

This VTR has a self-diagnosis function as the self-diagnosis mode to diagnose the VTR condition.

Notes: • When the MENU switch No. 357 "DIAG AT POWER ON" is being set to "ON(1)", it is inhibited to access the SELF-DIAGNOSIS MODE.
• When the MENU switch No. 002 "OPERATION LOCK" is being set to "ON(1)", the SELF-DIAGNOSIS MODE cannot be activated.

1.10.1 Way of accessing self-diagnosis mode

1. Remove cassette tape from the VTR and turn it off.
2. Turn on the VTR again, and press the EJECT and PLAY buttons simultaneously within 2 seconds after the counter display is turned on.

<On-screen display>

9P : %% MS : %% PV : %% OP : %%
TC : %% AU : %% RF : %%

11 : M / S TR DATA
** 00 00
NO CASSETT
TC 00:00:00:00

Notes: • "%%" shows rate (in percentage) of error occurrence between the SYSCON CPU and slave CPU. For normal sets, rate indication is below 50 percent.
• "**" shows message as below.
EX. P: under diagnosis, ED: finish, ER: error occurrence

Fig. 1-10-1 Display in self-diagnosis mode

3. Both the on-screen display and counter display turn into the self-diagnosis display mode.
4. Press the MENU (UP) button or SET (DOWN) button to select a desired self-diagnosis mode.
5. Press the COUNTER RESET button to execute the self-diagnosing.
6. When there is something abnormal detected by the self-diagnosis, an error message appears on both the displays.
7. There are two kinds of self-diagnosis modes; one automatically finishes after execution of self-diagnosis and the other needs to press the SELECT button to finish the mode.
8. To quit the self-diagnosis mode as a whole, turn off the VTR.

1.10.2 Explanation of error messages

When there is something abnormal detected by self-diagnosis, such an error message as shown by the following example appears on the display. This case shows that a trouble expressed by the sub-code "0100" (failure of leader tape detecting LED) occurs is detected by the self-diagnosis mode "12: MECHACHECK - NO CAS".

<On-screen display>

9P : %% MS : %% PV : %% OP : %%
TC : %% AU : %% RF : %%

12 : MECHACHECK-NO CAS
ER 01 00
NO CASSETT
TC 00:00:00:00

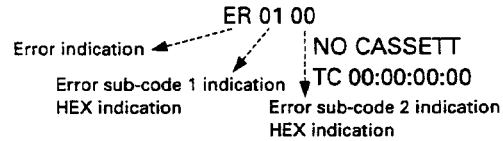

Fig. 1-10-2 Error message display (Example)

Table 1-10-1 Self-diagnosis table

On-screen display	Detail of self-diagnosis	Finishing manner	How to cope with error	Remark
11 : M/S TR DATA	Display of adjustment/setting data on tracking	Automatic finish	—	
12 : MECHACHECK-NO CAS	Self-diagnosis of the mechanism when the set is loaded with no cassette tape.	Automatic finish	Refer to 1.10.9.	
13 : MECHACHECK-IN CAS	Self-diagnosis of the mechanism when the set is loaded with a cassette tape.	Automatic finish	Refer to 1.10.9.	
14 : M/S EEPROM CHECK	Self-diagnosis of reading/writing of the MECHA/SERVO EEPROM.	Automatic finish	Refer to Warning code No. 8202.	
15 : M/S SW POINT CHECK	Display of adjustment data on switching point with playback of a tape.	Automatic finish	—	
19 : AUDIO AD-DA CHECK	Self-diagnosis of the AUDIO circuit (AD-DA). (Refer to 1.10.6.)	Automatic finish	Refer to 1.10.6.	D80/D85
1A : AU AD-PV-DA CHECK	Self-diagnosis of the AUDIO circuit (AD-PV-DA). (Refer to 1.10.6.)	Automatic finish	Refer to 1.10.6.	D80/D85
1B : AU AES/EBU CHECK	Self-diagnosis of the DIGITAL AUDIO INPUT/OUTPUT circuit. (Refer to 1.10.6.)	Automatic finish	Refer to 1.10.6.	D80/D85
22 : PV DCI RETURN	Self-diagnosis of the PV PROCESS circuit. (Refer to 1.10.5.)	Automatic finish	Refer to 1.10.5.	D80/D85
27 : DIG I/O CHECK	Error indication only for the current error	Automatic finish	Refer to 1.10.9.	D80/D85
34: OP LED CHECK	Self-diagnosis of LED and switch of OPERATION board Each time the COUNTER RESET button is pressed, LED of the counter display goes on or goes out. When an operation button is pressed, the button lights.	Press SELECT button.	Refer to 1.10.3.	
35 : OP VR/DIAL CHECK	Self-diagnosis of VRs (DA1, DA2, TRACKING), SEARCH dial and AUDIO METER LED of the OPERATION board	Press SELECT button.	Refer to 1.10.4.	
36 : OP EEPROM CHECK	Self-diagnosis of reading/writing of the OPERATION EEPROM	Automatic finish	Refer to Warning code No. 8203.	
3C : LTC LOOP CHECK	Self-diagnosis of LTC circuit	Automatic finish	Refer to 1.10.7.	D80/D85
3D : VITC LOOP CHECK	Self-diagnosis of VITC circuit	Automatic finish	Refer to 1.10.8.	D80/D85
45 : SYS EEPROM CHECK	Self-diagnosis of reading/writing of the SYSCON EEPROM	Automatic finish	Refer to Warning code No. 8201.	
46 : JVC BUS CHECK	Error indication only	Automatic finish	Refer to 1.10.9.	
4C : RF RCAL/FCAL CH1-H	Display of adjustment data on RF REC current of preceding CH1 head	Automatic finish	—	D80/D85
4D : RF RCAL/FCAL CH1-L	Display of adjustment data on RF REC current of following CH1 head	Automatic finish	—	D80/D85
4E : RF RCAL/FCAL CH2-H	Display of adjustment data on RF REC current of preceding CH2 head	Automatic finish	—	D80/D85
4F : RF RCAL/FCAL CH2-L	Display of adjustment data on RF REC current of preceding CH2 head	Automatic finish	—	D80/D85

1.10.3 OPERATION LED CHECK mode

When there is a failure in a switch on the front panel or in the LED display, access the OPERATION LED CHECK mode to examine the trouble. The following explains the display in detail when the 34: OPERATION LED CHECK mode is activated.

1. Access the SELF-DIAGNOSIS mode and press the COUNTER RESET button.
2. Numbers that show setting positions of switches are shown on the counter display. Setting position of each switch is expressed by "0", "1" and "2" (setting position of 2-position switch is expressed by "0" or "1") in order from the upper position to the lower position.

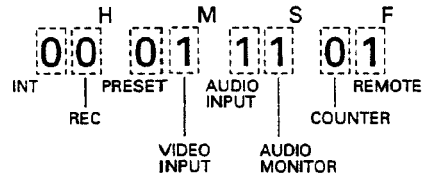

Fig. 1-10-3 Self-diagnosis display for switch settings (initial settings on shipment)

3. Press the COUNTER RESET button, and all LED indicators are turned on.
4. Press the SELECT button to quit the OPERATION LED CHECK mode.

1.10.4 OPERATION VR/DIAL CHECK mode

When there is a failure in a control (VR) on the front panel or in the SEARCH dial, access the OPERATION VR/DIAL CHECK mode to examine the trouble. The following explains the display in detail when the 35: OPERATION VR/DIAL CHECK mode is activated.

1. Access the SELF-DIAGNOSIS mode and press the COUNTER RESET button.
2. Data (HEX indication) on current setting positions of the SEARCH dial, TRACKING VR, DA1 VR, DA2 VR are shown on the counter display. As the TRACKING VR is turned in this mode, the level meter changes.

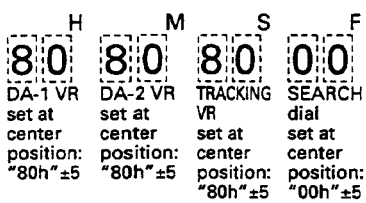

Fig. 1-10-4 Self-diagnosis display for SEARCH dial, VRs (setting at center position)

3. Press the SELECT button to quit the OPERATION VR/DIAL CHECK mode.

1.10.5 Self-diagnosis of PV PROCESS circuit

When there is something abnormal in playback picture, examine the PV PROCESS circuit by utilizing this self-diagnosis function. As "22: PV DCI RETURN" mode is activated, DCI R and DCI P are short-circuited as shown in Fig. 1-10-5 and self-diagnosis of the PV PROCESS circuit is executed. Explaining in detail, test data (internal color-bar signal) prepared by the SHUFF REC circuit is input to the PB PV PROCESS circuit through the REC PV PROCESS circuit. If there is a failure in the PV PROCESS circuit, error message "ER" appears on the display. Therefore, it is cleared that the abnormal picture results from a failure in the PV PROCESS board or from other reason.

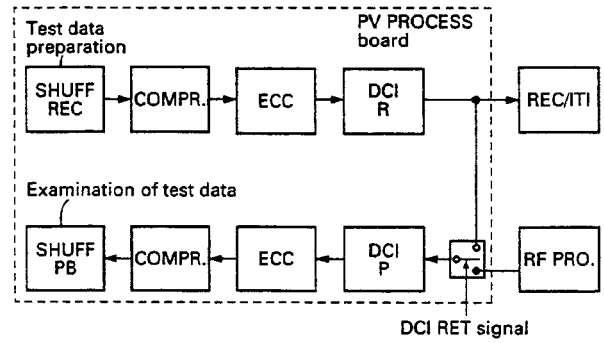

Fig. 1-10-5 Self-diagnosis of PV PROCESS circuit

1.10.6 Self-diagnosis of AUDIO circuit

When there is something abnormal in playback audio, examine the AUDIO circuit by utilizing this self-diagnosis function.

1. AUDIO AD-DA CHECK mode

As "19: AUDIO AD-DA CHECK" mode is activated, A/D and D/A are short-circuited as shown in Fig. 1-10-6 and self-diagnosis of the DIG AUDIO board is executed. Explaining in detail, test data (sine-wave signal) generated by the AUDIO-CPU is input to the D/A circuit through the A/D circuit. If there is a failure in the DIG AUDIO board, error message "ER" appears on the display. Therefore, it is cleared that the abnormal audio results from a failure in the DIG AUDIO board or from other reason.

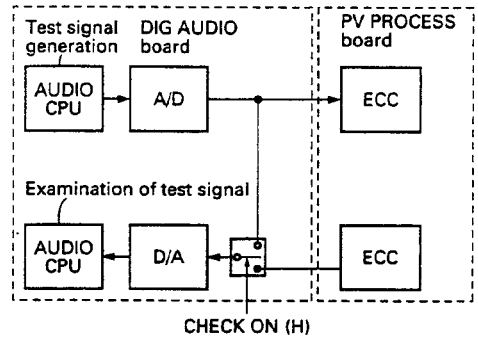

Fig. 1-10-6 Self-diagnosis of DIG AUDIO circuit

2. AUDIO AD-PV-DA CHECK mode

When "1A: AUDIO AD-PV-DA CHECK" mode is activated in the same manner as the AUDIO AD-DA CHECK mode, self-diagnosis of the AUDIO system of PV PROCESS circuit is executed.

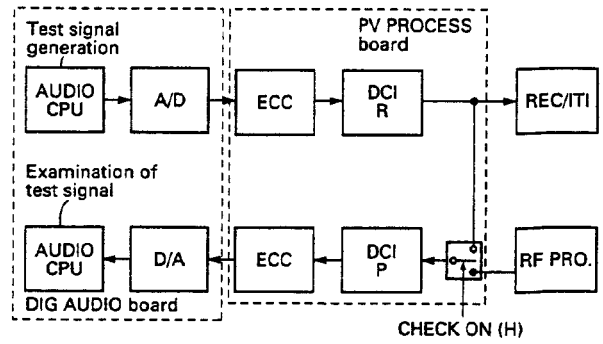

Fig. 1-10-7 Self-diagnosis of AUDIO PV PROCESS circuit

3. AU AES/EBU CHECK mode

When "1B: AU AES/EBU CHECK" mode is activated in the same manner as the above, self-diagnosis of the AUDIO system of DIG I/O circuit is to be executed. Differently from the preceding check modes, this mode needs to make a shortcircuit between the digital audio input and output terminals with a shorting wire. As a result of shortcircuit between the DIG AUD OUT and DIG AUD IN terminals, test signal (sine-wave signal) generated by the AUDIO CPU is input to the D/A circuit through the A/D circuit, DIG AUD OUT and DIG AUD IN terminals. If there is a failure in the AUDIO system of DIG I/O circuit, error message "ER" appears on the display. Therefore, it is cleared that the abnormal audio results from a failure in the AUDIO system of DIG I/O circuit or from other reason.

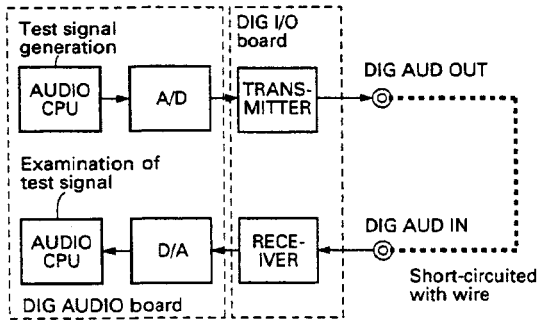

Fig. 1-10-8 Self-diagnosis of AUDIO DIG I/O circuit

1.10.7 LTC LOOP CHECK mode

When "3C: LTC LOOP CHECK" mode is activated with shortcircuit between the LTC IN and OUT terminals, self-diagnosis of the LTC circuit is to be executed as shown in Fig. 1-10-9. Test signal generated by the LTC GEN circuit is input to the LTC READER circuit through the short-circuited LTC OUT and IN terminals. When error message "ER" appears on the display in this check mode, it is thinkable that there is a failure in the LTC GEN, LTC READER or LTC circuit.

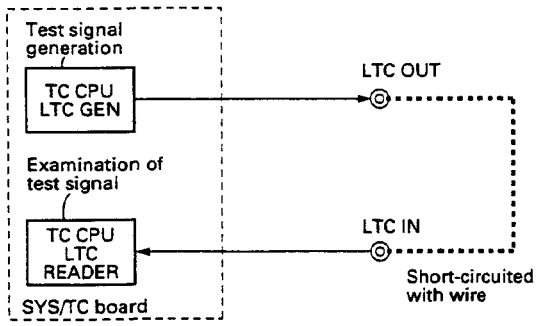

Fig. 1-10-9 Self-diagnosis of LTC circuit

1.10.8 VITC LOOP CHECK mode

When "3D: VITC LOOP CHECK" mode is activated with shortcircuit between the VIDEO LINE IN and OUT terminals, self-diagnosis of the VITC circuit is to be executed as shown in Fig. 1-10-10. Short-circuiting between the VIDEO LINE IN and OUT terminals makes loop test of the VITC circuit possible.

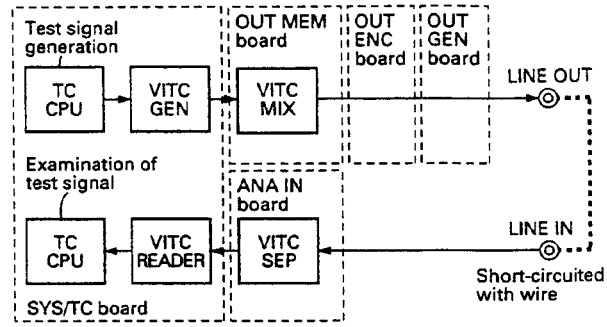

Fig. 1-10-10 Self-diagnosis of VITC circuit

1.10.9 Error sub-code indications

When an error is detected as a result of the following self-diagnoses, detail of the error is indicated by an error sub-code of HEX (hexadecimal) number.

1. 12: MECHACHECK - NO CAS

Detail of error is expressed by 2-bytes sub-code. Namely, error sub-code is converted into binary number, and the bit equivalent to "1" expresses the error in detail.

Example: Error sub-code is "21 00".
Error sub-code 1 ... "21"
Error sub-code 2 ... "00"

If error sub-code is converted into binary number according to the table below, bit 7 is equivalent to bit 0 in binary number.
Error sub-code 1 ... "0010 0001"
Error sub-code 2 ... "0000 0000"

According to the following table, the above data express that there are "disconnection of leader tape detecting LED" and "failure in drum motor".

Hexadecimal number	0	1	2	3	4	5	6	7
Binary number	0000	0001	0010	0011	0100	0101	0110	0111
Hexadecimal number	8	9	A	B	C	D	E	F
Binary number	1000	1001	1010	1011	1100	1101	1110	1111

		bit	Detail of error	Coping with error
Sub-code 1	Lower 4bits	0	Disconnection of leader tape detecting LED	Refer to "Warning: 0101".
		1	Drum is dewed.	Refer to "Warning: 0201".
		2	Supply reel motor is faulty.	Refer to "Warning: 72".
		3	Take-up reel motor is faulty.	Refer to "Warning: 73".
	Upper 4bits	4	Reel brake solenoid is faulty.	Defect of reel solenoid
		5	Drum motor is faulty.	Refer to "Warning: 7001".
		6	Capstan motor is faulty.	Refer to "Warning: 7101".
		7	Low supply tension	Refer to "Warning: 0801".
Sub-code 2	Lower bits	0	Failure in loading	Refer to "Warning: 32".
		1	Failure in unloading	Refer to "Warning: 33".
		2 | 7	Not used always 0	Not used

2. 13: MECHACHECK - IN CAS

Detail of error is expressed by 2-bytes sub-code in this check mode. For detail of sub-code, refer to the above item 1, "12: MECHACHECK - NO CAS".

		bit	Detail of error	Coping with error
Sub-code 1	Lower 4bits	0	Failure in intake	Refer to "Warning: 40".
		1	Detection of tape begin	Refer to "Warning: 58".
		2	Detection of tape end	Refer to "Warning: 57".
		3	Supply reel motor is faulty.	Refer to "Warning: 72".
	Upper 4bits	4	Take-up reel motor is faulty.	Refer to "Warning: 73".
		5	Failure in loading	Refer to "Warning: 32".
		6	Abnormal pinch roller pressure	Defect of pinch solenoid
		7	Failure in unloading	Refer to "Warning: 33".
Sub-code 2	Lower bits	0	Failure in ejection	Refer to "Warning: 4101".
		1 | 7	Not used always 0	Not used

3. 27: DIG I/O CHECK

Detail of error is expressed by 1-byte sub-code in this check mode. For detail of sub-code, refer to the preceding item 1, "12: MECHACHECK - NO CAS".

		bit	Detail of error	Coping with error
Sub-code 1	Lower 4bits	0	Abnormal H period of output data	Refer to "Warning: 91xx".
		1	Absence of output data	Refer to "Warning: 91xx"
		2	Abnormal data output	Refer to "Warning: 91xx".
		3	Different SDI input signal format	Refer to "Warning: 91xx".
	Upper 4bits	4	Absence of SDI input signal	Refer to "Warning: 91xx".
		5	Abnormal SDI input signal	Refer to "Warning: 91xx".
		6	Abnormal H period of SDI input signal	Refer to "Warning: 91xx".
		7	Abnormal input of SDI signal	Refer to "Warning: 91xx".

4. 46: JVC BUS CHECK

Faulty CPU is indicated by 2-bytes sub-code in this check mode.

Sub-code	Detail of error	Coping with error
1100	9-PIN CPU is faulty.	Refer to "Warning: 8001".
1200	MCTL/SV CPU is faulty.	Refer to "Warning: 8002".
1300	PV CPU is faulty.	Refer to "Warning: 8003".
1400	OPERATION CPU is faulty.	Refer to "Warning: 8004".
1500	TIME CODE CPU is faulty.	Refer to "Warning: 8005".
1600	AUDIO CPU is faulty.	Refer to "Warning: 8006".
1700	RF CPU is faulty.	Refer to "Warning: 8007".

APPENDIX: Notation of Roman alphabet on counter display

On the counter display, each letter of Roman alphabet is transcribed as shown in the following table.

Roman letter	Shown as	Roman letter	Shown as	Roman letter	Shown as	Roman letter	Shown as	Roman letter	Shown as
A		E		I		n		S	
b		F		J		O		T	
c		g		L		P		U	
d		H		M		r		Y	

SECTION 2

MECHANISM ADJUSTMENT

Table of contents

2.1 GENERAL DESCRIPTION 2-1
2.1.1 Precautions 2-1
2.1.2 General tools necessary for mechanism adjustment 2-1
2.1.3 Special tools for mechanism adjustment 2-1
2.1.4 Test instrument necessary for mechanism adjustment 2-2
2.1.5 Specifications of alignment tape 2-2
2.2 STANDARD OF MAIN PARTS REPLACEMENT 2-2
2.2.1 Location of main parts 2-3
2.2.2 Check and maintenance table 2-3
2.2.3 Cleaning 2-4
2.2.4 Oiling and greasing 2-4
2.3 REPLACEMENT OF MAIN PARTS 2-5
2.3.1 Replacement of cassette housing assembly 2-5
2.3.2 Replacement of drum assembly 2-6
Check and adjustment flowchart after drum replacement 2-8
2.3.3 Replacement of AC head 2-9
2.3.4 Replacement of tension arm assembly 2-11
2.3.5 Replacement of pinch roller arm assembly 2-13
2.3.6 Replacement of capstan motor 2-14
2.3.7 Replacement of reel motor assembly 2-15
2.3.8 Replacement of mode motor 2-16
2.3.9 Replacement of reel brake assembly 2-17
2.3.10 Replacement of take-up pole base assembly and take-up loading gear 2-18
2.3.11 Replacement of supply pole base assembly and supply loading gear 2-22
2.3.12 Replacement of take-up roller and take-up tape scraper 2-26
2.4 MECHANISM ASSEMBLING POSITION 2-27
2.4.1 Assembling position 2-27
2.4.2 Adjustment of pinch roller solenoid position 2-30
2.4.3 Adjustment of tension sensor position 2-31
2.5 PRESET OF TRACKING VR 2-32
2.6 AUTOMATIC ADJUSTMENT OF FG DRTY OF CAPSTAN, REEL AND DRUM MOTORS 2-32
2.7 ADJUSTMENT OF REEL SERVO CIRCUIT 2-33
2.7.1 Adjustment of tension sensor 2-33
2.7.2 Adjustment of torque 2-34
2.8 ADJUSTMENT OF A/C HEAD 2-37
2.8.1 Coars adjustment 2-37
2.8.2 Adjustment of X-value 2-39
2.8.3 Adjustment of azimuth 2-40
2.9 ADJUSTMENT OF TAPE TRANSPORT SYSTEM 2-43
2.9.1 Check of tape transport system 2-43
2.9.2 Adjustment of tape travel in search mode (with tape end) 2-44
2.9.3 Adjustment of tape travel in search mode (with tape beginning) 2-47
2.9.4 Adjustment of take-up roller 2-49
2.10 ADJUSTMENT OF INTERCHANGEABILITY 2-50
2.10.1 Adjustment of linearity 2-50

SECTION 2
MECHANISM ADJUSTMENT

2.1 GENERAL DESCRIPTION

2.1.1 Precautions

1. When using a soldering iron, make sure to disconnect the power cord of the set from the mains outlet beforehand.
2. When disconnecting a connector from the other, don't pull the connector cable but do it by the connector body without fail.
3. Don't disturb any adjustment part or adjusting VR with a trouble of unknown origin.
4. Don't insert a cassette tape into the set as it is abnormally placed such as laid on its side or top, otherwise the cassette housing may be damaged by insertion of cassette.
5. Through the mechanism adjustment, leave the set as its top cover and side covers are removed.
6. **When replacing rollers, make sure to do it one after another and to check the tape transport system every time a roller is replaced.**

2.1.2 General tools necessary for mechanism adjustment

- Nut wrench (5.5 mm)
- Taper nut driver (PUJ50637)
- Clearance gauge (0.1 mm)(PRD40300)
- Hex wrenches (0.9 mm, 1.27 mm, 2 mm)
- Phillips (+) screwdrivers (4 mm, 2.6 mm, 2 mm)
- Flat (-) screwdrivers
- Small screwdrivers
- Torque driver
- VHS Tape (T120)
- DIGITAL S Tape (DS104)

2.1.3 Special tools for mechanism adjustment

Alignment tape MHP, MBA-3, MSHP, MSHP-X	Cassette torque meter PUJ42881, PUJ42881B (containing VHS tape)	Parallel check plate	Height gauge PGJ04032
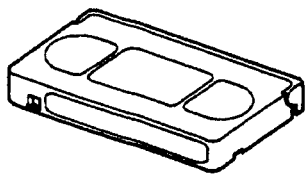	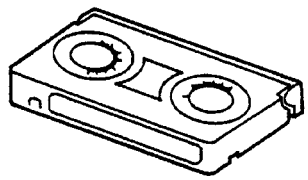	PGJ04035 (0.05mm) PUJ50204 (0.1mm) PGJ04039 (0.15mm) 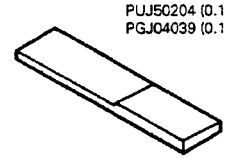 (Use the flat part only.)	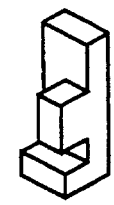
Line head wrench PGJ04033	**Hexagon-headed screwdriver** PGJ04034 (2mm)	**Take-up tape scraper fitting tool** KL40109	**A/C head inclination adjusting tool** PGJ40767-2
(See Note.) 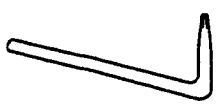	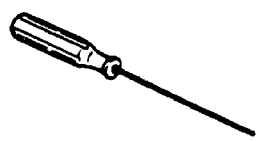	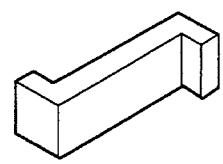	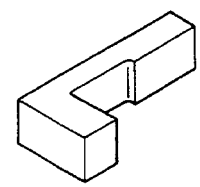

Note: Prepare two line head wrenches and bend one of them inwards at an angle of 15° approximately.

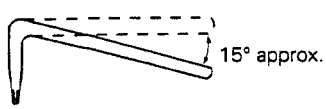

2.1.4 Test instrument necessary for mechanism adjustment

Measuring instruments	Requirement	Measuring instrument	Requirement
Oscilloscope	Capable of measuring 100 MHz and higher frequency band, moreover, it is exactly calibrated.	Audio Tester	It is exactry calibrated.

2.1.5 Specifications of alignment tape

· MHP

Vdio signal	Audio signal	Application	Remark
VHS (SP mode) Stairstep	7kHz	For adjustment of A/C head azimuth.	

· MBA-3

Vdio signal	Audio signal	Application	· Remark
–	1kHz (Guard band recording)	For adjustment of A/C head height.	Tape that MHA-3 is changed just in the name.

· MSHP

Vdio signal	Audio signal	Time	Application
Sine wave	–	50 min	For adjustment of interchange ability (linearity)

· MSHP-X

Vdio signal	Audio signal	Time	Application
Color bar	–	50 min	For adjustment of x-value and tracking preset

2.2 STANDARD OF MAIN PARTS REPLACEMENT

Periodical inspection and maintenance are the prerequisite for ensuring the original performance and reliability of the set. Table 2-2-1 (check and maintenance table for major parts) is compiled as a standard of main parts replacement on the assumption that the set is used in ordinary conditions. Therefore, replacing periods indicated in the table greatly differ depending on actual use and environmental conditions. Moreover, if the set undergoes inspection and maintenance irregularly or is left without inspection and maintenance, it not only shortens the replacement period considerably but also affects other parts and the whole function.

Rubber parts require careful attention because they are apt to deform or deteriorate if the set is hardly used and kept in a good condition.

The service life of the drum depends on use and environmental conditions.

2.2.1 Location of main parts

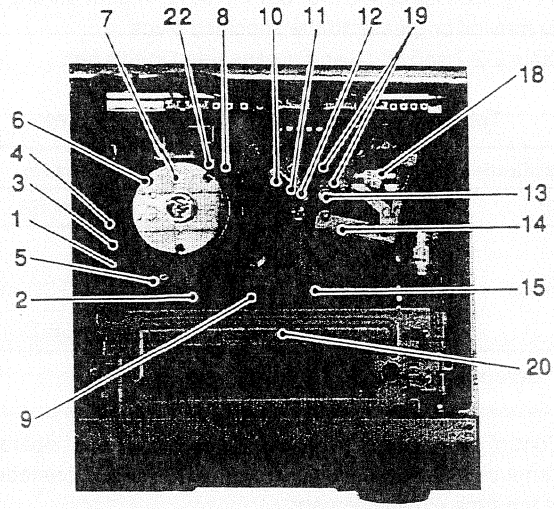

Fig. 2-2-1 Upper side of deck section

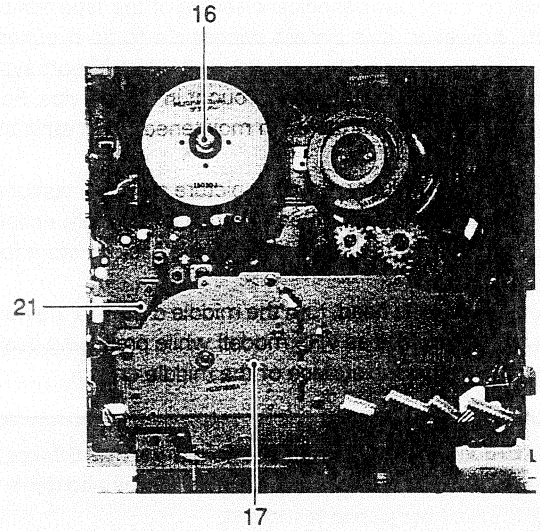

Fig. 2-2-2 Back side of deck section

2.2.2 Check and maintenance table

Table 2-2-1 Check and maintenance table for major parts

★ : Cleaning ○ : Replacing if required Cleaning if it is not replaced ● : Replacing

Classification	No.	Part Name	Reference section of this manual	Standard service period*					Symbol No. of part and page which it appears in	Remark
				H	A	B	C	D		
Tape transport system	1	Supply roller 1	2.9.2	★	○	●			No. 20, p. 5-11	
	2	Tension arm assembly	2.3.4						No. 26, p. 5-11	
	3	Supply roller 2	2.9.2						No. 21, p. 5-11	
	4	Full erase head assembly	—						No. 22, p. 5-11	Including supply take scraper
	5	Supply pole base assembly	2.3.11						No. 4, p. 5-11	
	6	Supply impedance roller	—	●					—	Including Drum assembly
	7	Drum assembly	2.3.2						No. 17, p. 5-5	
	8	Take-up impedance roller	—						—	Including Drum assembly
	9	Take-up pole base assembly	2.3.10	★	○	●			No. 7B, p. 5-11	
	10	A/C head	2.3.3						No. 8, p. 5-11	Excluding A/C HEAD board
	11	Take-up tape scraper	2.3.12	★					No. 13, p. 5-11	
	12	Take-up roller	2.3.12	★	○	●			No. 12, p. 5-11	
	13	Capstan shaft	—	★				●	—	
	14	Pinch roller arm assembly	2.3.5	○	●				No. 53, p. 5-11	
	15	Take-up guide arm roller assembly	2.9.2						No. 25, p. 5-11	
Drive system	16	Capstan motor	2.3.6					●	No. 1, p. 5-13	
	17	Reel motor	2.3.7						No. 2, p. 5-13	
	18	Mode motor	2.3.8						No. 44, p. 5-11	
	19	Loading belts	—	★	●				No. 41, p. 5-11 No. 51, p. 5-11	Motor side Worm gear side
	20	Cassette housing	2.3.1					●	M8, p. 5-14	
	21	Reel brake	2.3.9		●				No. 10, p. 5-13	
Others	22	Head cleaner	2.3.2	●					No. 11, p. 5-5	Excluded from drum assembly
	–	Swithing regulator assembly	1.3.6			●			No. 8, p. 5-6	
	–	Rotary encoder	2.4.1				●		No. 59, p. 5-11	

*** For fixing an aim to service, follow the indication of the DRUM HOUR METER appearing on the MENU scene in general. H: every 750 hours, A: every 1500 hours, B: every 3000 hours, C: every 4500 hours, D: every 6000 hours**

2.2.3 Cleaning

It is desirable to carry out periodical cleaning of the tape transport system, however, it is almost impossible to do it during actual use of the set. Therefore, clean the tape transport system without fail whenever the set is brought in for service. For cleaning, use fine woven cotton cloth moistened with ethyl alcohol.

1. If the head is dirty or dusty, playback picture may consist of a great deal of minute square blocks because of malfunction of error correction, or the set fails in playing back picture for the worst.
   For cleaning the video head, turn the middle drum in the normal direction (the same as VHS model) while pressing quality paper lightly onto the surface of the middle drum.

   Note:
   Since the video head is weak against vertical force (applied in up-down direction), it may easily be damaged if cleaning paper is moved.

2. Dirty and dusty tape guide not only increases dirt on the video head but also damages tape.
   If dust and foreign particles have collected on and around guide rollers, it may possibly cause abnormal roller rotation and may result in deterioration in picture quality as mentioned above.

2.2.4 Oiling and greasing

If oil or grease looks worn or deteriorated, wipe it off and then apply new oil or grease to the specified place.

1. Table 2-2-2 shows oil and grease used in this set.

Table 2-2-2 Oil and grease used in this set

Classification	Name	Part No.
Oil*	Cosmo Hydro HV56	COSMO-HV56
Grease	Moriton Grease (Black)	MOS2-C
	Fuloil G-31KAV (Light blue)	KANTO-G-31KAV
	Fuloil GB-TS-1 (Ocher)	KANTO-GB-TS-1

* General spindle oil (low viscosity) is substitutable.

2. Control cam needs greasing every 1500 hours of operation.
3. Other parts need greasing every 3000 hours of operation or at the time of replacement.
4. For parts that need oiling or greasing, refer to the exploded view of SECTION 5 EXPLODED VIEWS AND PARTS LIST.

No.	Item	Reference picture/drawing	Procedure

2.3 REPLACEMENT OF MAIN PARTS

2.3.1 Replacement of cassette housing assembly

1	Removing	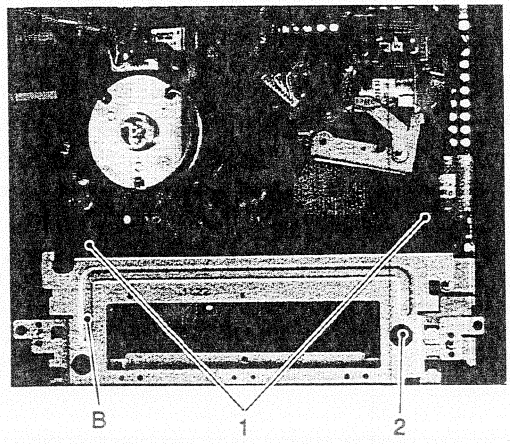	1) Remove the front panel assembly. (Refer to 1.1.3.) 2) Remove two screws 1 and one screw 2. 3) Press the cassette housing toward the drum to disengage it from the hook C. In this condition, raise the cassette housing up and disconnect the connector A of the HOUSING board. Then, remove the cassette housing B from the set.

Fig. 2-3-1 Removing cassette housing assembly (A)

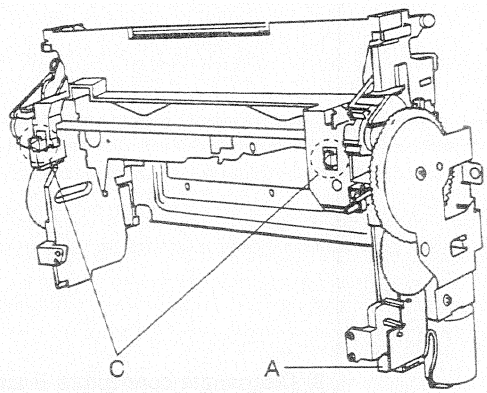

Fig. 2-3-2 Removing cassette housing assembly (B)

2	Installing		4) When reassembling the cassette housing to the set, do it in the reverse order of removing with one exception. That is to say, connect the connector A prior to fitting the cassette housing.

No.	Item	Reference picture/drawing	Procedure

2.3.2 Replacement of drum assembly

1	Removing	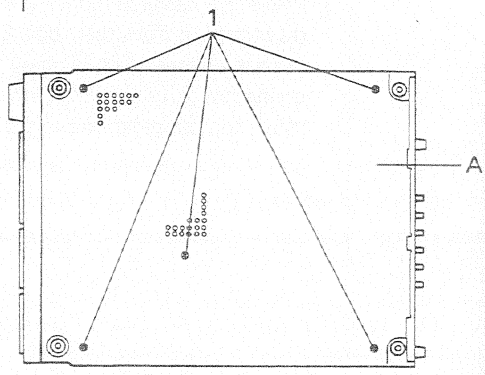 Fig. 2-3-3	1) Remove five screws 1 first and then remove the bottom cover A. (Fig. 2-3-3)
		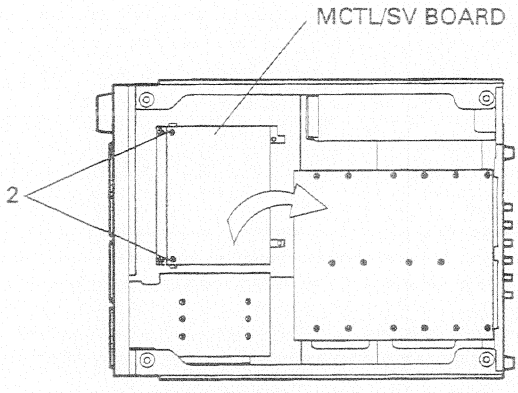 Fig. 2-3-4	2) Remove two screws 2 and fold out the MCTL/SV board. (Fig. 2-3-4)
		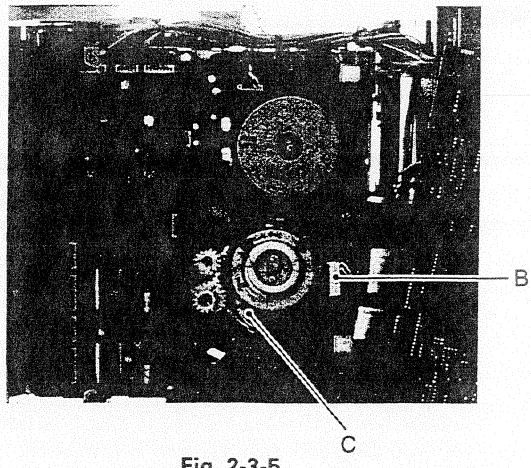 Fig. 2-3-5	3) Disconnect connectors B and C from the drum assembly. (Fig. 2-3-5)

No.	Item	Reference picture/drawing	Procedure

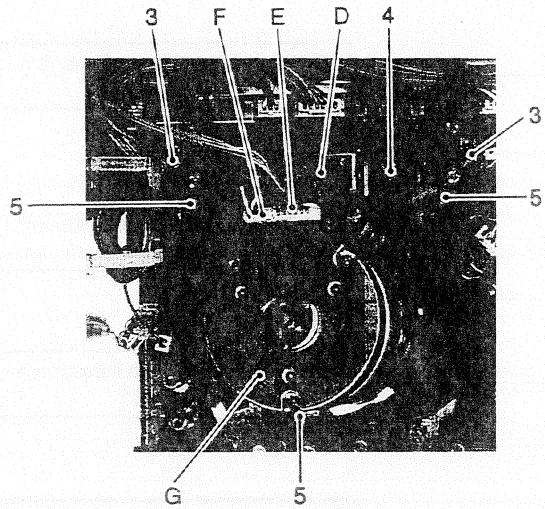

Fig. 2-3-6

4) Remove two screws 3 and do the REC ITI board. (Fig. 2-3-6)
5) Remove one screw 4 and do the head cleaner assembly D. (Fig. 2-3-6)
6) Disconnect connectors E and F from the drum assembly. (Fig. 2-3-6)

Note:
For disconnecting/connecting the connectors E and F, carefully do it not to apply any force to the drum.

7) Remove three screws 3 and do the drum assembly G. (Fig. 2-3-6)
8) For installing a new drum assembly to the set, perform reassembling parts in the reverse order of removing. At that time, tighten the screws 5 with a torque of 0.49 N/m (5 kgf/cm).
9) When the drum assembly is replaced, perform check and adjustment according to the following flowchart.

Check and adjustment flowchart after drum replacement

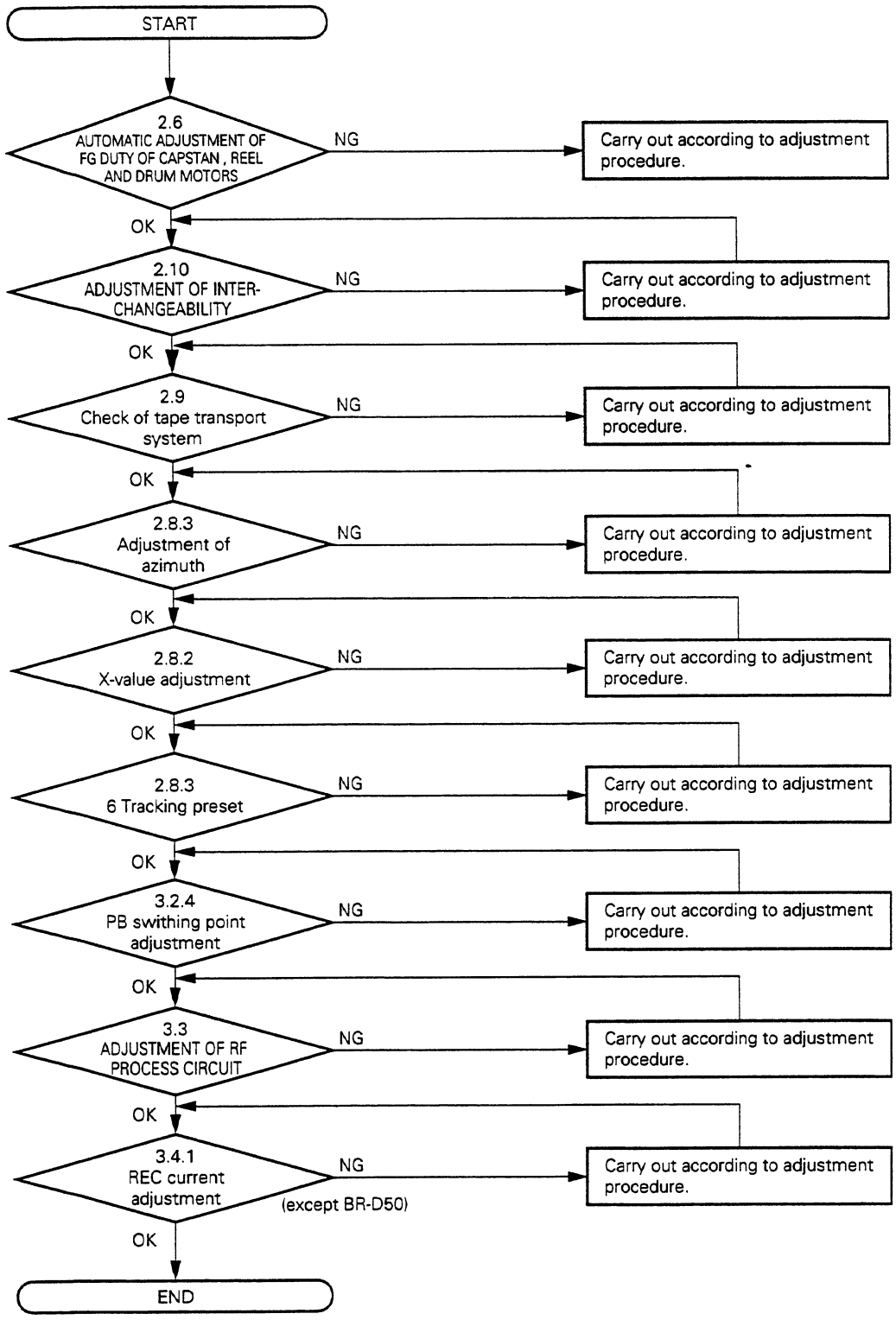

No.	Item	Reference picture/drawing	Procedure

2.3.3 Replacement of AC head

1	Removing	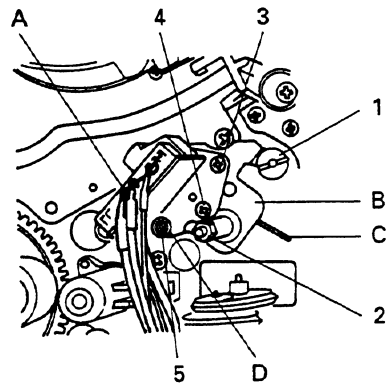 **Fig. 2-3-7**	1) Disconnect the connector A of the A/C HEAD board. 2) Remove a taper nut 1. 3) Remove a nut 2. 4) Remove the A/C head together with the head base with careful attention to the spring under the head base B. 5) After remove the screws 3, 4 and 5, remove the A/C head from the head base with careful attention to the spring D not to lose it. 6) Unsolder the A/C HEAD board and replace the A/C head.
2	Installing	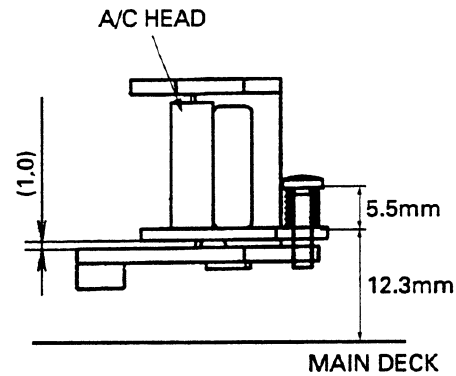 **Fig. 2-3-8** 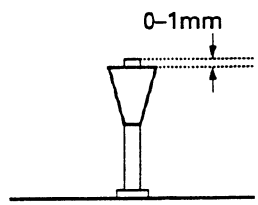 **Fig. 2-3-9**	1) When mounting a new A/C head on the head base, roughly adjust the height of screw 5 as indicated by Fig. 2-3-8. Moreover, set the A/C head in parallel with the head base by adjusting screws. 2) Reassemble the A/C head with the head base to the set in the reverse order of removing. At that time, adjust the clearance between the head base and the main deck with the nut 2 as specified by the Fig. 2-3-8. 3) Temporarily adjust the height of the taper nut 1 as shown by Fig. 2-3-9.

No.	Item	Reference picture/drawing	Procedure
3	Check and adjustment		**Note:** **For tape travel check prior to adjustment, don't use an alignment tape but use a general recording tape because the tape may be damaged before adjustment.** 1) Adjust the A/C head (refer to 2.8). 2) Check the tape transport system (refer to 2.9), and adjust it if the occasion arises. 3) Check the X-value (refer to 2.8.2), and adjust it if the occasion arises. 4) Check the linearity (refer to 2.10.1), and adjust it if the occasion arises.

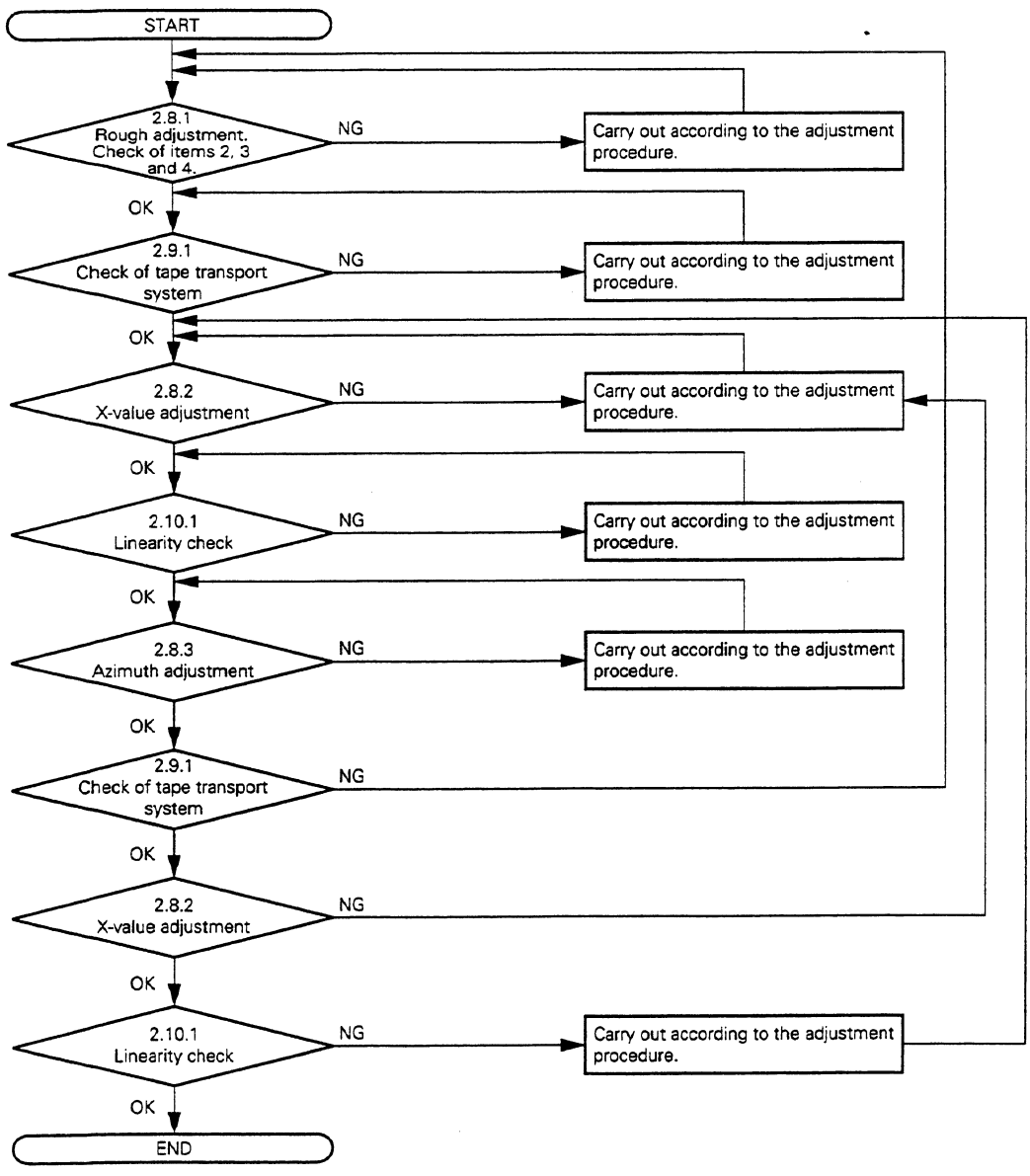

No.	Item	Reference picture/drawing	Procedure

2.3.4 Replacement of tension arm assembly

Note: • Before replacing the tension srm assembly, make sure to check the set for "2.7 ADJUSTMENT OF REEL SERVO CIRCUIT" and to adjust anything abnormal, if it is.
• After replacement of the tension armassembly, proceed to the following item "3. Adjustment of tension spring" mentioned on the next page without fail.

1	Removing	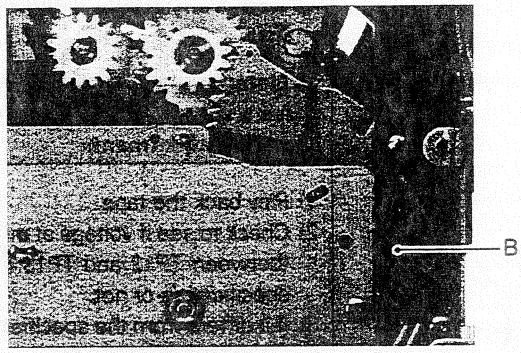 Fig. 2-3-10	1) Remove the cassette housing assembly. (Refer to 2.3.1.) 2) After removing five screws 5, remove the bottom cover A. (Refer to Fig. 2-3-3.) 3) Remove two screws 2 and fold out the MCTL-SV board. (Refer to Fig. 2-3-4.) 4) Remove the REEL MDA board. 5) Remove a slit washer B. (Refer to Fig. 2-3-10.)
		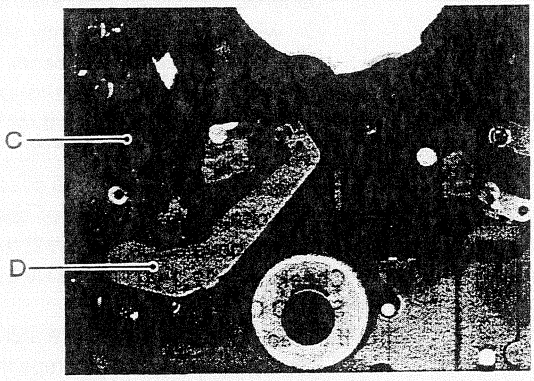 Fig. 2-3-11	6) After removing a spring C that is engaged between the tension arm assembly and the spring adjust assembly, remove the tension arm assembly D while raising it up. (Refer to Fig. 2-3-11.)
2	Installing		1) Install a new tension arm assembly in the reverse order of removing. **Note:** **When installing a new tension arm assembly, make sure to replace the slit washer B with new one, too. See the symbol No. W9 on page 5-11.** 2) Adjust the reel servo circuit (refer to 2.7). 3) Adjust the tape transport system (refer to 2.9). 4) Proceed to the tension spring adjustment. (Refer to the following page.)

No.	Item	Measuring instruments & Input signals	Mode	Measuring point (◎) Adjustment parts (ⓣ) Adjustment level (☆)	Adjustment procedure
3	Adjustment of tension spring	Digital voltmeter	TEST mode 65 88 00 00	◎Between TP12 [MCTL/SV] and TP13 [MCTL/SV] ☆1.85 ± 0.1 V	**This model generally need not this adjustment, however, the following adjustment must be performed after the tension arm or tension spring is replaced.** **When the tension arm or tension spring needs to replace, make sure to check the set for "2.7 ADJUSTMENT OF REEL SERVO CIRCUIT" and to adjust anything abnormal before replacement.** **Note:** **Use a some signal recorded tape (DS-104) for this adjustment.** 1) Play back the tape. 2) Check to see if voltage at the measuring point (between TP12 and TP13 [GND]) meets the specification or not. 3) If it differs from the specified voltage, remove the tape from the set. 4) Loosen the screw 1. 5) When the voltage is higher than the standard, slightly slide the spring plate A toward the rear panel with a precision screwdriver or the like. Or, when it is lower, slightly slide the spring plate A toward the front panel. Make sure to tighten the screw 1 after this job. 6) Make sure to adjust the set for "2.7 ADJUSTMENT OF REEL SERVO CIRCUIT". 7) Play back the tape again to check the voltage. 8) If the voltage is still out of specification, repeat the above steps from 2) through 7). 9) Cheek the "2.7 ADJUSTMENT OF REEL SERVO CIRCUIT" 10) If the adjustment levels are still out of specification, repeat the above steps from 2) through 8).

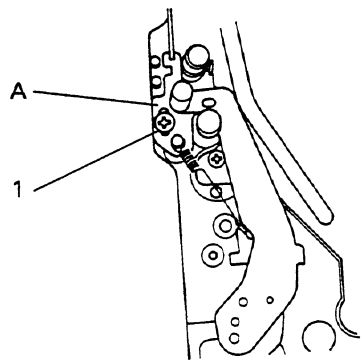

Fig. 2-3-12

No.	Item	Reference picture/drawing	Procedure

2.3.5 Replacement of pinch roller arm assembly

Note: For removing and installing pinch roller arm assembly, set the mechanism in the assembling position (refer to 2.4.1).

1	Removing	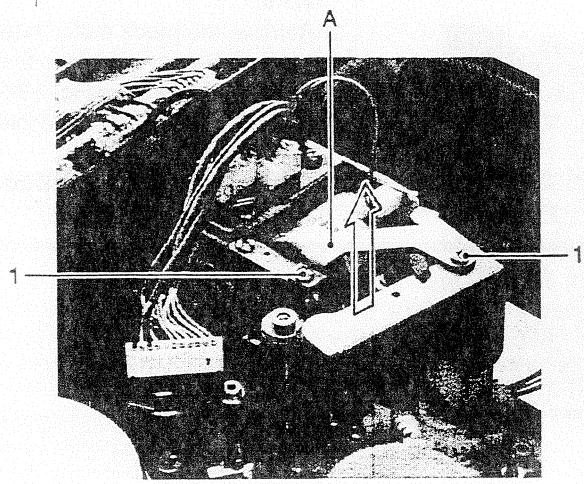 Fig. 2-3-13	1) After removing two screws 1, remove the pinch roller arm assembly while raising it up.
2	Installing	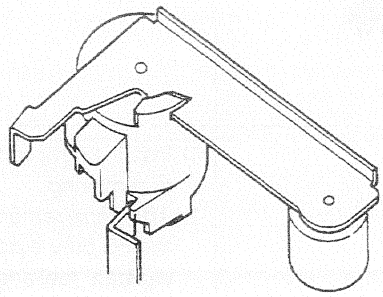 Fig. 2-3-14	1) Install a new pinch roller arm assembly so that the notch of its cam is put on the rail of the solenoid bracket.

No.	Item	Reference picture/drawing	Procedure

2.3.6 Replacement of capstan motor

Note: For removing and installing capstan motor, set the mechanism in the assembling position (refer to 2.4.1).

1	Removing	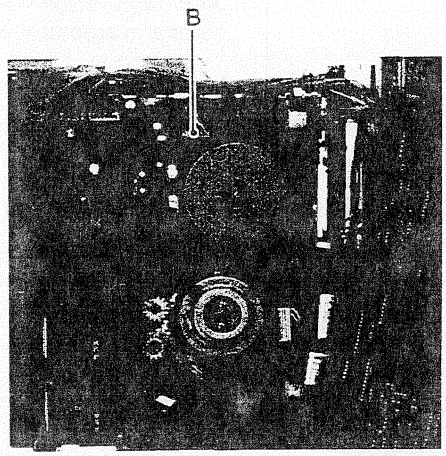 Fig. 2-3-15	1) Remove the pinch roller arm assembly (refer to 2.3.5). 2) Remove the mode motor (refer to 2.3.8). 3) Remove five screws 1 and then remove the bottom cover A (refer to Fig. 2-3-3). 4) Remove two screws 2 and fold out the MCTL/SV board (refer to Fig. 2-3-4). 5) Disconnect the connector B (back side of the main deck, refer to Fig. 2-3-15).
		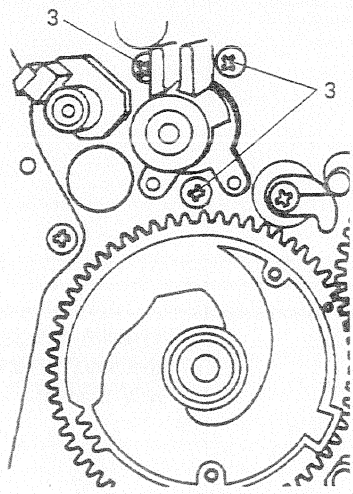 Fig. 2-3-16	6) Remove three screws 3, and the capstan motor can be removed (back side of the main deck, refer to Fig. 2-3-16). Remove the capstan motor so as to pull it out of the back side of the main deck.
2	Installing		1) Install a new capstan motor in the reverse order of removing. 2) After replacement is completed, enter the set into the FG duty automatic adjustment mode for the capstan, reel and drum motors (refer to 2.6).

No.	Item	Reference picture/drawing	Procedure

2.3.7 Replacement of reel motor assembly

1	Removing	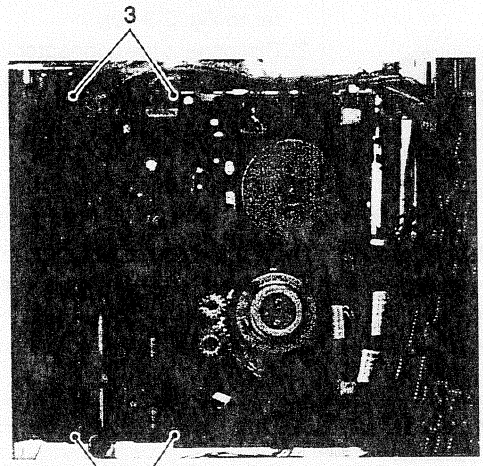 Fig. 2-3-17	1) Remove five screws 1 and then remove the bottom cover A (refer to Fig. 2-3-3). 2) Remove two screws 2 and fold out the MCTL/SV board (refer to Fig. 2-3-4). 3) Remove four screws 3 and remove the REEL MDA board (refer to Fig. 2-3-17). 4) Turn the mode motor counterclockwise (toward the rear side) by hand to enter the mechanism into the loading end status.
		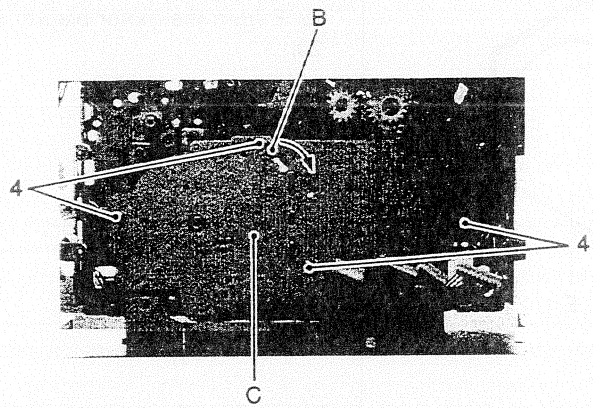 Fig. 2-3-18	5) Change the position of the sensor LED's lock pin B to the mechanism assembling position (refer to Fig. 2-3-18). 6) Remove four screws 4 and remove the reel motor assembly C.
2	Installing		1) Set the sensor LED's lock pin of a new reel motor assembly in the mechanism assembling position (refer to Fig. 2-3-18). 2) Install the new reel motor assembly in the reverse order of removing. During this assembling, pay careful attention to the reel brake assembly not to get touched by the reel motor assembly. 3) Set the sensor LED's lock pin into the operation position. 4) Turn the mode motor clockwise (toward the front side) by hand to enter the mechanism into the unloading end status. 5) Enter the set into the FG duty automatic adjustment mode (refer to 2.6) for the capstan, reel and drum motors. 6) Check up on the adjustment items for the reel servo circuit (refer to 2.7). If there is something in need of adjustment, carry it out according to the adjustment procedure.

No.	Item	Reference picture/drawing	Procedure

2.3.8 Replacement of mode motor

1	Removing	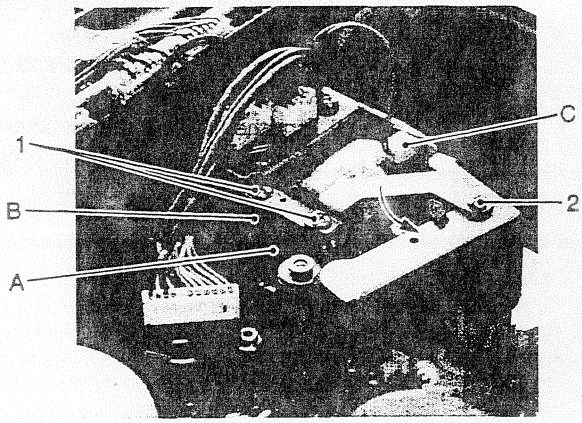 Fig. 2-3-19	1) Disengage the belt B from the motor pulley A (refer to Fig. 2-3-19). 2) Disconnect the connector C (refer to Fig. 2-3-19). 3) Remove two screws 1 and loosen a screw 2. 4) Remove the mode motor E together with the motor bracket D.
		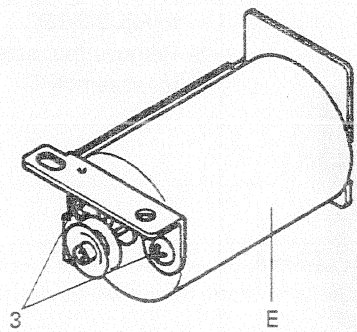 Fig. 2-3-20	5) Remove two screws 3 and detach the mode motor E from the motor bracket (refer to Fig. 2-3-20).
2	Installing		1) Install a new mode motor in the reverse order of removing.

No.	Item	Reference picture/drawing	Procedure

2.3.9 Replacement of reel brake assembly

1	Removing	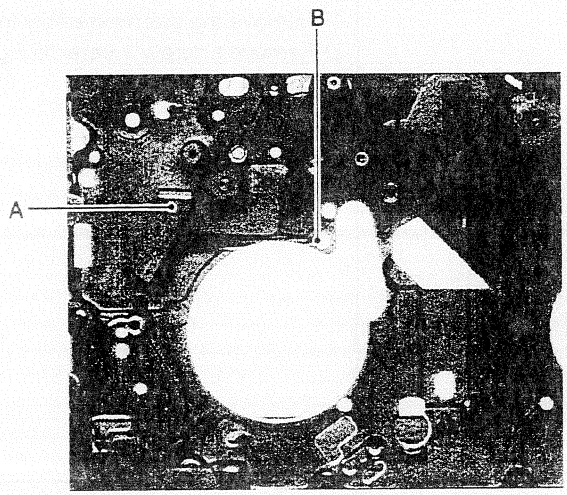 Fig. 3-3-21	1) Remove the reel motor assembly (refer to 2.3.7). 2) Remove the slit washer A, and disengage the tension spring at the point B (refer to Fig. 2-3-21). 3) Remove the reel brake assembly while raising it up.
2	Installing		1) Install a new reel brake assembly in the reverse order of removing. **Note:** **When installing a new reel brake assembly, make sure to replace the slit washer A with new one, too.** **See the symbol No. W2 on page 5-13.**

No.	Item	Reference picture/drawing	Procedure

2.3.10 Replacement of take-up pole base assembly and take-up loading gear

Note: When replacing the take-up pole base assembly and take-up loading gear, make sure to do it in the condition that the pole base assembly and loading gear assembly of the supply side are normally set. For replacing those parts of both the take-up and supply sides at the same time, this service manual gives no mention about it.

1	Removing take-up pole base assembly	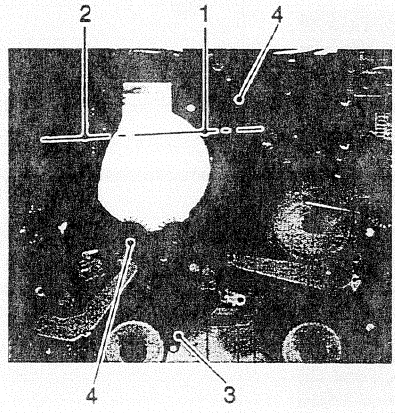 Fig. 2-3-22	1) Remove the drum assembly (refer to 2.3.2). 2) Remove a screw 1 (refer to Fig. 2-3-22).
		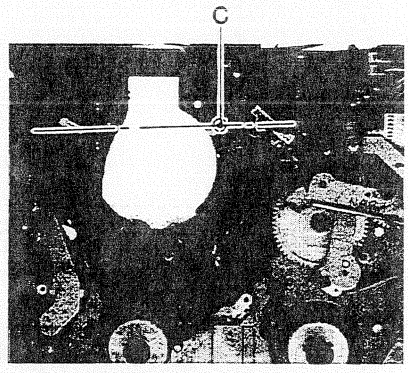 Fig. 2-3-23	3) Turn the mode motor counterclockwise (toward the rear side) by hand until the slant pole A of the take-up pole base assembly is positioned on a straight line connecting the center of the tapped hole for the screw 1 that has been removed in the above step 2) and the center of the tapped hole for the screw 2 with each other. (Refer to Fig. 2-3-23.) 4) Set the sensor LED's lock pin in the assembling position (refer to Fig. 2-3-18). 5) Remove one screw 3 and two screws 4. Then remove the take-up loading assembly B.
		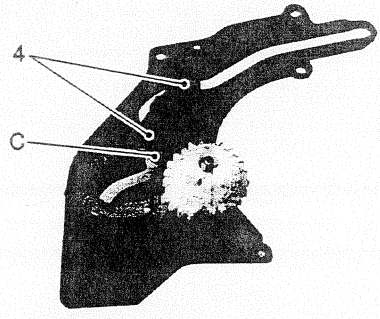 Fig. 2-3-24	6) Remove two screws 4 and remove the take-up pole base assembly C (refer to Fig. 2-3-24).

No.	Item	Reference picture/drawing	Procedure
2	Removing take-up loading gear	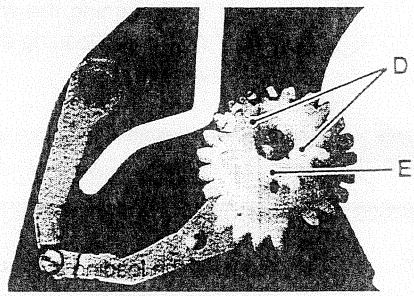 Fig. 2-3-25	7) Remove the take-up loading assembly (refer to 2.3.10, item 1, steps 1 to 4). 8) While pressing two pawls D retaining the loading gear E slightly inwards, remove the loading gear E.
3	Removing take-up loading gear spring stay	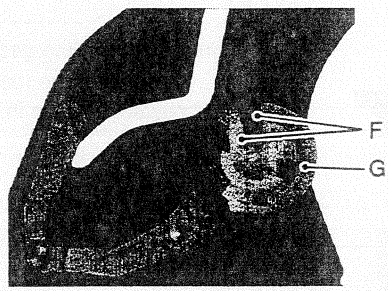 Fig. 2-3-26 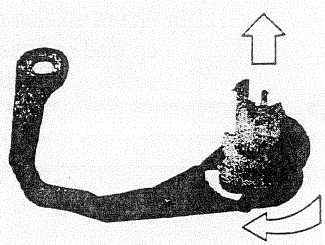 Fig. 2-3-27	9) Remove the take-up loading gear (refer to 2.3.10, item 1, steps 1 to 8). 10) While extending two pawls of the spring stay G outwards, pull them out upwards. 11) While turning the spring stay G clockwise, pull it out upwards (refer to Fig. 2-3-26). At that time, pay careful attention to the tension spring (T) H between the spring stay and take-up loading assembly not to lose it.

No.	Item	Reference picture/drawing	Procedure
4	Installing take-up loading gear spring stay	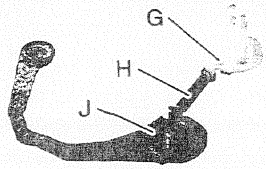 Fig. 2-3-28 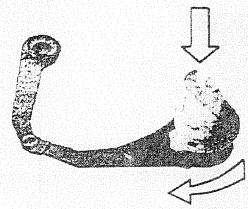 Fig. 2-3-29 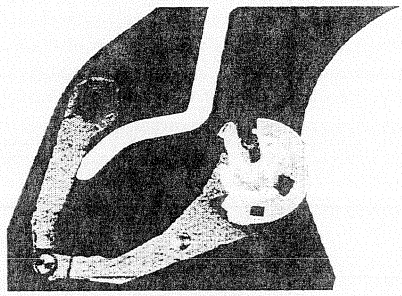 Fig. 2-3-30	1) Engage the tension spring (T) H with the spring stay G and loading arm assembly J (refer to Fig. 2-3-28). 2) While turning the spring stay counterclockwise, fit it to the loading arm assembly (refer to Fig. 2-3-29). 3) Fit the loading arm assembly into the guide rail.
5	Installing take-up loading gear	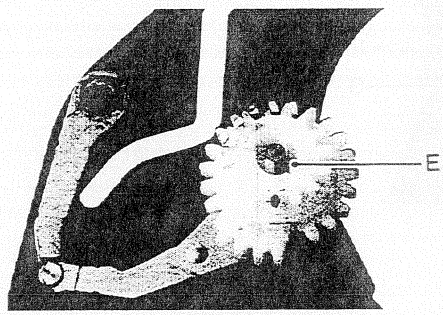 Fig. 2-3-31	4) Fit the loading gear E to the loading arm assembly so that the loading gear is set in the relative position shown in Fig. 2-3-31.
6	Installing take-up pole base assembly	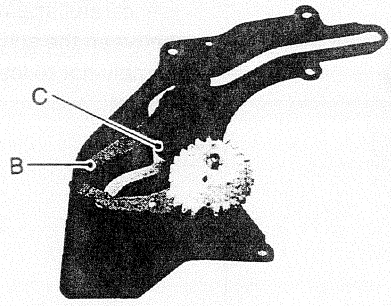 Fig. 2-3-32	5) Fit the take-up pole base assembly C to the take-up loading assembly B. At that time, tighten the screw with a torque of 0.34 N/m (3.5 kgf/cm).

No.	Item	Reference picture/drawing	Procedure
7	Installing take-up loading assembly	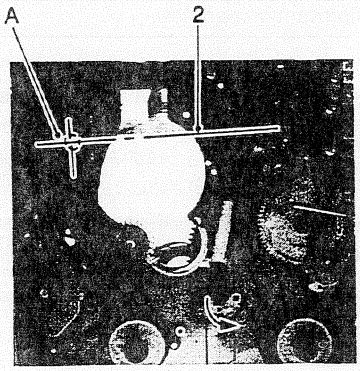 Fig. 2-3-33	6) Set the sensor LED's lock pin in the assembling position (refer to Fig. 2-3-18). 7) Turn the mode motor by hand so that the slant pole A of the supply pole base assembly is positioned on a straight line connecting the tapped hole for the screw 1 and the fitting hole of the take-up loading assembly with each other.
		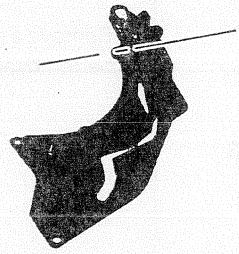 Fig. 2-3-34	8) Shift the slant pole B of the take-up loading assembly to a point nearby the fitting hole 3 (refer to Fig. 2-3-34).
		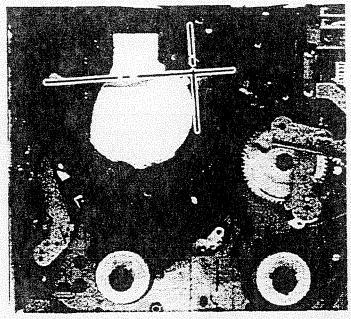 Fig. 2-3-35	9) In the condition of the step 2) mentioned above, fit the take-up loading assembly to the main deck C. At that time, make sure that the slant pole A of the supply pole base assembly, screw 1, take-up loading assembly fitting hole, slant pole of take-up pole base are aligned in a straight line as shown in Fig. 2-3-35. 10) Fit the take-up loading assembly B with the screws 3 and 4 (refer to Fig. 2-3-23).
		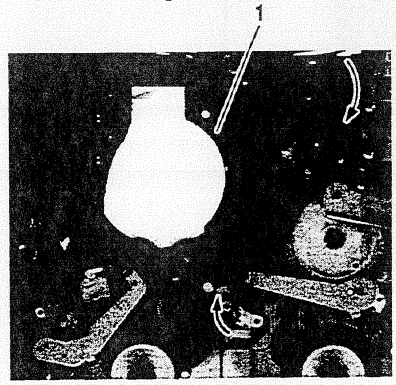 Fig. 2-3-36	11) Set the sensor LED's lock pin in the assembling position (refer to Fig. 2-3-18). 12) Turn the mode motor clockwise (toward the front side) by hand to enter the mechanism into the unloading end status (refer to Fig. 2-3-36). 13) Restore the drum assembly to the set. 14) Perform "2.9 Adjustment of tape transport system".

No.	Item	Reference picture/drawing	Procedure

2.3.11 Replacement of supply pole base assembly and supply loading gear

Note: When replacing the supply pole base assembly and supply loading gear, make sure to do it in the condition that the pole base assembly and loading gear assembly of the take-up side are normally set. For replacing those parts of both the take-up and supply sides at the same time, this service manual gives no mention about it.

1	Removing supply pole base assembly	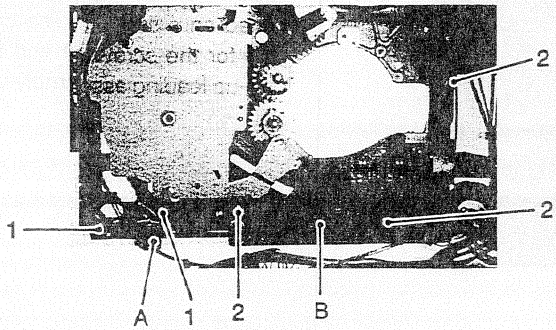 **Fig. 2-3-37** 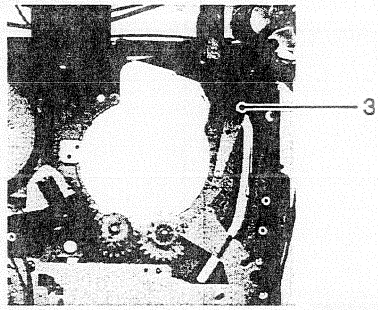 **Fig. 2-3-38**	1) Remove the drum assembly (refer to 2.3.2). 2) Turn the mode motor counterclockwise (toward the rear side) by hand until the mechanism reaches the loading end position. 3) After removing two screws 1, remove the board bracket A. 4) After removing three screws 2, remove the END SENSOR board B. 5) Remove a screw 3, and the supply pole base can be removed.
2	Removing supply loading gear	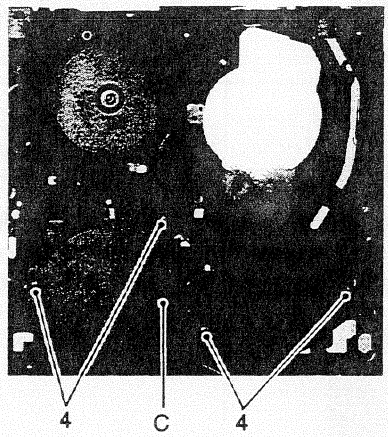 **Fig. 2-3-39**	6) Remove the supply pole base assembly (refer to 2.3.11, item 1, steps 1 to 5). 7) Remove four screws 4 and remove the reel motor assembly C.

No.	Item	Reference picture/drawing	Procedure
		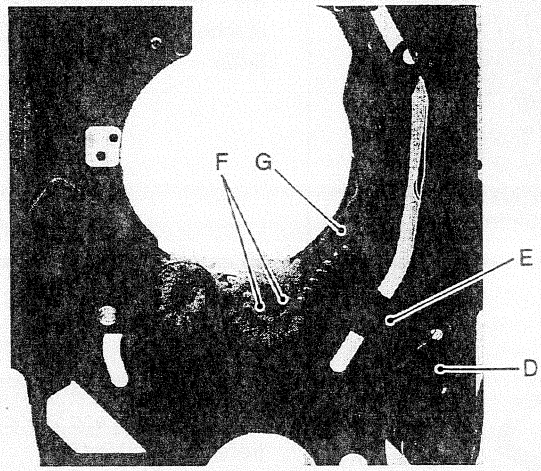 Fig. 2-3-40	8) Remove a slit washer D and then cancel lever E (refer to Fig. 2-3-40). 9) While pressing two pawls E retaining the loading arm assembly D slightly inwards, remove the loading arm assembly D (refer to Fig. 2-3-40).
		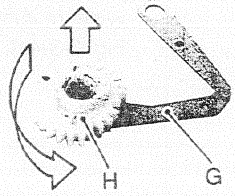 Fig. 2-3-41	10) While turning the supply loading gear F counterclockwise, pull it out upwards as shown in Fig. 2-3-41. At that time, pay careful attention to the tension spring (S) J between the supply loading gear and loading arm assembly not to lose it.

No.	Item	Reference picture/drawing	Procedure
3	Installing supply loading gear	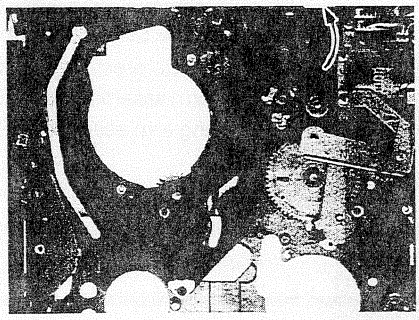 Fig. 2-3-42	1) Turn the mode motor counterclockwise (toward the rear side) by hand until the mechanism reaches the loading end position (refer to Fig. 2-3-42).
		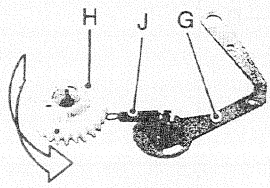 Fig. 2-3-43	2) Engage the tension spring (S) J with the supply loading gear H and the loading arm assembly G (refer to Fig. 2-3-43).
		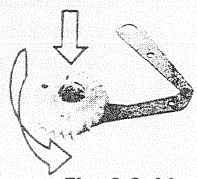 Fig. 2-3-44	3) While turning the loading gear H counterclockwise, fit it into the loading arm assembly (refer to Fig. 2-3-44).
		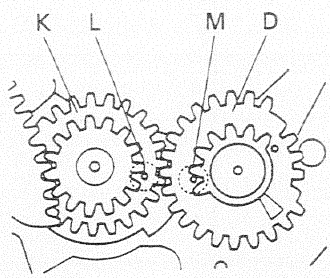 Fig. 2-3-45	4) Set the supply loading gear D so that the reference hole of the take-up loading gear K and that of the supply loading gear D are relatively positioned with each other as shown in Fig. 2-3-45. (Refer to Fig. 2-3-45).
		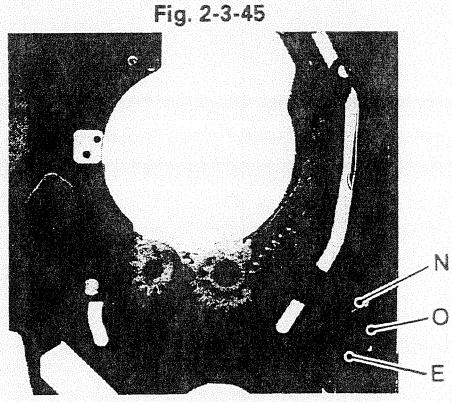 Fig. 2-3-46	5) Fit the cancel lever E and torsion spring N with the slit washer O. **Note:** **When installing a new supply loading gear, make sure to replace the slit washer O with new one, too.** **See the symbol No. W3 on page 5-13.**

No.	Item	Reference picture/drawing	Procedure
4	Installing supply pole base assembly	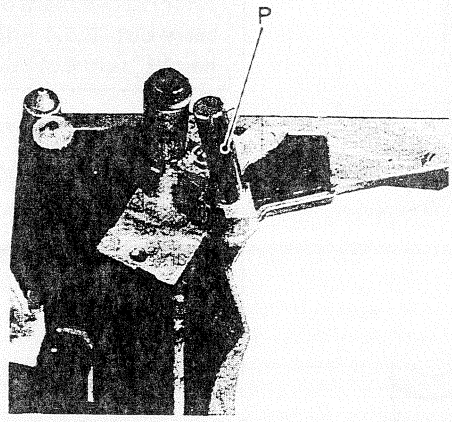 Fig. 2-3-47	6) Fit the supply pole base assembly P into the guide rail while setting the stopper of the pole base assembly in the insertion hole of the guide rail (refer to Fig. 2-3-47).
		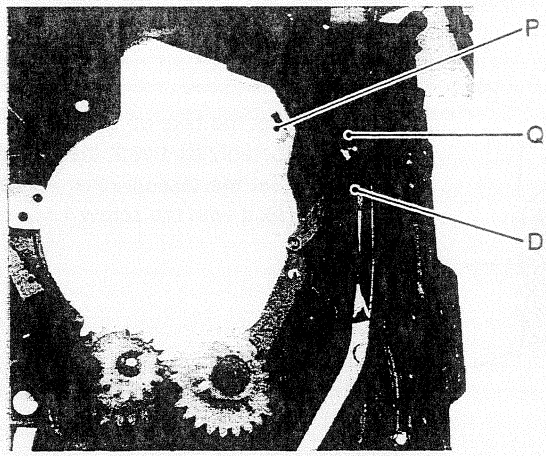 Fig. 2-3-48	7) Fit the arm D of the supply loading assembly and the pole base assembly P so that the collar Q is sandwiched between them (refer to Fig. 2-3-48). 8) Install the reel motor assembly in the mechanism. (Refer to Fig. 2-3-39.) 9) Restore the END SENSOR board K to the original position. (Refer to Fig. 2-3-37.) 10) Turn the mode motor clockwise (toward the front side) by hand until the mechanism reaches the unloading end position. 11) Restore the drum assembly to the mechanism. 12) Perform "2.9 Adjustment of tape transport system".

No.	Item	Reference picture/drawing	Procedure

2.3.12 Replacement of take-up roller and take-up tape scraper

1	Removing	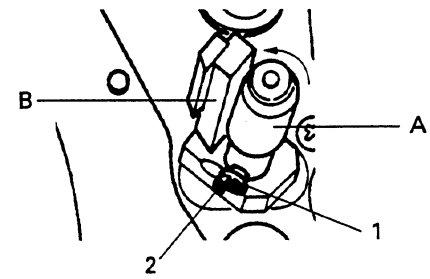 **Fig. 2-3-49** 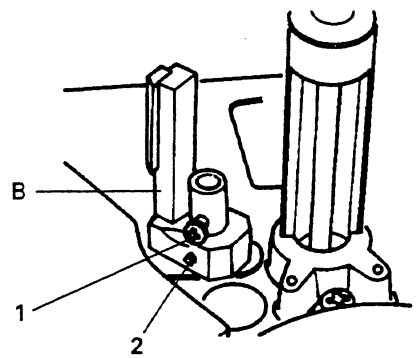 **Fig. 2-3-50**	**Note:** **After replacement of the take-up tape scraper, carry out "2.5.4 Adjustment of take-up roller height" without fail.** 1) Remove a screw 1 first, and then remove the take-up roller A while turning it counterclockwise (refer to Fig. 2-3-49). 2) Remove a screw 2, and the take-up tape scraper B can be removed together with the block (refer to Fig. 2-3-50).
2	Installing	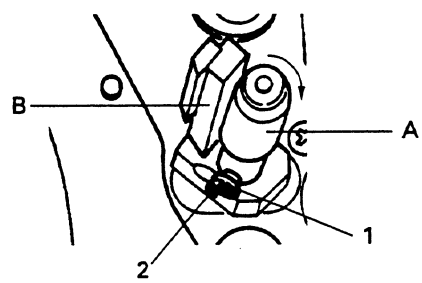 **Fig. 2-3-51** 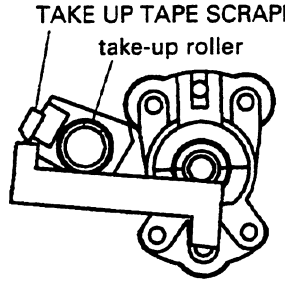 **Fig. 2-3-52**	3) Set the take-up tape scraper B in place and temporarily fix it with the screw 2. 4) Set the take-up roller A in place and temporarily fix it with the screw 1. 5) Adjust the setting position of the take-up tape scraper B with the take-up tape scraper fitting jig. After adjustment, tightly fix it with the screw 2. **Note:** Use the R-side of the jig for the BR-D80/D85 and its P-side for the BR-D50. 6) Carry out "2.9 Adjustment of tape transport system".

No.	Item	Reference picture/drawing	Procedure

2.4 MECHANISM ASSEMBLING POSITION

2.4.1 Assembling position

Note: The mechanism of this set has close relation to the mechacon circuit through the rotary encoder. In short, all operations of mechanism component parts and the mechanism as a whole are controlled by the rotational angle of the rotary encoder, or cam gear's rotational angle in other words. If any of those component parts is abnormally installed, it causes malfunction of the mechanism. When replacing or adjusting mechanism part, make sure to set the mechanism in the specified assembling position before proceeding to the service work.

1	Assembling position	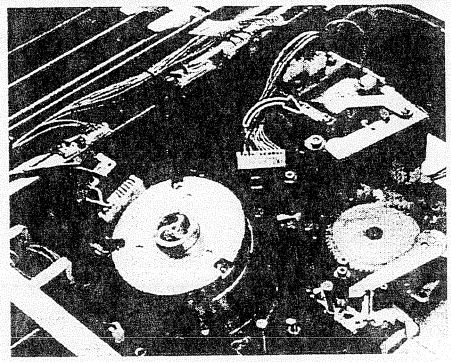 **Fig. 2-4-1** 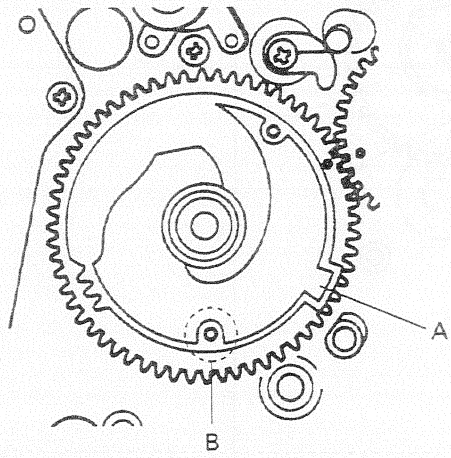 **Fig. 2-4-2**	1) Turn the mode motor clockwise (toward the front side) by hand until the pole base assembly reaches the unloading end position. (Refer to Fig. 2-4-1.) 2) Furthermore turn the mode motor clockwise (toward the front side) by hand until the hole B (refer to Fig. 2-4-2) in the control cam A overlaps the reference hole in the main deck as viewed from the top. (Refer to Fig. 2-4-2). 3) The mechanism status shown in Fig. 2-4-2 is called the mechanism assembling position.

No.	Item	Reference picture/drawing	Procedure
2	Assembling position of control cam	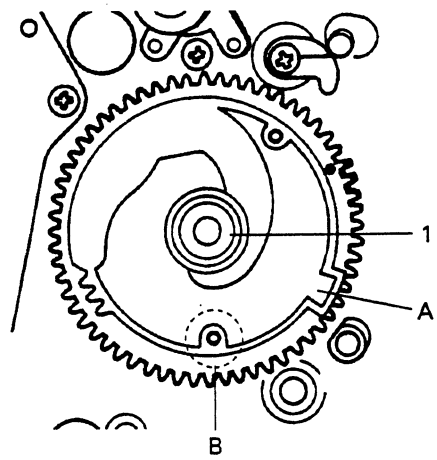 Fig. 2-4-3	1) Set the control cam with a slit washer in a position that the hole B in it overlaps the reference hole in the main deck as viewed from the top. 2) At that time, insert the arm gear's pin into the slit on the back of the control cam. 3) After this, lock the control cam until assembling mechanism will be complete by inserting a precision screwdriver or the like into the reference hole in the main deck through the hole B in the control cam.
3	Assembling position of pinch roller cam	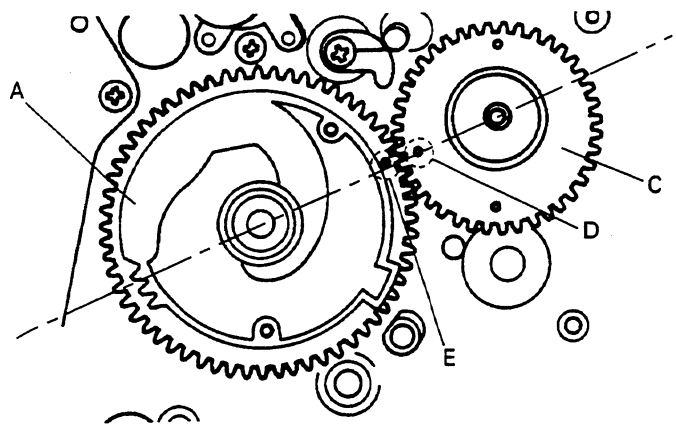 Fig. 2-4-4	4) Inset the control cam C so that the hole E in it and the hole D in the pinch roller cam are aligned in a straight line connecting the respective shafts of both the control cam A and pinch roller cam C with each other.
4	Assembling position of rotary encoder	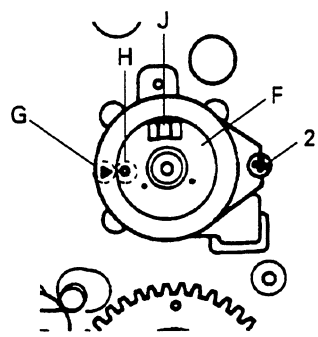 Fig. 2-4-5	5) Fit the rotary encoder F with the screw 2. 6) Set the rotary encoder's outer mark G and inner mark H to each other.

No.	Item	Reference picture/drawing	Procedure
5	Assembling position of cam gear	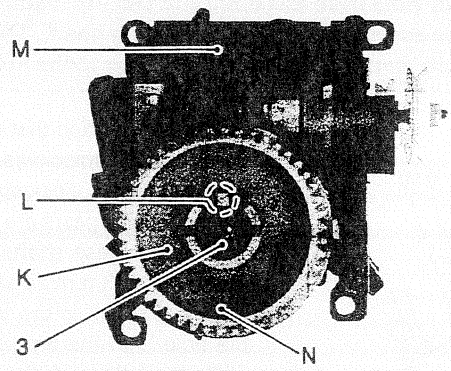 Fig. 2-4-6	7) Fit the cam gear K to the solenoid bracket M with the slit washer 3.
		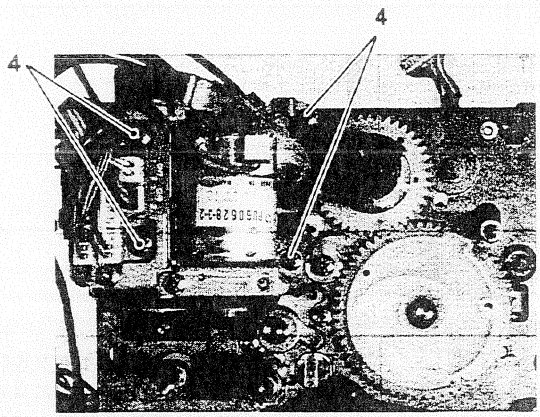 Fig. 2-4-7	8) Set the projection L of the cam gear K in the slit J of the rotary encoder F. 9) Fit the mode motor assembly Q with the screw 4.
		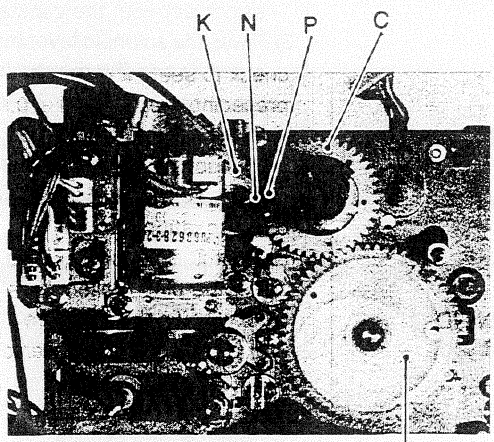 Fig. 2-4-8	**Reference:** When installing the mode motor assembly, make sure that the hole N in the cam gear and the hole P in the pinch roller cam are aligned in a straight line connecting the respective shafts of both the cam gear and pinch roller cam C with each other.

No.	Item	Reference picture/drawing	Procedure

6	Assembling position of take-up loading gear, supply loading gear, cancel lever and arm gear	**Note:** **For assembling the take-up loading gear, supply loading gear, cancel lever, refer to the manual of "2.3.10 Replacement of take-up pole base assembly and take-up loading gear" and "2.3.11 Replacement of supply pole base assembly and supply loading gear". The following is just a mention of positional relation between those gear and the lever in the mechanism assembly.** 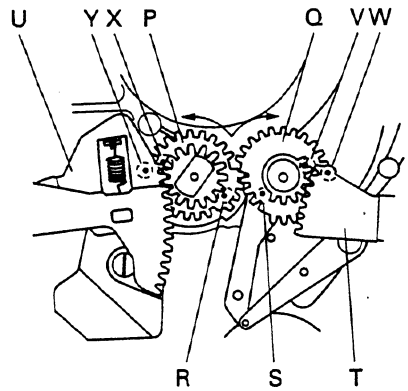 **Fig. 2-4-9**	1) On the assumption that the take-up loading gear P turns counterclockwise while the supply loading gear Q turns clockwise, two holes R and S in the respective gears are aligned in a straight line connecting those shafts with each other. (Actually, they don't turn as said above.) 2) If so, the hole X in the take-up loading gear and the hole U in the arm gear overlap each other while the hole V of the supply loading gear and the hole W of the cancel lever T overlap each other.

2.4.2 Adjustment of pinch roller solenoid position

1	Position adjustment	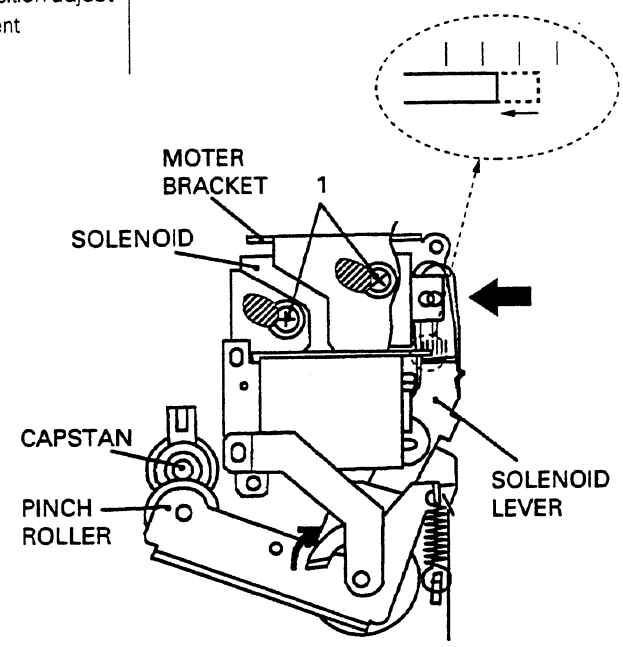 **Fig. 2-4-10**	1) Turn the mode motor in the loading direction (toward the rear side) by hand until the pinch roller goes down to the lowest position (just before it goes up toward the capstan shaft). 2) Press the solenoid lever in the direction of the arrow (◀) by hand so as to make the pinch roller contact with the capstan shaft. 3) Press the solenoid lever by hand furthermore, and check to see if it moved from the position of the preceding step 2) for 1 ± 0.5 graduation. 4) If the movement is less or more than 1 ± 0.5 graduation, loosen two screws 1 to adjust the position of the solenoid so that it moves for 1 ± 0.5 graduation. 5) Press the solenoid lever moreover to check to see if the pinch roller press lever minutely turns clockwise (in the direction of the arrow in the figure) after the pinch roller contacts the capstan shaft. 6) If the check result is satisfactory, lock the screws 1 with screw sealant.

No.	Item	Reference picture/drawing	Procedure

2.4.3 Adjustment of tension sensor position

1	Position adjustment	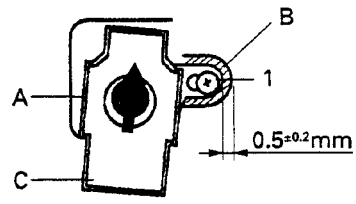 Fig. 2-4-11 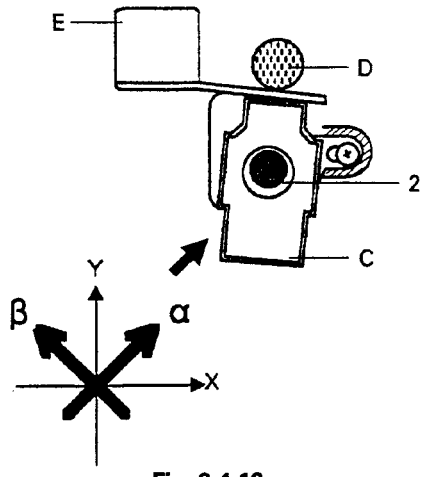 Fig. 2-4-12	**Note:** **If the position of the tension sensor is adjusted, it needs to adjust "tension bias", "tension gain", "back tension in play mode", "reverse (X1) torque" again after this adjustment.** 1) Turn off the power and remove the cassette housing assembly (refer to 2.3.1). 2) Turn the mode motor counterclockwise (toward the rear side) by hand to set the mechanism in the loading end position. 3) Loosen the screw 1 and adjust the position of the tension sensor base so that the tension sensor base A and the cut portion of the main deck (shaded portion B) are relatively positioned as shown in Fig. 2-4-11. 4) Then, move the tension sensor C in the direction of arrow (↑) and tighten the screw 1. (Refer to Fig. 2-4-11.) 5) Slightly lo–osen the screw 2. 6) Insert a spacer E (feeler of 0.1 mm thick) between the tension sensor C and tension arm shaft D. 7) While pressing the tension sensor C in the direction of the arrow (↗), adjust the position of the tension sensor C so that the clearance between the tension sensor C and tension arm shaft D is 0.1 mm. Then, tighten the screw 2 for fixing. 8) Lock the screws 1 and 2 with screw sealant. 9) Turn the mode motor clockwise (toward the front side) by hand to set the mechanism in the unloading end position, and remove the spacer E. 10) Restore the cassette housing assembly to the set.

No.	Item	Measuring instruments & Input signals	Mode	Measuring point (◎) Adjustment parts (ⓣ) Adjustment level (☆)	Adjustment procedure

2.5 PRESET OF TRACKING VR

1	Preset of tracking VR		TEST mode 85 88 00 00	◎ Counter display ☆ TRACKING control (on front panel) " 85 8E nd 88 " ⓣ indication End	**Note:** **This adjustment is required after replacement of the tracking VR.** 1) Enter the set into the TEST mode. 2) Press the MENU or SET button so that the counter display shows " 85 88 00 00 ". 3) Set the TRACKING control at the center click position. 4) Press the COUNTER PRESET button. 5) Confirm that " 85 8E nd 88 " is appearing on the counter display.

2.6 AUTOMATIC ADJUSTMENT OF FG DUTY OF CAPSTAN, REEL AND DRUM MOTORS

Note: This adjustment will be performed by the set itself in the automatic adjustment mode.

1	Automatic adjustment of FG duty of capstan, reel and drum motors		TEST mode Sd 88 00 00		1) Enter the set into the TEST mode. 2) Press the MENU or SET button so that the counter display shows " Sd 88 00 00 ". 3) Press the COUNTER RESET button to start the automatic adjustment. 4) The reel motor, capstan motor and drum motor start one after another in this order. After the last motor completely stops, confirm that the counter display shows " Sd 8E nd 88 ". **Note:** **If " Sd 8E nd 88 " still appears on the count-er display, it is thinkable that there is a failure in connection or part. In such an event, check the cause of trouble.** 5) Turn off the power to quit the TEST mode.

No.	Item	Measuring instruments & Input signals	Mode	Measuring point (◎) Adjustment parts (Ⓣ) Adjustment level (☆)	Adjustment procedure

2.7 ADJUSTMENT OF REEL SERVO CIRCUIT

Notes:
- Make sure to reset (rewinding) the cassette torque meter in the SEARCH (X10) mode. Never do it in the FF, REW or REEL SEARCH mode, because there is a high probability that the cassette torque meter will be damaged in such a mode.
- If the cassette torque meter reaches the tape end or beginning in the middle of adjustment, make a fresh start of each adjustment from the step 1).
- All measuring points and adjustment parts are located on the MCTL/SV board unless otherwise specified.

2.7.1 Adjustment of tension sensor

1	Tension bias adjustment	Digital voltmeter	TEST mode 65 88 00 00	◎ Between TP12 and TP13 Ⓣ BIAS (VR2) ☆ 0.05 ± 0.05 V	1) Enter the set into the TEST mode. 2) Press the MENU or SET button so that the counter display shows " 65 88 00 00 ". 3) Press the COUNTER RESET button. 4) Turn the JOG dial in the FWD direction to set the mechanism in the loading end position. 5) Turn VR1 on the MCTL/SV board full counter-clockwise. 6) Check that the tension arm is turned to the utmost in contact with the supply roller 1. 7) Adjust VR2 to obtain the specified level at the measuring point.
2	Tension gain adjustment	Digital voltmeter	TEST mode 65 88 00 00	◎ Between TP12 and TP13 Ⓣ GAIN (VR1) ☆ 1.85 ± 0.1 V	8) Set the paralle check plate. (Refer to Fig. 2-7-2.) 9) Adjust VR1 to obtain the specified level at the measuring point. 10) Remove the positioning jig and turn the JOG dial in the REV direction to set the mechanism into the unloading end position. 11) Press the SELECT button to make the counter display show " 65 8E nd 88 ". **Note:** **If the specified level cannot be obtained, repeat "2.4.3 Adjustment of tension sensor position".**

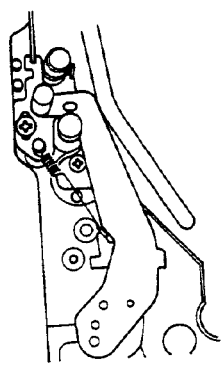

Fig. 2-7-1

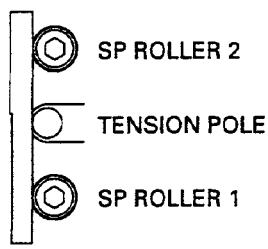

Fig. 2-7-2

No.	Item	Measuring instruments & Input signals	Mode	Measuring point (◎) Adjustment parts (ⓣ) Adjustment level (☆)	Adjustment procedure

2.7.2 Adjustment of torque

1	Adjustment of play supply torque	Cassette torque meter PUJ42881	TEST mode 60 88 00 00	◎ Supply side (Cassette torque meter) ⓣ JOG dia (front panel) ☆ 0.0057 N/m (53 grf/cm)	1) Enter the set into the TEST mode. 2) Press the MENU or SET button so that the counter display shows " 60 88 00 00 ". 3) Press the COUNTER RESET button. 4) Insert the cassette torque meter. 5) Press the PLAY button to start tape travel. 6) Turn the JOG dial to obtain the specified torque at the measuring point. 7) Press the SELECT button. 8) Press the STOP button, and the adjustment value is recorded in the memory with indication on the counter display. 9) Press the EJECT button for taking the cassette torque meter out of the set. **Note:** **If the cassette torque meter reaches the tape end before the STOP button is pressed, make a fresh start of this adjustment from the step 1).**

No.	Item	Measuring instruments & Input signals	Mode	Measuring point (◎) Adjustment parts (ⓣ) Adjustment level (☆)	Adjustment procedure
2	Adjustment of loading supply torque	Cassette torque meter PUJ42881	TEST mode 61 88 00 00	◎ Supply side (Cassette torque meter) ⓣ JOG dial (front panel) ☆ 0.0029 N/m (30 grf/cm)	1) Enter the set into the TEST mode. 2) Press the MENU or SET button so that the counter display shows " 61 88 00 00 ". 3) Press the COUNTER RESET button. 4) Insert the cassette torque meter. 5) Press the PLAY button to start tape travel. 6) Turn the JOG dial to obtain the specified torque at the measuring point. 7) Press the SELECT button. 8) Press the STOP button, and the adjustment value is recorded in the memory with indication on the counter display. 9) Press the EJECT button for taking the cassette torque meter out of the set. **Note:** **If the cassette torque meter reaches the tape end before the STOP button is pressed, make a fresh start of this adjustment from the step 1).**
3	Adjustment of play take-up torque	Cassette torque meter PUJ42881	TEST mode 62 88 00 00	◎ Take-up side (Cassette torque meter) ⓣ JOG dial (front panel) ☆ 0.0167 N/m (170 grf/cm)	1) Enter the set into the TEST mode. 2) Press the MENU or SET button so that the counter display shows " 62 88 00 00 ". 3) Press the COUNTER RESET button. 4) Insert the cassette torque meter. 5) Press the PLAY button to start tape travel. 6) Turn the JOG dial to obtain the specified torque at the measuring point. 7) Press the SELECT button. 8) Press the STOP button, and the adjustment value is recorded in the memory with indication on the counter display. 9) Press the EJECT button for taking the cassette torque meter out of the set. **Note:** **If the cassette torque meter reaches the tape end before the STOP button is pressed, make a fresh start of this adjustment from the step 1).**

No.	Item	Measuring instruments & Input signals	Mode	Measuring point (◎) Adjustment parts (ⓣ) Adjustment level (☆)	Adjustment procedure
4	Adjustment of reverse (x1) supply torque	Cassette torque meter PUJ42881B	TEST mode SF 88 00 00	◎ Supply side (Cassette torque meter) ⓣ JOG dial (front panel) ☆ 0.0173 N/m (176 grf/cm)	1) Enter the set into the TEST mode. 2) Press the MENU or SET button so that the counter display shows " SF 88 00 00 ". 3) Press the COUNTER RESET button. 4) Insert the cassette torque meter. 5) Press the PLAY button and then set the SEARCH dial to X-1. 6) Turn the JOG dial to obtain the specified torque at the measuring point. 7) Press the SELECT button. 8) Press the STOP button, and the adjustment value is recorded in the memory with indication on the counter display. 9) Press the EJECT button for taking the cassette torque meter out of the set. **Note:** **If the cassette torque meter reaches the tape end before the STOP button is pressed, make a fresh start of this adjustment from the step 1).**

No.	Item	Measuring instruments & Input signals	Mode	Measuring point (◎) Adjustment parts (ⓣ) Adjustment level (☆)	Adjustment procedure

2.8 ADJUSTMENT OF A/C HEAD

Notes:
- If the A/C head is abnormally mounted, it may cause decrease of output level and deterioration of S-to-N ratio in playback of a recorded tape, or the servo failure as the worst case because the head fails in reading control signals.
- Set the TRACKING control at the center click position.

2.8.1 Coarse adjustment

Note: The following rough adjustments shall be performed when the A/C head is reinstalled after it was once removed.

1	Temporary installation				1) Temporarily install the A/C head as shown by Fig. 2-8-1. 2) At that time, make the A/C head base parallel with the A/C head arm by adjusting the screws 1 and 2.
2	Rough adjustment of head tilt				3) While using the parallel check plate as the reference, adjust the screw 2 so that the inclination of the A/C head is parallel with the A/C head inclination adjusting tool as shown in Fig. 2-8-2. 4) While playing back a recorded tape (DS-104), check to see if the tape is damaged or wrinkled at the upper part of the lower flange of the take-up guide roller or not. If it is damaged or wrinkled, fine adjust the height of the take-up guide roller.

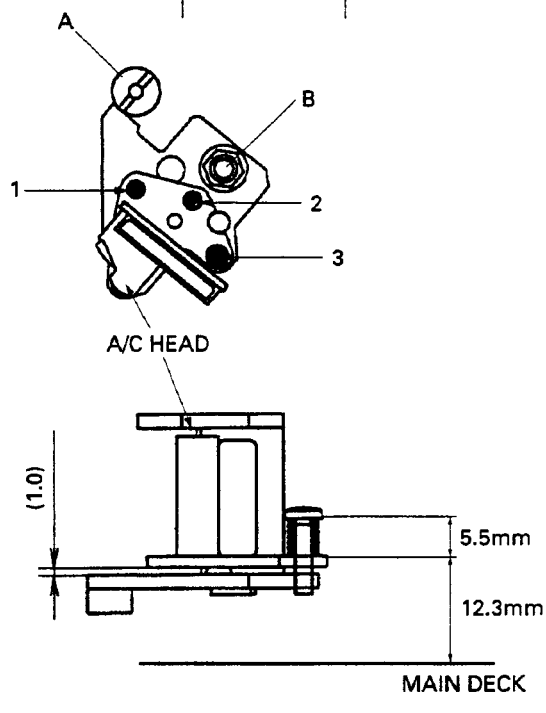

Fig. 2-8-1

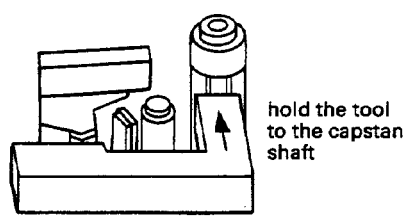

Fig. 2-8-2 (A)

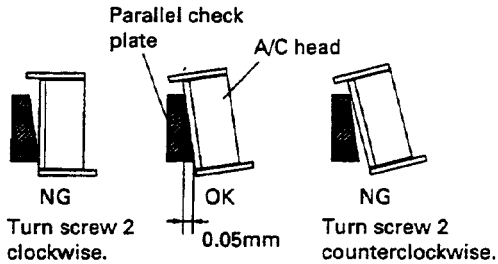

Fig. 2-8-2 (B)

No.	Item	Measuring instruments & Input signals	Mode	Measuring point (◎) Adjustment parts (ⓣ) Adjustment level (☆)	Adjustment procedure
3	Rough adjustment of head height	Audio tester or Oscilloscope Alignment tape MHP	TEST mode 69 88 00 00	◎ TP3 (CH1) [ANA AUDIO] ◎ TP4 (CH2) [ANA AUDIO] ☆ Nut B Maximum output level (both CH1, CH2)	5) Enter the set into the TEST mode. 6) Press the MENU or SET button so that the counter display shows " 69 88 00 00 ". 7) Press the COUNTER RESET button. 8) Insert the audio alignment tape and play it back. 9) Adjust the nut B to maximize the audio level at the measuring point. (Refer to Fig. 2-8-3.)
4	Rough adjustment of head azimuth	Audio tester or Oscilloscope Alignment tape MHP	TEST mode 69 88 00 00	◎ TP3 (CH1) [ANA AUDIO] ◎ TP4 (CH2) [ANA AUDIO] ⓣ Screw 1 ☆ Maximum output level (both CH1, CH2)	10) Adjust the screw 1 to maximize the audio level at the measuring point. 11) Repeat the above steps 3) and 4) to check to see whether there is something abnormal or not. If they need readjustment, repeat the steps from 3) through 10) several times until satisfactory results can be obtained. 12) Check the tilt, height and azimuth of the head again.

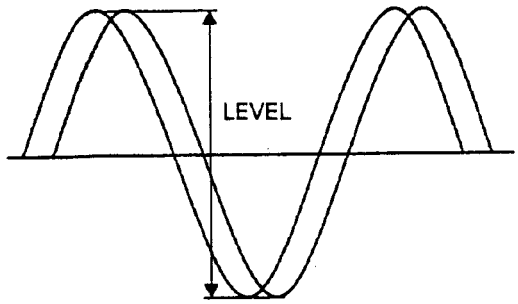

Fig. 2-8-3

No.	Item	Measuring instruments & Input signals	Mode	Measuring point (◎) Adjustment parts (ⓣ) Adjustment level (☆)	Adjustment procedure

2.8.2 Adjustment of X-value

Note: Set the TRACKING control to the center click position and the AUTO TRACKING switch to OFF.

1	X-value adjustment	Oscilloscope (V-rate, 10:1) Alignment tape MSHP-X for PV X-value adjustment	TEST mode 69 88 00 00	◎ TP1 [RF PR02] ◎ TP12 [PV PROCESS] ⓣ Taper nut A ☆ Pulse timing shown in Fig. 2-8-4	1) Enter the set into the TEST mode. 2) Press the MENU or SET button so that the counter display shows " 69 88 00 00 ". 3) Press the COUNTER RESET button. 4) Insert the alignment tape MSHP-X for PV X-value adjustment and play it back. 5) Observe the waveform at the measuring point through the oscilloscope. 6) Adjust the taper nut A so that the amplitude of RF waveform is maximum and the phase of non-recorded portion corresponds to the rise timing of FRP pulse. 7) While turning the TRACKING control clockwise and counterclockwise, confirm that the amplitude of the RF waveform is maximum as it is set at the center click position.

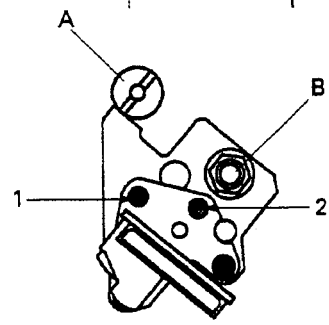

Fig. 2-8-4

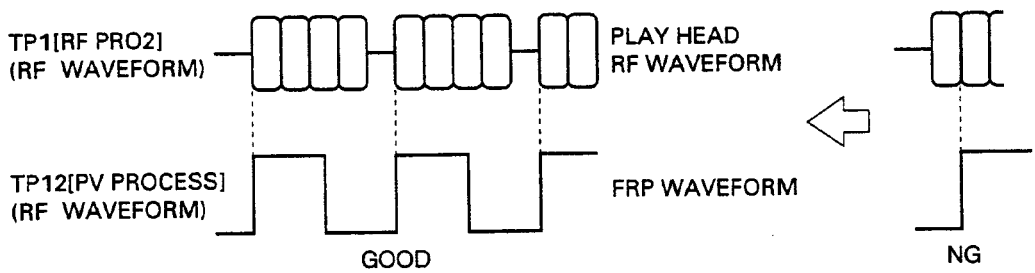

Fig. 2-8-5

2	Head tilt check				8) Check the tilt of the A/C head with the A/C head tilt check jig. 9) If there is something wrong, repeat "2.8.1 Coarse adjustment" from the step 3) through 10).

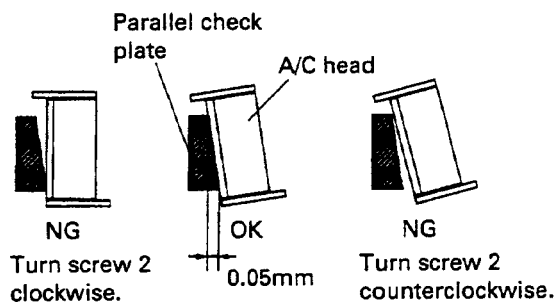

Fig. 2-8-6

No.	Item	Measuring instruments & Input signals	Mode	Measuring point (◎) Adjustment parts (ⓣ) Adjustment level (☆)	Adjustment procedure

2.8.3 Adjustment of azimuth

1	Check of tape's lower edge regulation by roller beside A/C head	VHS tape	TEST mode 69 88 00 00 PLAY		1) Play a VHS tape. 2) Check to see if the lower edge regulation of tape by the upper part of the take-up guide roller's lower flange smoothly transports the tape and it does not damage or wrinkle it. If the tape is damaged or wrinkled at that point, adjust the height of the guide roller.
2	Adjustment of A/C head azimuth	Oscilloscope (10:1) Alignment tape MHP	TEST mode 69 88 00 00 PLAY	◎ TP3 (CH1) [ANA AUDIO] ◎ TP4 (CH2) [ANA AUDIO] ⓣ Screw 1 ☆ Match CH1 and CH2 in phase with each other.	3) Play back the alignment tape MHP. 4) Adjust the screw 1 so that CH1 and CH2 have maximum amplitude and match with each other in the phase at the respective measuring points.

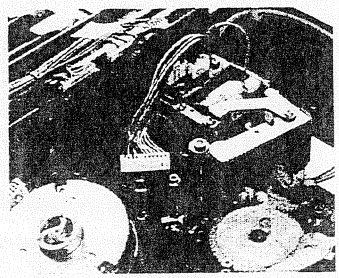

Fig. 2-8-7

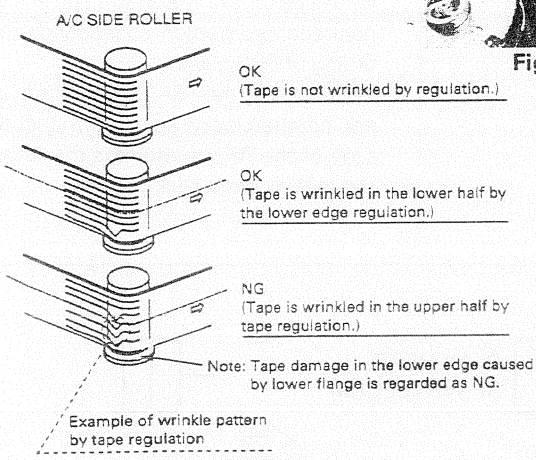

Fig. 2-8-8

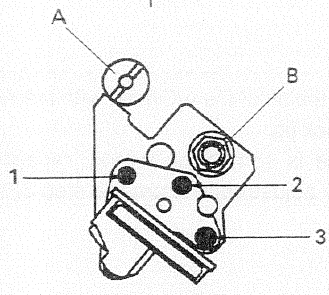

Fig. 2-8-9

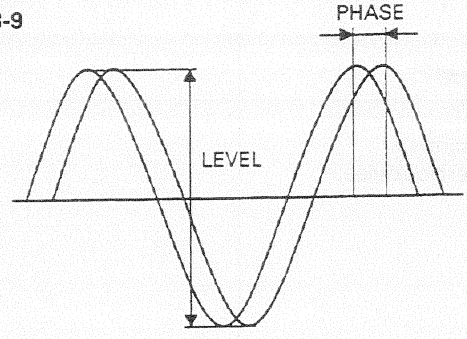

Fig. 2-8-10

No.	Item	Measuring instruments & Input signals	Mode	Measuring point (◎) Adjustment parts (ⓣ) Adjustment level (☆)	Adjustment procedure
3	Check of tape travel in SEARCH mode	VHS tape	TEST mode 69 88 00 00 SEARCH FWD SEARCH REV	◎ Between take-up guide roller - capstan - take-up guide arm roller	5) While playing a VHS tape alternately in the SEARCH FWD and SEARCH REV modes, check to see if there is any damage or wrinkle in the tape. 6) If the tape is wrinkled or twisted, adjust the height of the take-up guide arm roller. **• Special adjustment technique** a) As a coarse adjustment, play a tape in the FWD mode and check to see if the tape sags or gets loose partially between the capstan and take-up guide arm roller or not. If the tape is loose in the upper part, lower the take-up guide arm roller. Or, if the tape is loose in the lower part, raise the take-up guide arm roller to take up the slack in the tape. b) Check that the take-up guide roller regulates tape travel by the lower edge in the FWD PB mode. c) Adjust the height of the take-up guide arm roller precisely so that tape travels on the same level in both the REV PB and FWD PB modes.
4	Check of head azimuth after SEARCH tape travel	Alignment tape MHP	TEST mode 69 88 00 00 PLAY	◎ TP3 (CH1) [ANA AUDIO] ◎ TP4 (CH2) [ANA AUDIO] ⓣ Screw 1 ☆ Match CH1 and CH2 in phase with each other.	7) Repeat the above steps 3) and 4) for final check. If there is something unsatisfactory, fine adjust the screw 1.

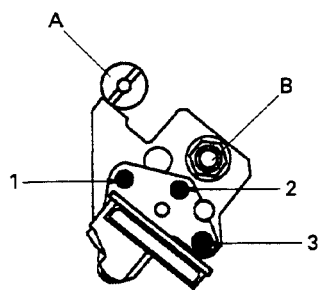

Fig. 2-8-11

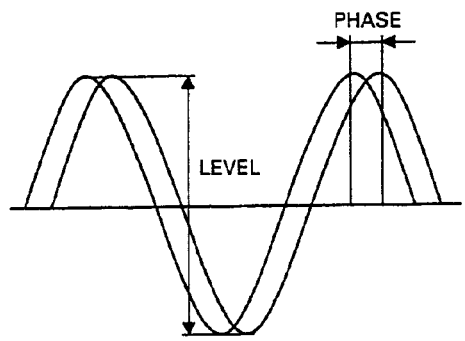

Fig. 2-8-12

No.	Item	Measuring instruments & Input signals	Mode	Measuring point (◎) Adjustment parts (ⓣ) Adjustment level (☆)	Adjustment procedure
5	Adjustment of A/C head height	Oscilloscope (10:1) Alignment tape MBA-3	TEST mode *68 88 00 00* PLAY	TP3 (CH1) [ANA AUDIO] TP4 (CH2) [ANA AUDIO] Nut B Minimum level	8) Adjust the nut B to minimize the amplitude of both CH1 and CH2 waveforms. (Refer to Fig. 2-8-14.) 9) Enter the set into the TEST mode.
6	Tracking preset	Alignment tape MSHP-X for PV pattern alignment	TEST mode *68 88 00 00*		10) Press the MENU or SET button so that the counter display shows "*68 88 00 00*". 11) Insert the alignment tape MSHP-X for PV pattern alignment. 12) Set the TRACKING control at the center click position. 13) Confirm that "*68 8E nd 88*" is appearing on the counter display.

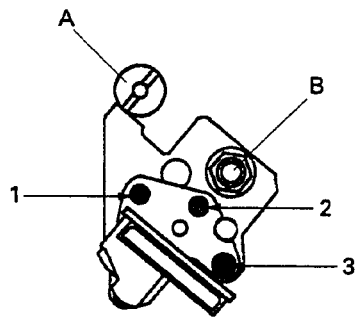

Fig. 2-8-13

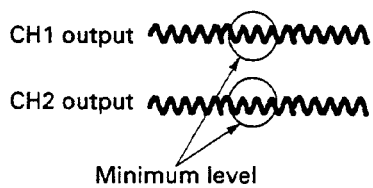

Fig. 2-8-14

No.	Item	Reference picture/drawing	Procedure

2.9 ADJUSTMENT OF TAPE TRANSPORT SYSTEM

Note: The tape transport system generally do not need to be adjustment. Because it was precisely adjusted at the factory before shipment. However, it needs check and adjustment, if set is used for a considerably long time or some part of the tape transport system are replaced.

2.9.1 Check of tape transport system

1 Check

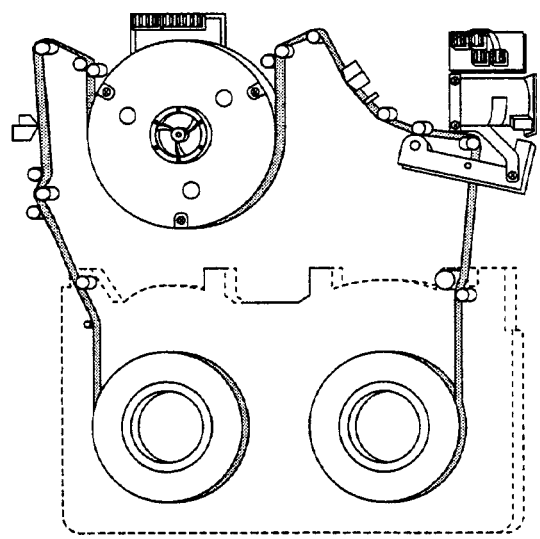

Fig. 2-9-1

Note:
Use a some signal recorded tape (DS-104) for this check.

1) Perform the following check with the tape beginning and tape end portions.
2) While repeating loading and unloading operations alternately several times, check to see if the tape is not damaged by the supply and take-up guide rollers and take-up guide arm roller.
3) Check that the tape is not damaged or wrinkled in the PLAY, FWD (SEARCH) and REV (SEARCH) operations.
4) If the tape is wrinkled or damaged by some roller, adjust the height of the roller.

Symbol	Part Name	Tape regulation
A	Supply roller 1	Non-regulation
B	Tension pole	Non-regulation
C	Supply roller 2	Lower edge regulation
D	Full erase head	Non-regulation
E	Supply tape scraper	Non-regulation
F	Supply guide roller	Upper edge regulation
G	Supply slant pole	Non-regulation
H	Supply impedance roller	Non-regulation
J	Drum assembly	Lower edge regulation
K	Take-up impedance roller	Non-regulation
L	Take-up slant pole	Non-regulation
M	Take-up guide roller	Upper edge regulation
N	A/C head	Non-regulation
P	Take-up tape scraper	Non-regulation
Q	Take-up roller	Lower edge regulation
R	Capstan	Non-regulation
S	Guide arm roller	Upper edge regulation

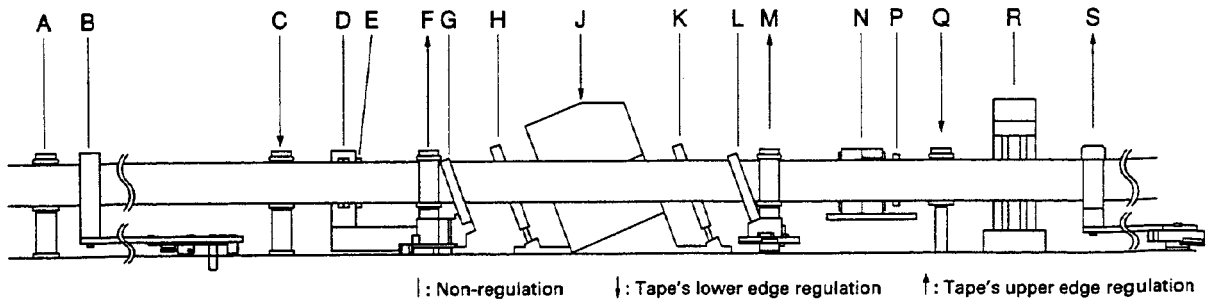

Fig. 2-9-2

No.	Item	Reference picture/drawing	Procedure

2.9.2 Adjustment of tape travel in search mode (with tape end)

Note: Use the end portion of recorded tape (DS-104).

1	Take-up guide arm roller height adjustment (1)	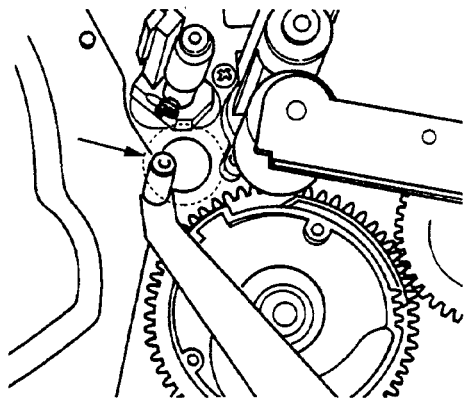 Fig. 2-9-3 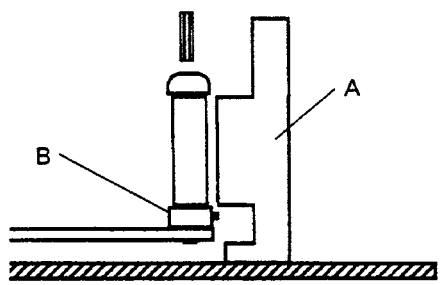 Fig. 2-9-4	**Note:** **This adjustment shall be performed after the take-up guide arm roller assembly is installed.** 1) Enter the set into the TEST mode. 2) Press the MENU or SET button to show "66 88 00 00" on the counter display. 3) Press the COUNTER RESET button. 4) Turn the JOG dial in the FWD direction to set the mechanism in the loading position shown in Fig. 2-9-3. 5) Set the height gauge A on the cut plane of the main deck shown in Fig. 2-9-3. 6) Check the height of the lower surface (B in Fig. 2-9-4) of the take-up guide arm roller's upper flange. 7) If there is a difference between the actual height of the lower surface and the jig, loosen the set-screw 1 and adjust the height of the take-up guide arm roller with an Allen (hexagon headed) screw-driver. (Reference height: 28.35 mm) 8) After removing the height adjustment jig, turn the JOG dial in the REV direction to set the mechanism in the unloading end position. 9) Press the SELECT button to show "66 8E nd 88" on the counter display. 10) The TEST mode is quitted. 11) Turn on the mechanism and insert a some signal recorded tape (DS-104) to play the end portion. 12) Precisely adjust the height of the take-up guide arm roller so that tape wrinkle/twist is minimized between the take-up guide roller - capstan - take-up guide arm roller in both the SEARCH REV and SEARCH FWD modes that are alternately switched to each other in this adjustment. For this adjustment, be aware that the height adjustment range is limited to within ±1/2 turn from the reference height. 13) Moreover, pay careful attention to the following matters. a) When the tape transport mode is changed from the SEARCH FWD to SEARCH REV, in particular, tape is momentarily twisted or wrinkled a little for the reason of change in tape regulation. Therefore, adjust the height of parts concerned to minimize such twist or wrinkle in tape. b) If the tape is regulated by either of upper and lower edges at the flange of the take-up guide arm roller or is wrinkled between the capstan and take-up guide arm roller, it results in tape damage. Therefore, adjust the height of those parts to minimize such wrinkle in the tape. c) If wrinkle or twist in tape increases as a result of the above adjustment a) and/or b), fine adjust the height of the take-up guide roller so as to lower it minutely. This height adjustment is allowed in the range of 1/4 turn for raising or 1/2 turn for lowering from the reference height.

No.	Item	Reference picture/drawing	Procedure
2	Supply roller 1 height adjustment (1)	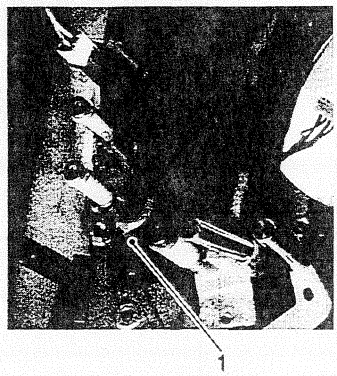 Fig. 2-9-5	**Note:** **This adjustment shall be performed after the supply roller 1 is replaced.** 1) Remove the screw 1. (Refer to Fig. 2-9-5.) 2) Set the height gauge in the vacant screw hole for the screw 1.
		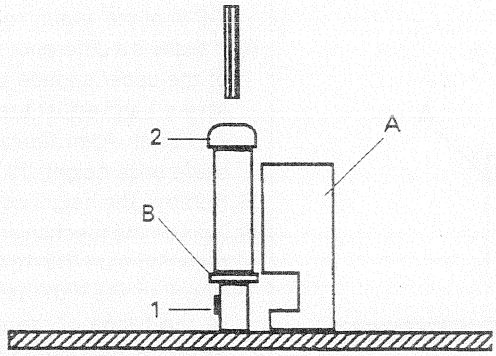 Fig. 2-9-6	3) Check the height of the lower surface (B in Fig. 2-9-6) of the supply roller 1's lower flange. 4) If there is a difference between the actual height of the lower surface and the jig, loosen the set-screw 1 and adjust the height of the supply roller 1 with an Allen (hexagon headed) screwdriver. (Reference height: 15.375 mm or lower) 5) After removing the height adjustment jig, again screw the screw 1. 6) Turn on the mechanism and insert a recorded tape (DS-104) to play the end portion. 7) Check to see if the tape is wrinkled or damaged by the flange of the supply roller 1 in both the SEARCH REV and SEARCH FWD modes and when the mode is switched from the SEARCH REV to SEARCH FWD. (Check the same for the tension pole.) 8) If the tape is still wrinkled or damaged, fine adjust the height of the supply roller 1. (The maximum height of the upper surface of the lower flange is limited to 15.375 mm or lower.)

No.	Item	Reference picture/drawing	Procedure
3	Supply roller 2 height adjustment (1)	 **Fig. 2-9-7** 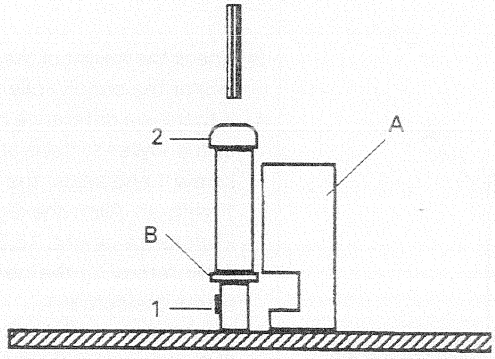 **Fig. 2-9-8**	**Note:** **This adjustment shall be performed after the supply roller 2 is replaced.** 1) Move the full erase head and the cut plane of the main deck will be exposed. 2) Set the height guage A on the cut plane of the main deck shown in Fig. 2-9-7. 3) Check the height of the upper surface (B in Fig. 2-9-8) of the supply roller 2's lower flange. 4) If there is a difference between the actual height of the upper surface and the jig, loosen the set-screw 1 and adjust the height of the supply roller 2 with an Allen (hexagon headed) screwdriver. (Reference height: 15.55 mm) 5) Remove the height adjustment jig. 6) Turn on the mechanism and insert a some signal recorded tape (DS-104) to play the end portion. 7) Check to see if the tape is wrinkled or damaged by the flange of the supply roller 2 in both the SEARCH REV and SEARCH FWD modes and when the mode is switched from the SEARCH REV to SEARCH FWD. (Regarding tape travel on the tension pole, it is not problem that the tape brushes past it.) 8) If the tape is still wrinkled or damaged, fine adjust the height of the supply roller 2. At that time, be aware that the height adjustment is allowed within ±1/2 turn from the reference height.

No.	Item	Reference picture/drawing	Procedure

2.9.3 Adjustment of tape travel in search mode (with tape beginning)

Notes: • Use the beginning portion of some signal recorded tape (DS-104).
• This adjustment must follow "2.9.2 Adjustment of tape travel in search mode (with tape end)".

1	Take-up guide arm roller height adjustment (2)		1) Turn on the mechanism and insert a some signal recorded tape (DS-104) to play the beginning portion. 2) Check to see if the degree of tape wrinkle/twist between the take-up guide roller - capstan - take-up guide arm roller when the tape travel mode is switched from the SEARCH FWD to SEARCH REV and vice versa is the same as in the take-up guide arm roller height adjustment (1). 3) If the tape is much more twisted/wrinkled, fine adjust the height of the take-up guide roller to minimize twist/wrinkle in the tape. This height adjustment is allowed within ±1/2 turn from the reference height. 4) For completing this adjustment, pay careful attention to the following matters. a) When the tape transport mode is changed from the SEARCH FWD to SEARCH REV, in particular, tape is a little twisted or wrinkled momentarily for the reason of change in tape regulation. Therefore, adjust the height of parts concerned to minimize such twist or wrinkle in the tape. b) If the tape is regulated by either of upper and lower edges at the flange of the take-up guide arm roller or is wrinkled between the capstan and take-up guide arm roller, it results in tape damage. Therefore, adjust the height of those parts to minimize such wrinkle in the tape. c) If wrinkle or twist in tape increases as a result of the above adjustment a) and/or b), fine adjust the height of the take-up guide roller so as to lower it minutely. This height adjustment is allowed in the range of 1/4 turn for raising or 1/2 turn for lowering from the reference height.

No.	Item	Reference picture/drawing	Procedure
2	Supply roller 1 height adjustment (2)		1) Turn on the mechanism and insert a some signal recorded tape (DS-104) to play the beginning portion. 2) Check to see if the tape is wrinkled or damaged by the flange of the supply roller 1 in both the SEARCH REV and SEARCH FWD modes and when the mode is switched from the SEARCH REV to SEARCH FWD. (Check the same for the tension pole.) 3) If the tape is still wrinkled or damaged, fine adjust the height of the supply roller 1. (The maximum height of the upper surface of the lower flange is limited to 15.375 mm or lower.)
3	Supply roller 2 height adjustment (2)		1) Turn on the mechanism and insert a some signal recorded tape (DS-104) to play the beginning portion. 2) Check to see if the tape is wrinkled or damaged by the flange of the supply roller 2 in both the SEARCH REV and SEARCH FWD modes and when the mode is switched from the SEARCH REV to SEARCH FWD. (Regarding tape travel on the tension pole, it is not problem that the tape brushes past it.) 3) If the tape is still wrinkled or damaged, fine adjust the height of the supply roller 2. At that time, be aware that the height adjustment is allowed within ± 1/2 turn from the reference height.

No.	Item	Reference picture/drawing	Procedure

2.9.4 Adjustment of take-up roller

1	Check and adjustment	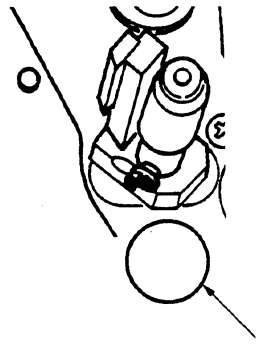 Fig. 2-9-9	1) Set the height gauge A on the cut plane of the main deck as shown in Fig. 2-9-9.
		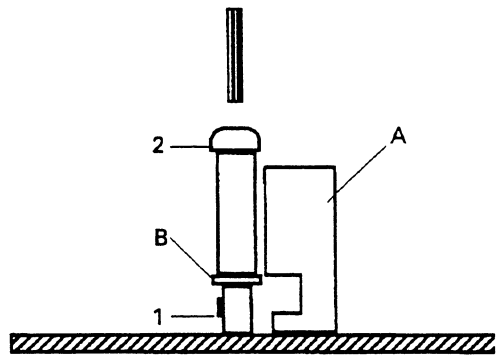 Fig. 2-9-10	2) Check the height of the upper surface (B in Fig. 2-9-10) of the take-up roller's lower flange. 3) If there is difference between the actual height and the reference height of the jig, loosen the set screw 1 and adjust the height of the take-up roller with an Allen (hexagon headed) screwdriver. (Reference height: 15.55 mm) 4) Remove the height adjustment jig.
2	Fine adjustment		5) Turn on the mechanism and insert a some signal recorded tape (DS-104). 6) While playing the tape, check that the tape smoothly travels on the upper surface of the lower flange of the take-up roller. 7) If there is something wrong, adjust the height of the take-up roller. 8) If height adjustment of the take-up roller cannot remove twist/wrinkle in the tape in the SEARCH FWD and SEARCH REV modes, fine adjust the height of parts concerned according to the preceding sections 2.9.2 and 2.9.3. If adjustments of those sections are repeated, it needs to perform "2.8.2 Adjustment of X-value" and "2.8.3 Adjustment of head azimuth" once again for checking the normality of the mechanism.

No.	Item	Measuring instruments & Input signals	Mode	Measuring point (◎) Adjustment parts (ⓣ) Adjustment level (☆)	Adjustment procedure

2.10 ADJUSTMENT OF INTERCHANGEABILITY

Notes:
- When the drum assembly or A/C head assembly is disassembled or replaced, they needs to adjust the interchangeability.
- Set the AUTO TRACKING to OFF position.
- Prior to this adjustment, check and adjust the tracking preset (refer to 2.8.3, item 6) without fail.

2.10.1 Adjustment of linearity

1	Preparation	• Oscilloscope (10:1), Ext. trigger: TP10 [RF PRO2] • PV pattern alignment tape MSHP	PLAY	◎ TP23 [REC ITI] (BR-D80/D85) ◎ TP1 [RF PRO2] (BR-D50) ⓣ Screw 1 (Fig. 2-10-1) ☆ Max. RF crest value	1) Play the PV pattern alignment tape MSHP. 2) Set the TRACKING control on the front panel at the center click position. 3) Turn the taper nut 1 to adjust the A/C head position so that maximum amplitude of the waveform can be obtained at the measuring point. (Refer to Fig. 2-10-2, rough adjustment is allowed.) 4) Turn the TRACKING control to maximize the amplitude of the RF waveform. **Note:** **If adjustment of the guide roller (supply and take-up) cannot flatten the RF waveform, it needs to replace the drum assembly (refer to 2.3.2).** 5) If the waveform is observed like (a) in Fig. 2-10-3, adjust the supply guide roller. On the other hand, if the waveform is observed like (b) in Fig. 2-10-3, adjust the take-up guide roller.

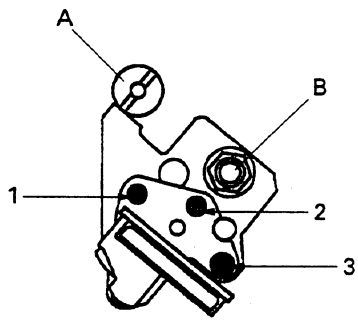

Fig. 2-10-1

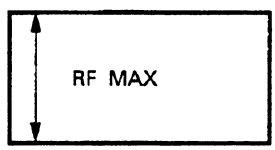

Fig. 2-10-2

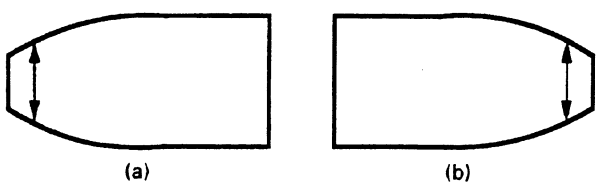

Fig. 2-10-3

No.	Item	Measuring instruments & Input signals	Mode	Measuring point (◎) Adjustment parts (ⓣ) Adjustment level (☆)	Adjustment procedure
2	Adjustment of supply guide roller	• Oscilloscope (10:1), Ext. trigger: TP10 [RF PRO2] • PV pattern alignment tape MSHP	PLAY	◎ TP23 [REC IT] (BR-D80/D85) ◎ TP1 [RF PRO2] (BR-D50) ⓣ Supply guide roller ☆ Flat frequency resporse	1) Loosen the L.H. screw 2. (Refer to Fig. 2-10-4.) 2) Play the PV pattern alignment tape MSHP. 3) Observe waveform at the measuring point through the oscilloscope. 4) Set an Allen (hexagon headed) screwdriver in "A" of the guide roller and turn it counterclockwise once. (Fig. 2-10-4). 5) After confirming that the waveform is observed like (a) in Fig. 2-10-5, turn the Allen screwdriver gradually clockwise. 6) If the waveform is flat with maximum amplitude (refer to Fig. 2-10-5(b)), proceed to the next step 7). If the amplitude is maximum but the waveform is like (a) in Fig. 2-10-5, it needs to replace the drum assembly. If the waveform is observed like (c) in Fig. 2-10-5, adjust the take-up guide roller. 7) Fine adjust the height of the supply guide roller so that the waveform is flat but changes in the amplitude only when the TRACKING control is turned.

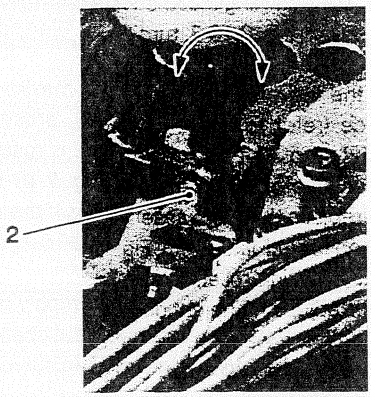

Fig. 2-10-4

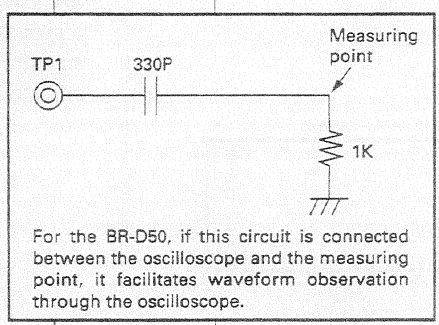

For the BR-D50, if this circuit is connected between the oscilloscope and the measuring point, it facilitates waveform observation through the oscilloscope.

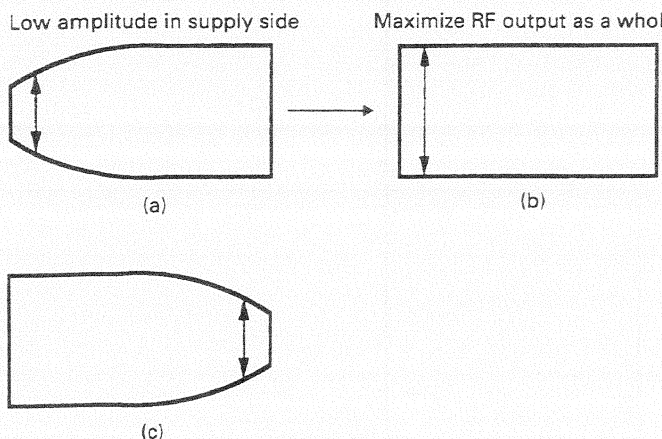

Fig. 2-10-5

No.	Item	Measuring instruments & Input signals	Mode	Measuring point (◎) Adjustment parts (ⓣ) Adjustment level (☆)	Adjustment procedure
2	Adjustment of take-up guide roller	• Oscilloscope (10:1), Ext. trigger: TP10 [RF PRO2] • PV pattern alignment tape MSHP	PLAY	◎ TP23 [REC ITI] (BR-D80/D85) ◎ TP1 [RF PRO2] (BR-D50) ⓣ Take-up guide roller ☆ Flat frequency resporse	1) Loosen the L.H. screw 2. (Refer to Fig. 2-10-6.) 2) Play the PV pattern alignment tape MSHP. 3) Observe waveform at the measuring point through the oscilloscope. 4) Set an Allen (hexagon headed) screwdriver in "A" of the guide roller and turn it counterclockwise once. (Fig. 2-10-6). 5) After confirming that the waveform is observed like (a) in Fig. 2-10-7, turn the Allen screwdriver gradually clockwise. 6) If the waveform is flat with maximum amplitude (refer to Fig. 2-10-7(b)), proceed to the next step 7). If the amplitude is maximum but the waveform is like (a) in Fig. 2-10-7, it needs to replace the drum assembly. If the waveform is observed like (c) in Fig. 2-10-7, adjust the supply guide roller. 7) Fine adjust the height of the supply guide roller so that the waveform is flat but changes in the amplitude only when the TRACKING control is turned. 8) For checking the linearity, use the software exclusive for this purpose. If the linearity is still out of the specification in spite of the above adjustment, make a fresh start of the linearity adjustment.

Fig. 2-10-6

Low amplitude in take-up side

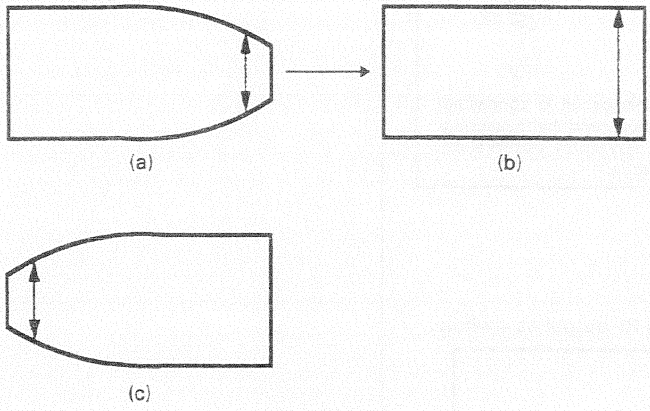

Fig. 2-10-7

SECTION 3

ELECTRICAL ADJUSTMENT

Contents

3.1 PRECAUTIONS 3-1

3.1.1 Tools, test instruments necessary for adjustment 3-1

3.1.2 Setting mode for electrical adjustment 3-1

3.1.3 Setting switch for electrical adjustment 3-1

3.1.4 Signals required for adjusting video system 3-1

3.1.5 Location of main P.C. boards 3-2

3.1.6 How to setting the TEST MODE 3-2

3.2 ADJUSTMENT OF MECHACON/SERVO CIRCUIT 3-2

3.3 ADJUSTMENT OF RF PROCESS CIRCUIT 3-3

3.4 ADJUSTMENT OF REC/ITI CIRCUIT 3-5

3.5 ADJUSTMENT OF OUT MEN CIRCUIT 3-5

3.6 ADJUSTMENT OF OUT/GEN CIRCUIT 3-6

3.7 ADJUSTMENT OF OUT ENC CIRCUIT 3-9

3.8 ADJUSTMENT OF ANA IN CIRCUIT 3-12

3.9 ADJUSTMENT OF AUDIO CIRCUIT 3-17

SECTION 3
ELECTRICAL ADJUSTMENT

3.1 PRECAUTIONS

Before proceeding to any electrical adjustment, it is required to confirm without fail that the objective item (function or part) is out of order. Moreover, for the item that needs exact mechanical adjustment prior to electrical adjustment, make sure that it is mechanically normal first and then proceed to electrical adjustment.
Start electrical adjustment at least 10 minutes after the VTR has been turned on.
Regarding an oscilloscope to be used for measurement, use the 10:1 probe.

3.1.1 Tools, test instruments necessary for adjustment

(1) Test instruments

- Oscilloscope (dual-trace type for 300 MHz or higher frequency, used for 3.3.3 FILTER input level adjustment)
- Oscilloscope (dual-trace type for 100 MHz or higher frequency)
- Composite and Y/C video signal generator (TEKTRONIX TSG130A or equivalent)
- Component signal generator (TEKTRONIX TSG130A or equivalent)
- Vectorscope (TEKTRONIX 520A or equivalent)
- Frequency counter (sensitivity for 10 MHz or higher and 100 mV or lower)
- Digital voltmeter (capable of indicating 1 mV DC at lowest)
- Video monitor
- Audio tester

(2) Tools

- Extension board, L (KLJ0054)
- Extension board, S (KLJ0055)
- Recording tape (DS-104)

3.1.2 Setting mode for electrical adjustment

1. Component signal
   Set to "TYPE M Ⅱ" for component signal without exception. (Select "LOW" for MENU No. 104 "COMPONENT OUT LEVEL".)
2. Test mode 100 % marker signal
   Set TEST mode to No. 78 "LEVEL MARK 1".
3. Black burst signal
   Set TEST mode to No. 7A "BLACK BURST".
4. Built-in color-bar signal
   Select "INTERNAL COLOR BAR" for MENU No. 111 "REC SIGNAL SELECT".

3.1.3 Setting switch for electrical adjustment

1. TBC REMOTE terminal:
   OPEN
2. DIP switch S1 on OUT ENC board:
   Set all segmental switches to "ADJ" position for adjusting video system.
3. When video signal input selecting as shown below.
   - Componet input
     VIDEO INPUT switch : Y/C (CPN)
     Menu switch No.109 VIDEO INPUT : CPN (1)
   - Y/C input
     VIDEO INPUT switch : Y/C (CPN)
     Menu switch No.109 VIDEO INPUT : Y/C (0)
   - LINE input
     VIDEO INPUT switch : LINE
4. All other switches:
   Original position as they were set on shipment
   - Front panel
     REMOTE : LOCAL
     COUNTER : CTL
     AUDIO MONITOR : MIX
     AUDIO INPUT : DIG
     VIDEO INPUT : DIG
   - Rear panel
     AUDIO LEVEL : +4dB

• Specifications of alignment tape

MSHP-X

Video signal	Audio signal	Time	Application
Color bar	—	50 min	For adjustment of tracking preset

MSHV-1

Video signal	Audio signal	Time	Application
Moving picture	Music sound	50 min	For check and adjustment of RF process circuit Search audio is recored

MS-1

Video signal		Audio signal	Time	Application
1	Color bar	1kHz/-20dBFs	10 min	• For check and adjustment of video system PB circuit
2	Pulse & bar		5 min	
3	Multiburst		5 min	• For check and adjustment of audio PB circuit
4	Bowtie		5 min	• Serch audio is recorded

3.1.4 Signals required for adjusting video system

Note: All color levels appearing in this section are those to be measured with the following color-bar signals. If other signals such as signal of 75 % color level, signal of different setup level, etc. are used, it not only brings measured value different from the specification but also causes maladjustment.

1. Y/C and composite color-bar signals (color level 100 %, 7.5 % setup)

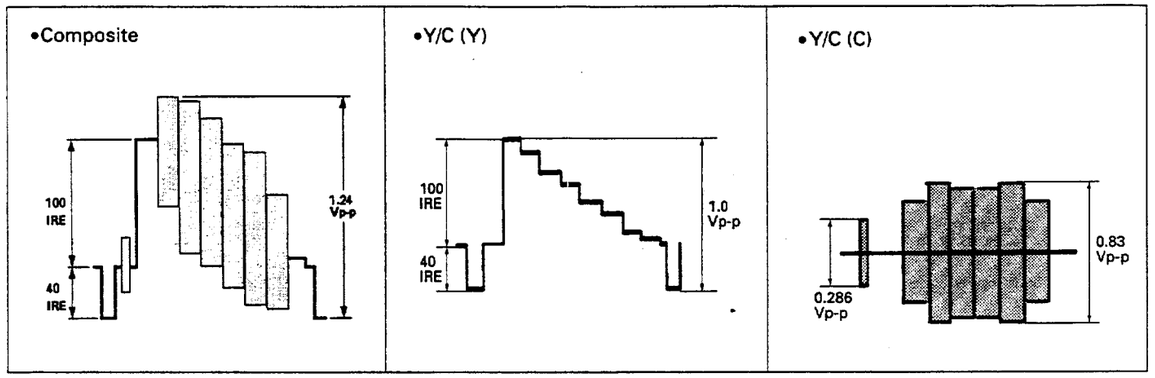

2. Component color-bar signal (color level 100 %, 7.5 % setup)

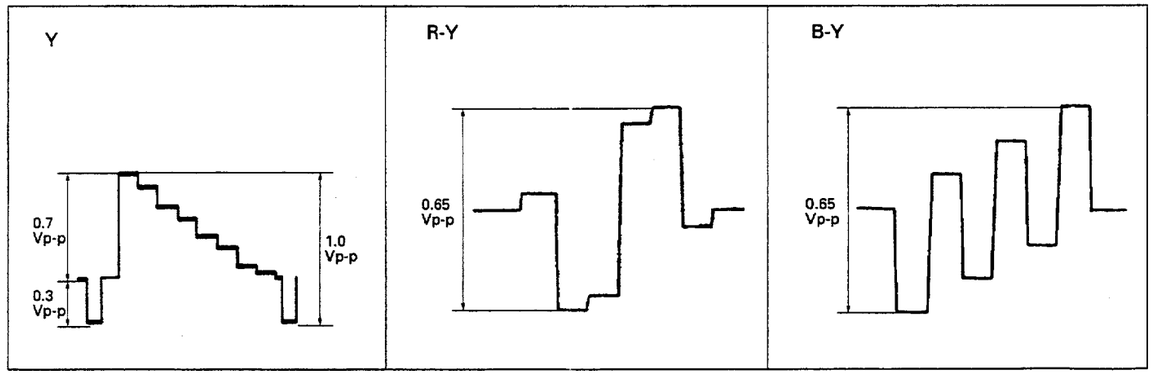

3. Component bowtie signal

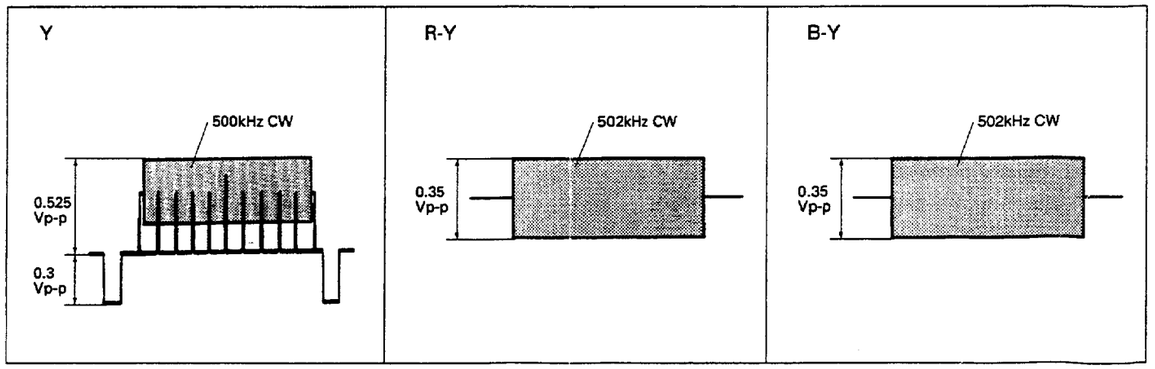

3-1

3.1.5 Location of main P.C. boards

If this page is left folded out through electrical adjustment, it facilitates adjustment work.

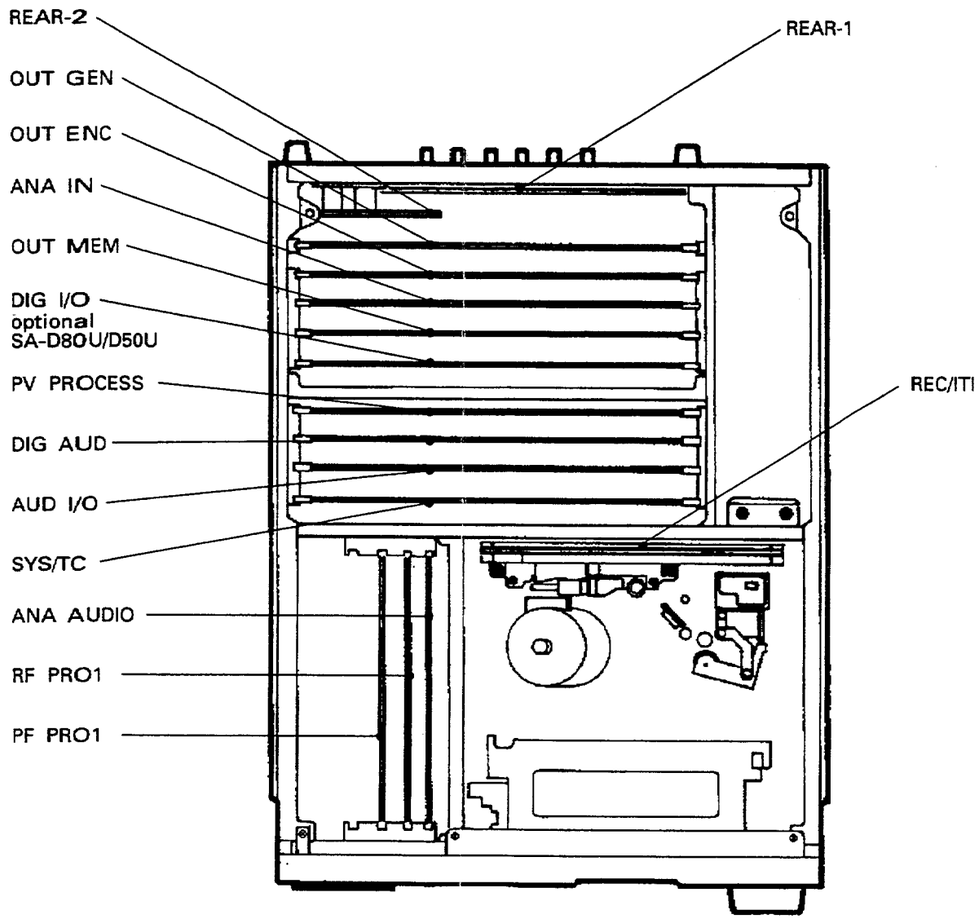

WARNING

When mounting each board, pay careful attention to its mounting place, particularly to the mounting place of the PV PROCESS board. If the PV PROCESS board is mounted in a wrong place or any board other than the PV PROCESS board is mounted in the place specified for the PV PROCESS board, the wrong mounted board may possibly be damaged.

3.1.6 How to setting the TEST MODE

(1) Eject the cassette tape, and turn the power off.
(2) Turn the power on, and press the [COUNTER RESET], [FF] and [REW] buttons simultaneously within 2 seconds after the counter display comes up.
(3) On-screen display and counter display will be changed over the test mode.
(4) With the [MENU] (UP) and the [SET] (DOWN) buttons, access the mode to be desired to change on the display.
(5) Paform the mode with the [COUNTER RESET] button.

Details of the TEST MODE, refer to the "1.9 TEST MODE".

No.	Item	Measuring instruments & Input signals	Mode	Measuring point (◎) Adjustment parts (⇧) Adjustment level (☆)	Adjustment procedure

3.2 ADJUSTMENT OF MECHACON/SERVO CIRCUIT

1	Motor FG duty adjustment	—	• Test mode [5d] REEL CAP FG (A)	◎ Counter display ⇧ [COUNTER RESET] button	1) Activate TEST mode No. 5d. 2) Press the [COUNTER RESET] button. 3) The reel motor, capstan motor and drum motor starts one after another in this order. 4) With a message "END" appearing on the counter display, automatic adjustment is complete.
2	Tracking VR preset adjustment	—	• Test mode [85] TR VR PRESET (A)	◎ Counter display ⇧ TRACKING VR ⇧ [COUNTER RESET] button	1) Activate TEST mode No. 85. 2) Set the TRACKING VR to the center click position. 3) Press the [COUNTER RESET] button. 4) With a message "END" appearing on the counter display, automatic adjustment is complete.
3	Tracking preset adjustment	• Alignment tape MSHP-X	• Test mode [68] TRACKING (A) • Menu switch No. 005 AUTO TRACKING: ON • PB	◎ Counter display ⇧ [COUNTER RESET] button	**Note:** This adjustment must be performed after the X-value adjustment is complete. 1) Activate TEST mode No. 68. 2) Play the alignment tape MSHP-X. 3) Press the [COUNTER RESET] button. 4) With a message "END" appearing on the counter display, automatic adjustment is complete.
4	PB switching point adjustment	• Alignment tape MSHV-1	• Test mode [64] SW POINT (M) • Menu switch No. 005 AUTO TRACKING: ON • PB	◎ Counter display ⇧ [COUNTER RESET] button	1) Activate TEST mode No. 64. 2) Play the alignment tape MSHV-1. 3) The SERVO LOCK LED goes on and then, press the [COUNTER RESET] button. 4) With a message "END" appearing on the counter display, automatic adjustment is complete.

3-2

No.	Item	Measuring instruments & Input signals	Mode	Measuring point (◎) Adjustment parts (ⓣ) Adjustment level (☆)	Adjustment procedure

3.3 ADJUSTMENT OF RF PROCESS CIRCUIT

Note: This adjustment must be performed for both the RF PROCESS board 1 and 2.

1	Threshold level adjustment	• Digital voltmeter	•Menu switch No. 005 AUTO TRACKING: OFF • EE (Recorder set) • STOP (Player set)	◎TP16 : 2E ◎TP17 : 2E ◎TP9 (TRIG) : 7B ⓣ VR9 : 3E ☆ TP16 = TP17 (DC level)	1) Measure the voltage of TP16 and TP17 using digital voltmeter. 2) Adjust VR9 to equalize DC levels (1.60 to 1.70 Vdc) at TP16 and TP17.
2	Channel difference adjustment for RF output	• Oscilloscope • Alignment tape MS-1 color bar	• PB	◎TP1 : 11I ◎TP9 (TRIG) : 7B ⓣ VR1 : 12I (CH BAL) ☆ CH1 = CH2	1) While switching the oscilloscope's slope between positive and negative, adjust VR1 to remove difference between the two channels.
3	FILTER input level adjustment	• Oscilloscope • Alignment tape MS-1 color bar	• PB	◎TP1 : 11I ◎TP9 (TRIG) : 7B ⓣ VR2 : 10F (FIL LEV) ☆ 0.4 Vp-p	**Note:** Use 300MHz oscilloscope foy this adjustment . 1) Adjust VR2 so that higher channel RF level becomes 0.4 Vp-p.
4	1+D adjustment	• Oscilloscope • Component color-bar signal	• TEST mode [6F] RF CLK 1/2 (M) • REC ↓ PB (Recorder set)	◎TP17 : 3E ◎TP9 (TRIG) : 11I ⓣ VR6, VC1 : 3G ☆ Minimum	1) Activate TEST mode No. 6F and press the [COUNTER RESET] button. 2) Enter the VTR into REC mode. (24.75 MHz signal will be recorded.) 3) Play back the recorded portion. Color-bar signal is not reproduced in this playback picture. 4) Adjust VR6 and VC1 alternately so that the level of 24.75 MHz (40 nsec) signal that is appeared mixed with nois signal is minimum. **Note:** When the player set needs this adjustment, play back the recorded tape with the recorder set since it is equipped with no test mode [6F].
5	Frequency response adjustment	• Oscilloscope • Alignment tape MS-1 color bar	• PB	◎TP3 : 8I ◎TP9 (TRIG) : 7B ⓣ VR3, VR4 : 9I ☆ 0.7 Vpc	1) Adjust VR3 and VR4 alternately until the level at TP3 becomes 0.7 Vpc.

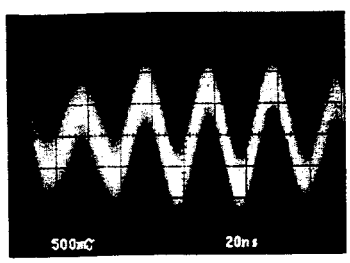

NG

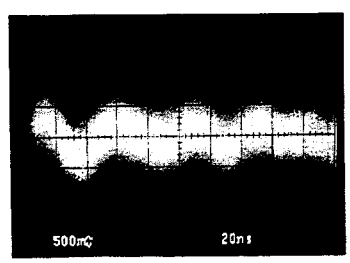

OK

No.	Item	Measuring instruments & Input signals	Mode	Measuring point (◎) Adjustment parts (ⓣ) Adjustment level (☆)	Adjustment procedure
6	Error rate adjustment	• Frequency counter • Alignment tape MS-1 color bar	• PB	◎TP38 : 13I ◎TP9 (TRIG) : 7B ⓣVR7 : 41, VR8 : 31 VR11 : 4E ☆TP38 ≦ 300Hz	1) Connect a frequency counter to TP38. Adjust VR7, VR8 and VR11 repeatedly until the frequency counter reads 300 Hz or lower. After this adjustment, again confirm the frequency response (preceding item No. 5). 2) In case of the player set, adjust this item more precisely with 1 kHz sine wave input to TP48.
7	PLL lock adjustment	• Digital voltmeter • Alignment tape MS-1 color bar	• PB	◎TP22 : 2H ⓣVR10 : 3I	1) While turning VR10 gradually from the minimum position to turn voltage up, note the voltage when the green LED on the board goes on as "voltage A". 2) Next, while turning VR10 gradually from the maximum position to turn voltage down, note the voltage when the green LED on the board goes on as "voltage B". 3) Adjust VR10 to obtain an intermediate voltage between "voltage A" and "voltage B".
8	SEARCH/ STILL mode check	• LED on the board • Alignment tape MS-1 color bar	• SEARCH STILL	—	1) Enter the VTR into the SEARCH mode and play the alignment tape MSHV-1. 2) Confirm that the green LED on the board is on. If the green LED is not turned on, repeat the preceding item No. 5 "Frequency response adjustment". 3) Next, enter the VTR into the STILL mode. 4) Confirm that the green LED on the board is still on. If the green LED is flickering on not turned on, repeat the preceding item No. 5 "Frequency response adjustment".

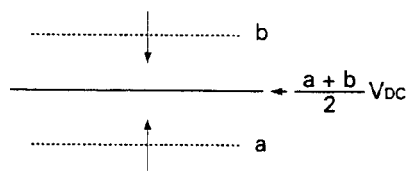

Fig. 3-3-1

No.	Item	Measuring instruments & Input signals	Mode	Measuring point (◎) Adjustment parts (ⓣ) Adjustment level (☆)	Adjustment procedure

3.4 ADJUSTMENT OF REC/ITI CIRCUIT

Note: This adjustment applies to the recorder set only.

1	REC current adjustment	• Internal color-bar or component color-bar signal	• TEST mode [72] RF REC C & F (A) • REMOTE SW : 9 PIN • Menu swith No. 005 AUTO TRACKING :ON	◎ Counter display ⓣ [COUNTER RESET] button ☆ Automatic adjustment	1) Activate TEST mode No. 72. 2) Enter the VTR into the STOP mode with a recording tape being inserted. 3) Press the [COUNTER RESET] button. 4) With a message "P****" appearing on the counter display, automatic adjustment starts inside the VTR. **Note:** Don't touch any operation button during automatic adjustment. For discontinuing automatic adjustment forcibly, press the [COUNTER RESET] button. 5) With a message "END**" appearing on the counter display, automatic adjustment is complete. 6) If a message "ERR**" appears on the display, the VTR fails in automatic adjustment. In such an event, press the [COUNTER RESET] button again to try to make a fresh start of automatic adjustment.
	NOTE: • If the REMOTE switch is not set to the 9-PIN position, it brings this adjustment to an incorrect result. • If adjustment of the RF PROCESS circuit is incomplete, it brings this adjustment to an incorrect result.				
2	ITI output level adjustment	• Alignment tape MS-1color bar	• Menu swith No. 005 AUTO TRACKING : ON • PB	◎ TP35 (RF PROCESS 1) ◎ TP9 (TRIG.RF PROCESS 1) ⓣ VR8 ☆ 1.3VDC	**Note:** This adjustment must be carried out prior to the Step 8) "Linearity cheek" of the section "2.10.1.3 Adjustment of take-up guide rollr." 1) Adjust VR8 so that the DC level becomes 1.3 VDC.

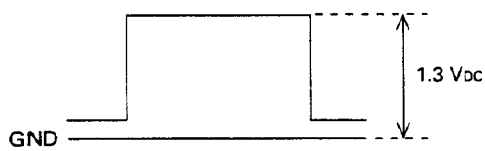

Fig. 3-4-1

3.5 ADJUSTMENT OF OUT MEN CIRCUIT

1	Component/ composite color output level adjustment	• Oscilloscope • TEST mode 100% marker • Alignment tape MSHV-1	• TEST mode [78] LEVEL MARK1 (M) • PB	◎ TP2 : 17B ◎ TP4 : 17B ⓣ VR1 : 15E (C LEV) ☆ TP4 = TP2	1) Connect oscilloscope's probes to TP2 and TP4. 2) While setting either channel of oscilloscope for inversional input, set the oscilloscope for ADD mode of 50 mV/div (even range) for both channels. 3) Enter the VTR into TEST mode No. 78, and press the [COUNTER RESET] button. 4) Adjust VR1 to equalize the level of TP4 signal with that of TP2 signal (to make waveform flat). • Setting of the oscilloscope One channel inverted ADD mode 20MHz filter ON

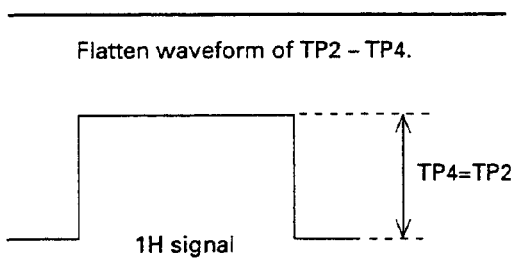

Fig. 3-5-1

No.	Item	Measuring instruments & Input signals	Mode	Measuring point (◎) Adjustment parts (ⓣ) Adjustment level (☆)	Adjustment procedure

3.6 ADJUSTMENT OF OUT/GEN CIRCUIT

Note: The item No. 4 "component setup level adjustment" and following items must be adjusted after completion of "3.7 ADJUSTMENT OF OUT ENC CIRCUIT".

1	Color error voltage adjustment	• Digital voltmeter • Composite color-bar signal ↓ REF IN	• STOP	◎TP13 : 18J ◎TP354 (GND) : 10J ⓣVR3 : 18J (CERR DC) ☆3.2 Vdc	1) Adjust VR3 to obtain 3.2 Vdc at the measurement point.
2	INT H adjustment	• Vectorscope • Color-bar signal ↓ REF IN of vectorscope • Alignment tape MS-1color bar	• PB	◎LINE-1 OUT ⓣVR301 : 9J (INT H)	1) With input of the color-bar signal to vectorscope's REF IN, set the vectorscope reference to the reference input. 2) Make the VTR's REF IN terminal open. 3) Connect vectorscope to the LINE-1 OUT terminal. 4) Adjust VR3Q1 so that turnaround frequency of vectorscope indication becomes minimum (less than 5 times per second).
3	Composite color level adjustment	• Vectorscope • Alignment tape MS-1 color bar	• PB	◎LINE-1 OUT (with 75Ω terminator) ⓣVR608 : 8J (CPSC LEV) ☆0.286 Vp-p	1) While inputting the composite color-bar signal directly to the vectorscope, adjust the GAIN control so that the spot of burst signal is positioned on the circumference scale on the vectorscope screen. 2) Connect vectorscope to the LINE-1 OUT terminal. 3) Play back the alignment tape MS-1 color bar, adjust VR608 so that the spot of burst signal is positioned on the circumference of the vectorscope screen (0.286 Vp-p).
4	Component Setup level adjustment	• Oscilloscope • Alignment tape MS-1 color bar	• PB	◎COMPONET Y OUT (with 75Ω terminator) ⓣVR2:15J (SET UP LEV) ☆52.5 ± 2.5mV	1) Adjust VR2 so that the set up level becoms 52.5 ± 2.5mV.

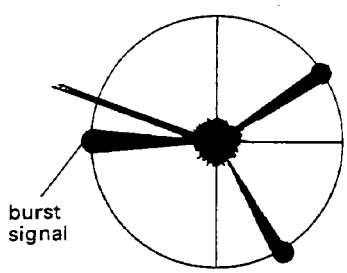

Vectorscope

Fig. 3-6-1

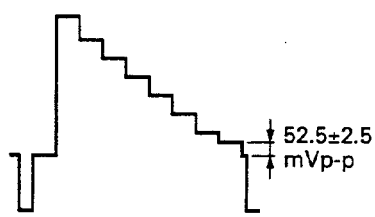

Fig. 3-6-2

Note:

VR2 in both the BR-D80U and BR-D50U has been changed to VR303 in the sets whose serial numbers are respectively as follows.

BR-D80U : XXXXX100 and after

BR-D50U : XXXXXX80 and after

No.	Item	Measuring instruments & Input signals	Mode	Measuring point (◎) Adjustment parts (ⓣ) Adjustment level (☆)	Adjustment procedure
5	Component Y level adjustment	• Oscilloscope • TEST mode 100% marker	• TEST mode [78] LEVEL MARK1 (M) • STOP	◎ COMPONENT Y OUT (with 75Ω terminator) ⓣ VR607 : 6J (CPNY LEV) ☆ 0.7 Vp-p	1) Activate TEST mode No. 78 and press the [COUNTER RESET] button. 2) Adjust VR607 so that the marker level becomes 0.7 Vp-p.
6	Y/C Y level adjustment	• Oscilloscope • TEST mode 100% marker	• TEST mode [78] LEVEL MARK1 (M) • STOP	◎ Y/C Y OUT (with 75Ω terminator) ⓣ VR606 : 6J (YC Y LEV) ☆ 0.714 Vp-p (100IRE)	1) Activate TEST mode No. 78 and press the [COUNTER RESET] button. 2) Adjust VR606 so that the marker level becomes 0.714 Vp-p.
7	LINE Y level adjustment	• Oscilloscope • Black burst signal	• TEST mode [7E] BLACK BURST (M) • STOP	◎ LINE-1 OUT (with 75Ω terminator) ⓣ VR605 : 5J (CPSY LEV) ☆ 0.714 Vp-p (100IRE)	1) Activate TEST mode No. 7E and press the [COUNTER RESET] button. 2) Adjust VR605 so that the marker level becomes 0.714 Vp-p.

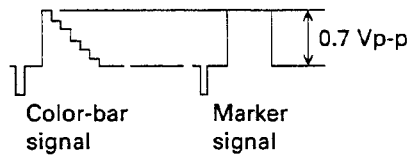

Fig. 3-6-3

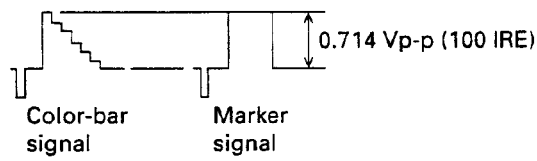

Fig. 3-6-4

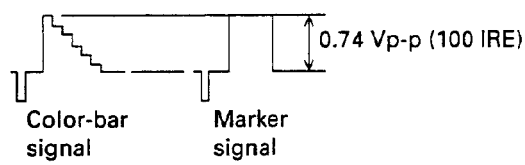

Fig. 3-6-5

No.	Item	Measuring instruments & Input signals	Mode	Measuring point (◎) Adjustment parts (ⓣ) Adjustment level (☆)	Adjustment procedure
8	SYNC level adjustment	• Oscilloscope • Alignment tape MS-1 color bar	• PB	◎ COMPONENT Y OUT (with 75Ω terminator) ⓣ VR302 : 9J (SY LEV) ☆ 0.3 Vp-p	1) Adjust VR302 so that SYNC level becomes 0.3 Vp-p.
9	SYNC phase adjustment	• Oscilloscope • Alignment tape MS-1 color bar	• TEST mode [7B] Y TIMING (M) • PB	◎ COMPONENT Y OUT ⓣ S301 : 14J	1) Set S301 to "0" position. 2) Input component color-bar signal to a oscilloscope. 3) Set the rise point of Y signal at an optional position on the oscilloscope. 4) Connect the oscilloscope to the COMPONENT Y OUT terminal. 5) Activate TEST mode No. 7B and press the [COUNTER RESET] button. 6) Play the alignment tape MS-1 color bar. 7) Turn the JOG dial to set the rise point of Y signal at the same point as the preceding step 3). 8) Fine adjust the rise point of Y signal with S301. 9) After the above adjustment is complete, press the [SELECT] button to fix the adjustment value.
10	SYSTEM phase adjustment	• Oscilloscope • Alignment tape MS-1 color bar • color bar ↓ REF IN	• PB	◎ LIINE-1 OUT ⓣ SYSTEM PHASE VR (Front sub-panel)	1) Connect oscilloscope to the LINE-1 OUT and REF IN terminals in through-out connection, and set the oscilloscope to CHOP mode. 2) Adjust the SYSTEM PHASE VR on the front sub-panel so that LINE-1 OUT and REF IN signals correspond to each other in the sync phase.
11	SC phase adjustment	• Oscilloscope • Alignment tape MS-1 color bar • color bar ↓ REF IN	• PB	◎ LINE-1 OUT ⓣ SC PHASE VR (Front sub-panel)	1) Connect oscilloscope to the LINE-1 OUT and REF IN terminals in through-out connection and set the oscilloscope to CHOP mode. 2) Adjust the SC PHASE VR on the front sub-panel so that LINE-1 OUT and REF IN signals correspond to each other in the SC phase.

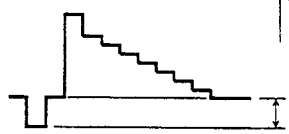

Fig. 3-6-6

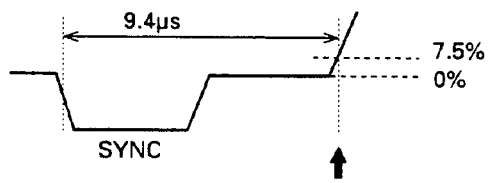

Fig. 3-6-7

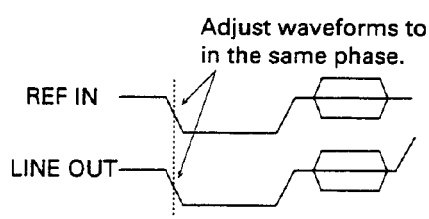

Fig. 3-6-8

No.	Item	Measuring instruments & Input signals	Mode	Measuring point (◎) Adjustment parts (ⓣ) Adjustment level (☆)	Adjustment procedure

3.7 ADJUSTMENT OF OUT ENC CIRCUIT

1	Component Y signal frequency response adjustment	• Oscilloscope • Alignment tape MS-1 multiburst	• PB	◎ COMPONENT Y OUT ⓣ VC1 : 9J (Y FRQ) ☆ Same amplitude	1) Adjust VC1 to equalize 4 MHz signal level with 500 kHz signal level.
2	Component signal output delay adjustment	• Oscilloscope • Alignment tape MS-1 bowtie	• TEST mode [7C] CPN C TIMING (M) • PB	◎ R-Y OUT ◎ B-Y OUT ◎ COMPONENT Y OUT ⓣ VR5 : 6J (CPNR DL) ⓣ VR8 : 8J (CPNB DL)	1) Activate TEST mode No. 7C and press the [COUNTER RESET] button. 2) Connect the oscilloscope's CH-1 with the COMPONENT Y OUT terminal while connecting its CH-2 with the R-Y OUT (B-Y OUT) terminal, and set the oscilloscope for the ADD mode with the same range for both the channels. Set its CH-2 to INV. mode. 3) Play the alignment tape MS-1 bowtie. 4) Turn the JOG dial so that crossover point of the signals approximately correspond to the center marker. 5) Fine adjust the crossover point with VR5 (R-Y) and VR8 (B-Y). 6) When the adjustment is complete, press the [SELECT] button to fix the adjustment value.
3	R-Y frequency response adjustment	• Oscilloscope • Alignment tape MS-1 multiburst	• PB	◎ R-Y OUT ⓣ VC3 : 6J (CPNR FREQ) ☆ Same amplitude	1) Adjust VC3 to equalize 2 MHz signal level with 500 kHz signal level.

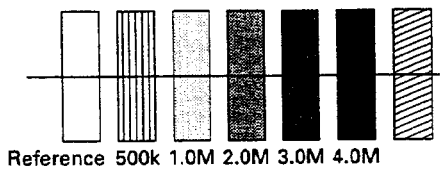

Fig. 3-7-1

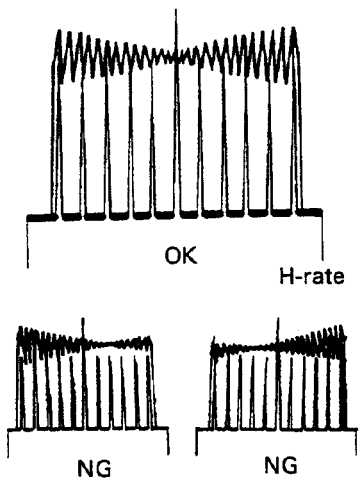

Fig. 3-7-2

• Setting of oscilloscope
Time sweep : 10 μs/div
Range : 0.2 V/div (CH-1, CH-2)
CH-2 : inverted

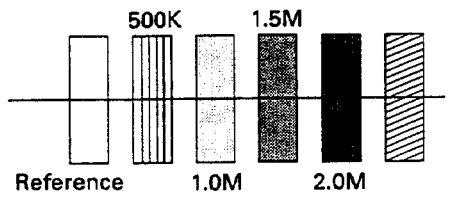

Fig. 3-7-3

No.	Item	Measuring instruments & Input signals	Mode	Measuring point (◎) Adjustment parts (ⓣ) Adjustment level (☆)	Adjustment procedure
4	B-Y frequency response adjustment	• Oscilloscope • Alignment tape MS-1 multiburst	• PB	◎ B-Y OUT ⓣ VC4 : 7J (CPNB FREQ) ☆ Same amplitude	1) Adjust VC4 to equalize 2 MHz signal level with 500 kHz signal level.
5	R-Y level adjustment	• Oscilloscope • TEST mode 100% marker	• TEST mode [78] LEVEL MARK1 (M) • STOP	◎ R-Y OUT (with 75Ω terminator) ⓣ VR3 : 5J (CPNR LEV) ☆ 0.324±0.015 Vp-p	1) Activate TEST mode No. 78 and press the [COUNTER RESET] button. 2) Adjust VR3 so that the marker level becomes 0.324 ± 0.015 Vp-p.
6	B-Y level adjustment	• Oscilloscope • TEST mode 100% marker	• TEST mode [78] LEVEL MARK1 (M) • STOP	◎ B-Y OUT (with 75Ω terminator) ⓣ VR6 : 7J (CPNB LEV) ☆ 0.324±0.015 Vp-p	1) Activate TEST mode No. 78 and press the [COUNTER RESET] button. 2) Adjust VR6 so that the marker level becomes 0.324 ± 0.015 Vp-p.
7	Y/C color burst level adjustment	• Vectorscope • Black burst signal	• TEST mode [7E] BB OUT & MARK (M) • STOP	◎ Y/C C OUT (with 75Ω terminator) ◎ Y/C Y OUT ↓ EXT. REF IN (Vectorscope) ⓣ VR303 : 15J (BST BAL) ⓣ VR304 : 16J (BST LEV) ☆ 0.286 Vp-p	1) Activate TEST mode No. 78 and press the [COUNTER RESET] button. 2) While inputting the composite color-bar signal directly to the vectorscope, adjust the GAIN control so that the spot of burst signal is positioned on the circumference scale on the vectorscope screen. 3) In the condition of above step 2), connect the vectorscope with the Y/C C OUT terminal. 4) Adjust VR303 to center the spot on the vectorscope screen. 5) Adjust VR304 so that spot of burst signal corresponds to the circumference of the vectorscope.

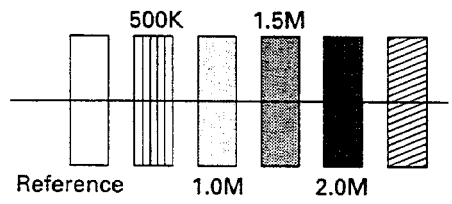

Fig. 3-7-4

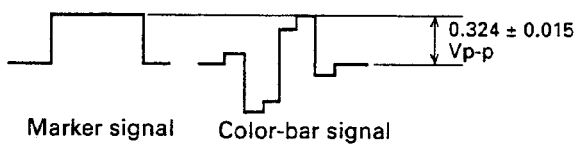

Fig. 3-7-5

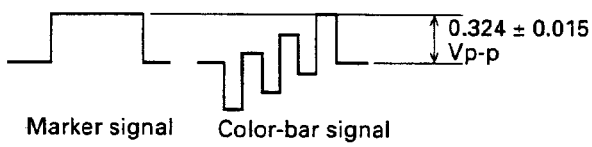

Fig. 3-7-6

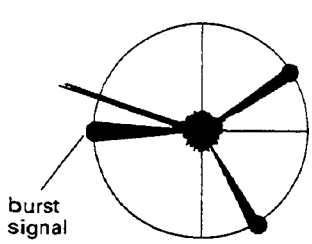

Fig. 3-7-7

No.	Item	Measuring instruments & Input signals	Mode	Measuring point (◎) Adjustment parts (ⓣ) Adjustment level (☆)	Adjustment procedure
8	Y/C color output level adjustment	• Vectorscope • Alignment tape MS-1 color bar	• PB	◎ Y/C OUT (with 75Ω terminator) ◎ Y/C Y OUT ↓ EXT. REF IN (Vectorscope) ⓣ VR11 : 10J (R-Y BAL) ⓣ VR13 : 14J (B-Y BAL) ⓣ VR9 : 9J (CPSR LEV) ⓣ VR12 : 13J (CPSB LEV) ⓣ VR302 : 14J (HUE)	1) As vectorscope's gain is raised, adjust VR11 and VR13 to converge spots at the center of vectorscope screen. 2) Adjust the vectorscope's GAIN control to set burst signal at the normal position. 3) Adjust VR9, VR12 (LEVEL) and VR302 (PHASE) to position each bright spot in a marking " ⊞ " corresponding to it on the vectorscope screen.
		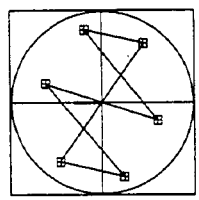 **Fig. 3-7-8**			
9	Y/C color delay adjustment	• Oscilloscope • Alignment tape MS-1 pulse & bar	• TEST mode [7D] CPSC TIMING (M) • PB	◎ Y/C Y OUT ◎ Y/C C OUT ⓣ VR301 : 15J (ENCC DL) ⓣ VR10 : 10J (CPSR DL) ☆ Flat	1) Turn VR301 fully clockwise. 2) Set the DIP switch 1-1 to OFF and set 1-2 to ON. 3) Connect oscilloscope to the Y/C Y OUT and Y/C C OUT terminals, and set the oscilloscope for ADD mode. 4) Activate TEST mode No. 7D and press the [COUNTER RESET] button. 5) Adjust Y/C delay waveform to be nearly flat with the JOG dial first, then adjust it precisely with VR301. After adjustment, press the [SELECT] button to fix the adjustment value. 6) Set the DIP switch 1-1 to ON and set 1-2 to OFF. 7) Connect oscilloscope to the Y/C Y OUT and Y/C C OUT terminals, and set the oscilloscope for ADD mode. 8) Adjust VR10 so that Y and C signal correspond to each other in the delay timing. 9) Reset the DIP switch 1-1 and 1-2 to ON.
		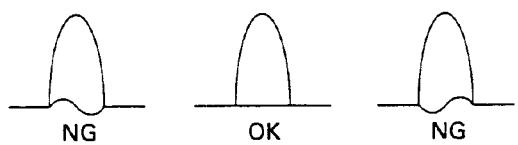 NG OK NG **Waveform of 12.5T portion** **Fig. 3-7-9** • Setting of oscilloscope 0.2 V/div. for input of Y/C Y OUT signal 0.1 V/div. for input of Y/C C OUT signal			
10	On-screen character position adjustment	• Video monitor • Alignment tape MS-1 color bar	• PB • COUNTER SW : CTL	◎ VIDEO MONITOR OUT ☆ VR801	1) Adjust VR801 so that the left edge of "C" in "CTL" is just in the border between cyan and green.
		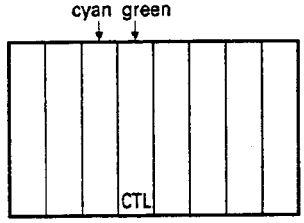 cyan green CTL **Adjust the character position so that the left edge of "C" in "CTL" is put in the border between cyan and green.** **Fig. 3-7-10**			

No.	Item	Measuring instruments & Input signals	Mode	Measuring point (◎) Adjustment parts (ⓟ) Adjustment level (☆)	Adjustment procedure

3.8 ADJUSTMENT OF ANA IN CIRCUIT

Note: This adjustment applies to the recorder set only.

1	Phase shift adjustment	• Oscilloscope • Alignment tape MS-1 color bar • Component color-bar signal	• PB • EE	◎ COMPONENT Y OUT ⓟ VR604 : 18J (PS DC)	1) Play the alignment tape MS-1 color bar. 2) Set the rise point of the Y signal at an optional position on the screen of oscilloscope that is connected with the COMPONENT Y OUT terminal. 3) Enter the VTR into EE mode. 4) Adjust VR604 so that the rise point of the component Y signal output in the EE mode is positioned at the same point as the above step 2).
2	Component Y input level adjustment	• Oscilloscope • Component color-bar signal • TEST mode 100% marker	• TEST mode [78] LEVEL MARK1 (M) • EE	◎ COMPONENT Y OUT (with 75Ω terminator) ⓟ VR303 : 10J (Y LEV) ⓟ VR601 : 18J (CP Y) ⓟ 52.5±2.5 mV (setup) (☆ 0.7 Vp-p (LEVEL))	1) Activate TEST mode No. 78 and press the [COUNTER RESET] button. 2) Adjust VR303 so that the 100% white corresponds to the maker. 3) Adjust VR601 so that the setup level becomes 52.5 ± 2.5 mV.
3	YC delay adjustment for R-Y input	• Oscilloscope • Component bowtie signal	• EE	◎ R-Y OUT ◎ COMPONENT Y OUT ⓟ VR307 : 13E (R DL)	1) Connect the oscilloscop's CH-1 with the COMPONENT Y OUT terminal while connecting its CH-2 with the R-Y OUT terminal, and set the oscilloscope for the ADD mode with the same range for both the channels. Set its CH-2 to INV. mode. 2) Adjust VR307 so that crossover point of the signal is positioned at the center marker.(See Fig. 3-8-3)
4	YC delay adjustment for B-Y input	• Oscilloscope • Component bowtie signal	• EE	◎ B-Y OUT ◎ COMPONENT Y OUT ⓟ VR304 : 13F (B DL)	1) Connect the oscilloscop's CH-1 with the COMPONENT Y OUT terminal while connecting its CH-2 with the B-Y OUT terminal, and set the oscilloscope for the ADD mode with the same range for both the channels. Set its CH-2 to INV. mode. 2) Adjust VR304 so that crossover point of the signal is positioned at the center marker. • Setting of oscilloscope Time sweep : 10 µs/div Range : 0.2 V/div (CH-1, CH-2) CH-2 inverted

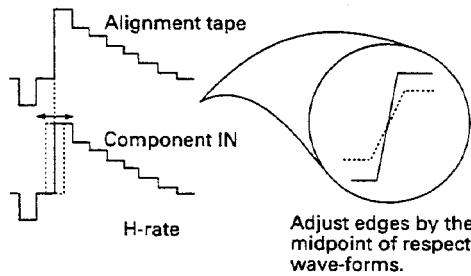

Fig. 3-8-1

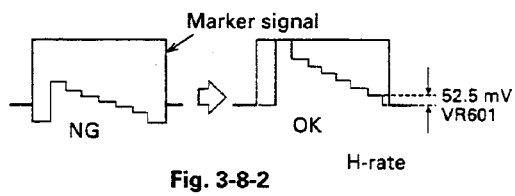

Fig. 3-8-2

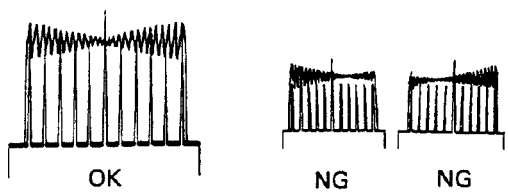

Fig. 3-8-3

No.	Item	Measuring instruments & Input signals	Mode	Measuring point (◎) Adjustment parts (ⓣ) Adjustment level (☆)	Adjustment procedure
5	Component R-Y input level adjustment	• Oscilloscope • Component color-bar signal • TEST mode 100% marker	• TEST mode [78] LEVEL MARK1 (M) • EE	◎ R-Y OUT (with 75Ω terminator) ⓣ VR301 : 9J (R LEV) ⓣ VR602 : 16J (CP R) (☆ 0.647 Vp-p)	1) Activate TEST mode No. 78 and press the [COUNTER RESET] button. 2) Adjust the level (with VR301) and pedestal (with VR602) of the component signal so that the component signal corresponds to the marker. **Note:** For the above specification, it is prerequisite to input component color-bar signal of 100 % color and 7.5 % setup level. If color-bar signal of 75 % color and 7.5 % setup level is used as input signal, adjust the level to 0.486 Vp-p.
6	Component B-Y input level adjustment	• Oscilloscope • Component color-bar signal • TEST mode 100% marker	• TEST mode [78] LEVEL MARK1 (M) • EE	◎ B-Y OUT (with 75Ω terminator) ⓣ VR302 : 10J (B LEV) ⓣ VR603 : 15J (CP B) (☆ 0.647 Vp-p)	1) Activate TEST mode No. 78 and press the [COUNTER RESET] button. 2) Adjust the level (with VR302) and pedestal (with VR603) of the component signal so that the component signal corresponds to the marker. **Note:** For the above specification, it is prerequisite to input component color-bar signal of 100 % color and 7.5 % setup level. If color-bar signal of 75 % color and 7.5 % setup level is used as input signal, adjust the level to 0.486 Vp-p.
7	VITC SEP DC level adjustment	• Oscilloscope • Component color-bar signal	• EE	◎ TP310 : 12B ◎ TP311 : 12C ⓣ VR308 : 12C (VITC DC) (☆ 0.7 Vp-p(level))	1) Connect oscilloscope's probes to TP310 and TP311, and set the oscilloscope for CHOP mode and DC coupling mode respectively. 2) Adjust VR308 so that TP310's DC level appears at the same point as 50 % of TP311's Y signal (pedestal to 100 % white).

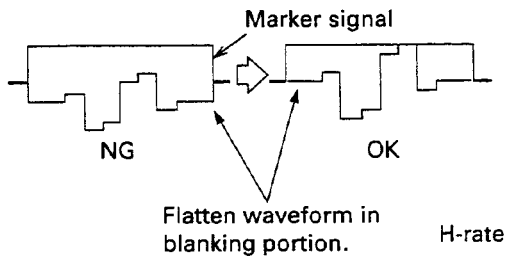

Fig. 3-8-4

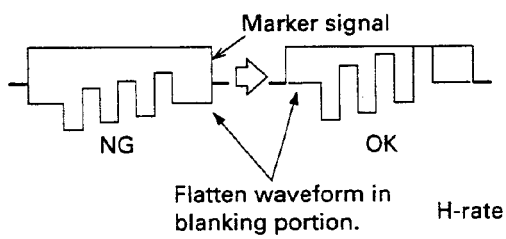

Fig. 3-8-5

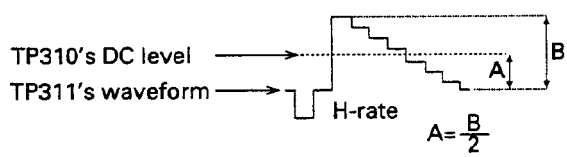

Fig. 3-8-6

• Setting of oscilloscope : 50 mV/div
GND level of both channel are the first graduation from the top.

No.	Item	Measuring instruments & Input signals	Mode	Measuring point (◎) Adjustment parts (ⓣ) Adjustment level (☆)	Adjustment procedure
8	C. DET adjustment	• Oscilloscope • No signal	• EE	◎ TP16 : 6D ⓣ VR4 : 6D (C DET) ☆ 2.3 VDC	1) Adjust VR4 so that level at TP16 becomes 2.3 VDC.
9	Decoder error voltage adjustment	• Oscilloscope • Color-bar signal ↓ Y/C IN	• EE	◎ TP14 : 4E ◎ LINE-1 OUT (TRIG.) ⓣ VC1 : 6D	1) Adjust VC1 to color the monitor screen as well as to minimize waveform.
		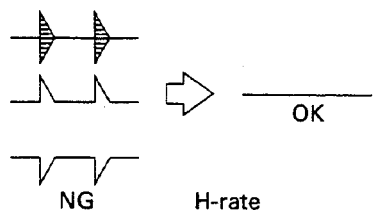 **Fig. 3-8-7**			
10	Y/C Y input level adjustment	• Oscilloscope • TEST mode 100% marker • Color-bar signal ↓ Y/C IN	• TEST mode [78] LEVEL MARK1(M) • EE	◎ COMPONENT Y OUT (with 75Ω terminator) ⓣ VR3 : 4J (YC Y LEV) (☆ 0.7 Vp-p)	1) Activate TEST mode No. 78 and press the [COUNTER RESET] button. 2) Adjust VR3 so that the component signal corresponds to the marker.
		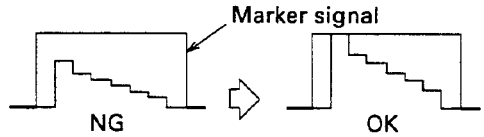 **Fig. 3-8-8**			
11	Y/C input, R-Y blanking adjustment	• Oscilloscope • Color-bar signal ↓ Y/C IN	• EE	◎ TP21 : 7F ◎ R-Y OUT ⓣ VR7 : 8J (HUE OF S1) ⓣ VR8 : 8J (HUE OF S2) ⓣ VR10 : 7J (R BLK)	1) Turn VR7 full clockwise. 2) Adjust VR8 to flatten TP21's waveform. (Rough adjustment) 3) Adjust VR10 so that output signal from the R-Y OUT becomes flat in the blanking portion.
		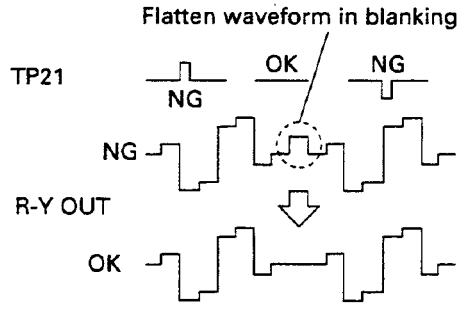 **Fig. 3-8-9**			

No.	Item	Measuring instruments & Input signals	Mode	Measuring point (◎) Adjustment parts (ⓣ) Adjustment level (☆)	Adjustment procedure
12	Y/C input, B-Y blanking adjustment	• Oscilloscope • Color-bar signal ↓ Y/C IN	• EE	◎ B-Y OUT ⓣ VR9 : 8J (B BLK)	1) Adjust VR9 so that output signal from the B-Y OUT becomes flat in the blanking portion.
13	Y/C input, R-Y YC delay adjustment	• Oscilloscope • Color-bar signal ↓ Y/C IN	• EE	◎ R-Y OUT ◎ COMPONENT Y OUT ⓣ VR306 : 13D (YC R DL)	1) Connect oscilloscope to the Y-OUT and R-Y OUT, and set the oscilloscope to CHOP mode. 2) Adjust VR306 so that the Y-OUT signal and R-Y OUT signal are equivalent to each other in their edges.
14	Y/C input, B-Y YC delay adjustment	• Oscilloscope • Color-bar signal ↓ Y/C IN	• EE	◎ B-Y OUT ◎ COMPONENT Y OUT ⓣ VR305 : 13F (YC B DL)	1) Connect oscilloscope to the Y-OUT and B-Y OUT, and set the oscilloscope to CHOP mode. 2) Adjust VR305 so that the Y-OUT signal and B-Y OUT signal are equivalent to each other in their edges. (See Fig. 3-8-11)
15	Y/C input, R-Y level adjustment	• Oscilloscope • TEST mode 100% marker • Color-bar signal ↓ Y/C IN	• TEST mode [78] LEVEL MARK1 (M) • EE	◎ R-Y OUT (with 75Ω terminator) ⓣ VR5 : 6J (DEC R LEV) (☆ 0.647 Vp-p)	1) Activate TEST mode No. 78 and press the [COUNTER RESET] button. 2) Adjust VR5 so that the R-Y signal corresponds to the marker. **Note:** For the above specification, it is prerequisite to input component color-bar signal of 100 % color and 7.5 % setup level. If color-bar signal of 75 % color and 7.5 % setup level is used as input signal, adjust the level to 0.486 Vp-p.

Flatten waveform in blanking portion.

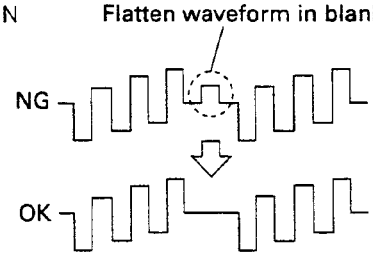

Fig. 3-8-10

Make these edges corresponding to each other.

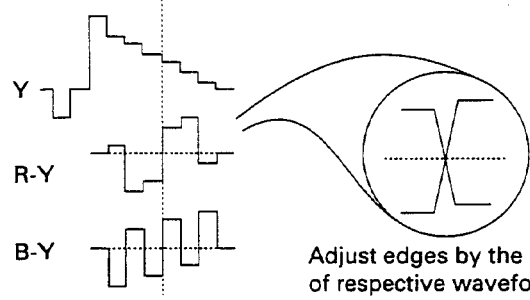

Adjust edges by the midpoint of respective waveforms.

Fig. 3-8-11

Marker signal

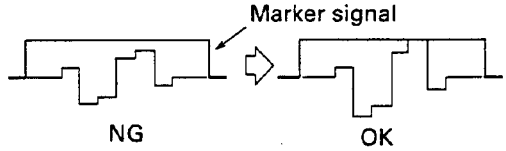

Fig. 3-8-12

No.	Item	Measuring instruments & Input signals	Mode	Measuring point (◎) Adjustment parts (ⓣ) Adjustment level (☆)	Adjustment procedure
16	Y/C input, B-Y level adjustment	• Oscilloscope • TEST mode 100% marker • Color-bar signal ↓ Y/C IN	• TEST mode [78] LEVEL MARK1(M) • EE	◎ B-Y OUT (with 75Ω terminator) ⓣ VR6 : 7J (DEC B LEV) (☆ 0.647 Vp-p)	1) Activate TEST mode No. 78 and press the [COUNTER RESET] button. 2) Adjust VR6 so that the B-Y signal corresponds to the marker. **Note:** For the above specification, it is prerequisite to input component color-bar signal of 100 % color and 7.5 % setup level. If color-bar signal of 75 % color and 7.5 % setup level is used as input signal, adjust the level to 0.486 Vp-p.
17	Decoder HUE adjustment	• Vectorscope • Color-bar signal ↓ Y/C IN	• EE	◎ LINE-1 OUT (with 75Ω terminator) ⓣ VR8 : 9J (HUE OF S2)	1) Adjust VR8 so that every bright spot is positioned in a box marking" ⊞ " corresponding to it.
18	LINE input, Y level adjustment	• Oscilloscope • TEST mode 100% marker • Color-bar signal ↓ LINE IN	• TEST mode [78] LEVEL MARK1 (M) • EE	◎ COMPONENT Y O (with 75Ω terminator) ⓣ VR2 : 6J (COMB Y) (☆ 0.7 Vp-p)	1) Activate TEST mode No. 78 and press the [COUNTER RESET] button. 2) Adjust VR2 so that the component signal corresponds to the marker.
19	LINE input, color level adjustment	• Oscilloscope • Color-bar signal ↓ LINE IN	• TEST mode [78] LEVEL MARK1 (M) • EE	◎ R-Y OUT (with 75Ω terminator) ⓣ VR1 : 5J (COMB C) (☆ 0.647 Vp-p)	1) Activate TEST mode No. 78 and press the [COUNTER RESET] button. 2) Adjust VR1 so that the R-Y signal corresponds to the marker. **Note:** For the above specification, it is prerequisite to input component color-bar signal of 100 % color and 7.5 % setup level. If color-bar signal of 75 % color and 7.5 % setup level is used as input signal, adjust the level to 0.486 Vp-p.

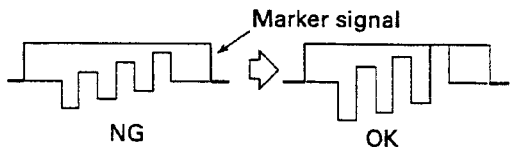

Fig. 3-8-13

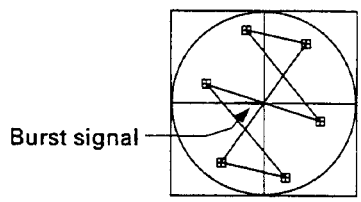

Fig. 3-8-14

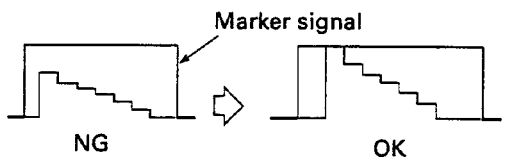

Fig. 3-8-15

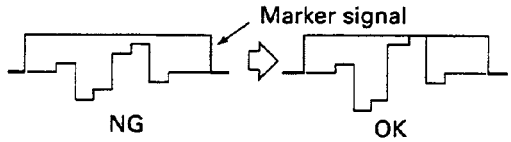

Fig. 3-8-16

No.	Item	Measuring instruments & Input signals	Mode	Measuring point (◎) Adjustment parts (ⓣ) Adjustment level (☆)	Adjustment procedure

3.9 ADJUSTMENT OF AUDIO CIRCUIT

1	Audio LINE output level adjustment	• Audio tester • Alignment tape MS-1 (1 kHz digital audio segment)	• TEST mode [50] AU LINE OUT LV. (M) • PB • AUDIO OUT LEVEL SW (Rear panel) +4 dB • AUDIO MONITOR SWITH :DA1 or DA2	◎ AUDIO OUT ⓣ [COUNTER RESET] button ⓣ JOG dial ☆ +4 dBs	1) Connect an audio tester to the AUDIO OUT DA1 (or DA2). 2) Activate TEST mode No. 50. 3) Press the [COUNTER RESET] button, and the VTR enters the manual adjustment mode. 5) Set the AUDIO MONITOR switch to DA1 (or DA2). **Note:** If the AUDIO MONITOR switch is set wrong, the [JOG] dial cannot bring satisfactory result in adjustment. 6) Adjust output level to be +4 dBs with the [JOG] dial. 7) Press the [SELECT] button to fix the adjustment value.

SECTION 4

DIAGRAMS AND CIRCUIT BOARDS

Table of contents

4.1 REPLACING SUBMINATURE "CHIP" PARTS 4-2
4.2 INDEX TO PAGES OF MAIN BOARDS AND CIRCUIT BOARD LOCATION 4-4
4.2.1 Index to pages of main boards 4-4
4.2.2 Circuit board location 4-5
4.3 PV PRE CIRCUIT BOARD BLOCK DIAGRAM 4-6
4.4 SERVO CIRCUIT BLOCK DIAGRAM 4-7
4.5 REC ITI CIRCUIT BOARD BLOCK DIAGRAM (D85/D80) 4-8
4.6 ANA IN CIRCUIT BOARD BLOCK DIAGRAM (D85/D80) 4-9
4.7 PV PROCESS CIRCUIT BOARD BLOCK DIAGRAMS 4-10
4.8 OUT MEM CIRCUIT BOARD BLOCK DIAGRAM 4-14
4.9 OUT GEN CIRCUIT BOARD BLOCK DIAGRAM 4-15
4.10 OUT ENC CIRCUIT BOARD BLOCK DIAGRAM 4-16
4.11 OPERATION CIRCUIT BOARD BLOCK DIAGRAM 4-17
4.12 RF PROCESS CIRCUIT BLOCK DIAGRAMS 4-18
4.12.1 RF PROCESS-1 CIRCUIT BOARD BLOCK DIAGRAMS 4-18
4.12.2 RF PROCESS-2 CIRCUIT BOARD BLOCK DIAGRAM 4-20
4.13 AUDIO CIRCUIT BLOCK DIAGRAMS 4-21
4.14 SYS/TC CIRCUIT BOARD BLOCK DIAGRAMS 4-24
4.15 OVERALL WIRING DIAGRAMS 4-26
4.16 MOTHER-1 SCHEMATIC DIAGRAMS 4-29
4.17 MOTHER-1 CIRCUIT BOARD 4-33
4.18 MOTHER-2 SCHEMATIC DIAGRAM 4-34
4.19 MOTHER-2 CIRCUIT BOARD 4-35
4.20 PV PRE SCHEMATIC DIAGRAM 4-35
4.21 PV PRE CIRCUIT BOARDS 4-35
4.22 REC/ITI SCHEMATIC DIAGRAM (D85/D80) 4-36
4.23 REC/ITI CIRCUIT BOARDS 4-37
4.24 PV PROCESS SCHEMATIC DIAGRAMS 4-39
4.25 PV PROCESS CIRCUIT BOARDS 4-48
4.26 RF PROCESS-1 SCHEMATIC DIAGRAMS 4-50
4.27 RF PROCESS CIRCUIT BOARDS 4-52
4.28 RF PROCESS-2 SCHEMATIC DIAGRAMS 4-54
4.29 OUT MEM SCHEMATIC DIAGRAMS 4-56
4.30 OUT MEM CIRCUIT BOARDS 4-58
4.31 ANA IN SCHEMATIC DIAGRAMS (D85/D80) 4-59
4.32 ANA IN CIRCUIT BOARDS 4-62
4.33 OUT/GEN SCHEMATIC DIAGRAMS 4-64
4.34 OUT/GEN CIRCUIT BOARDS 4-67
4.35 OUT ENC SCHEMATIC DIAGRAMS 4-69
4.36 OUT ENC CIRCUIT BOARDS 4-71
4.37 ANA AUDIO CIRCUIT BOARDS 4-73
4.38 ANA AUDIO SCHEMATIC DIAGRAMS 4-74
4.39 DIG AUDIO SCHEMATIC DIAGRAMS 4-76
4.40 DIG AUDIO CIRCUIT BOARD 4-79
4.41 AUDIO I/O SCHEMATIC DIAGRAMS 4-80
4.42 AUDIO I/O CIRCUIT BOARD 4-82
4.43 M-CTL/SERVO SCHEMATIC DIAGRAMS 4-83
4.44 M-CTL/SERVO CIRCUIT BOARDS 4-85
4.45 SYS/TC SCHEMATIC DIAGRAMS 4-87
4.46 SYS/TC CIRCUIT BOARDS 4-89
4.47 OPERATION SCHEMATIC DIAGRAM 4-91
4.48 OPERATION CIRCUIT BOARDS 4-92
4.49 REEL MDA SCHEMATIC DIAGRAM 4-94
4.50 REEL MDA CIRCUIT BOARD 4-95
4.51 REAR(REAR-1, REAR-2) SCHEMATIC DIAGRAMS 4-96
4.52 REAR(REAR-1, REAR-2) CIRCUIT BOARDS 4-97
4.53 E. SENS/FLY E SCHEMATIC DIAGRAM 4-99
4.54 E. SENS/FLY E CIRCUIT BOARDS 4-100
4.55 DIG I/O CIRCUIT BOARD BLOCK DIAGRAM (D85) 4-101
4.56 DIG I/O SCHEMATIC DIAGRAM (D85) 4-102
4.57 DIG I/O CIRCUIT BOARD (D85) 4-105
SCHEMATIC DIAGRAM OF ICs IC-1

SECTION 4
DIAGRAMS AND CIRCUIT BOARDS

■ FOREWORD

1. Expression of connector

Connector is expressed in two ways.

1) The following illustrates 'CN2 pin 1' for example.

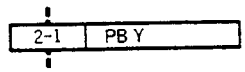

2) The following illustrates 'CN1 pins 1 and 2'.

2. Expression of wiring

As the following circuit diagram is divided to print on some sheets, such an indication as the following is found in the case the wiring extends over two or more divided sections.

1) Circuit diagram divided into two or more sections:

Board	Board Name	Number of divided sections
0 1	MOTHER-1	1/4~4/4
1 2	RF PROCESS-1	1/2~2/2
1 3	PV PROCESS	1/9~9/9
1 4	OUT MEM	1/2~2/2
1 5	ANA IN	1/3~3/3
1 7	OUT GEN	1/3~3/3
1 8	RF PROCESS-2	1/3~3/3
1 9	OUT ENC	1/2~2/2
2 0	ANA AUDIO	1/2~2/2
2 1	DIG AUDIO	1/3~3/3
2 2	AUDIO I/O	1/2~2/2
3 0	M-CTL/SERVO	1/2~2/2
3 1	SYS/TC	1/2~2/2
—	OVER ALL	1/3~3/3

2) Indication of wiring which extends to another section:

(Example)

On the "1/2" diagram of REC/PB Y board, such an indication as the following is found on the "PB (H)" signal line.

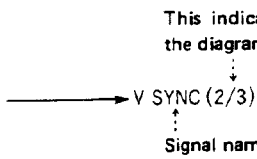

In the above case, the end of the wiring is connected to the "2/2-PB (H)" on the 2nd section of the diagram.

3. Wiring of connector

(Example)

In the above example, CN1 is connected with CN2 on 1 2 SYSCON board.

4. Unit of value

Unless otherwise specified:

1) Resistance is in Ω (1/6 W)
2) Capacitance in μF
3) Inductance in μH
4) Screened parts (in ▒▒) are important for safety assurance. When replacing them, use specified parts.

5. Others

1) Diagrams whose titles are followed by a model number such as BR-D80 or BR-D50 appearing in this section apply to the specified model only. In other words, circuit diagrams, schematic diagrams, board patterns, etc. appearing under such titles are exclusive diagrams for the specified model.
2) There are parts whose symbol numbers or constants are marked up with D80 or D50 in circuit diagrams common to BR-D80 and D50 indicates that the part or constant is used in the specified model only.
3) In regard of a board assembly whose circuit is composed of multi-layered board patterns such as 4- or 6-layered patterns, board patterns of the power supply lines and grounding lines are omitted in this section.

Note: For detail of each electrical part, refer to Section 6 "ELECTRICAL PARTS LIST" by it symbol number.

4.1 REPLACING SUBMINATURE "CHIP" PARTS

1. General description

Some of resistors, variable resistors, shorting jumpers (0 Ω resistors), ceramic capacitors, transistors, diodes are chip parts. Those removed once cannot be used again.

2. Replacement of chip parts

Replacement of chip parts should be performed as follows. Use a soldering iron (17 W for 260–30°C approx.) that has sharp-pointed tip and high performance in insulation.
It is more convenient to use a soldering iron with solder absorber (55 W approx.).

(1) Soldered condition of chip parts

- Resistors, capacitors, etc.

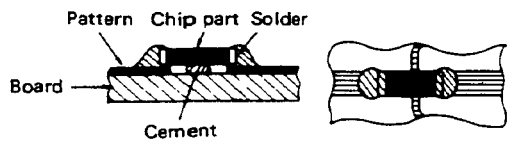

- Transistors, diodes, etc.

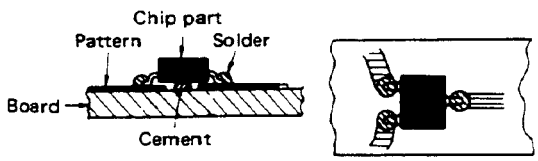

(2) Removing of chip parts

- Resistors, capacitors, etc.

i) Melt solder at a side.

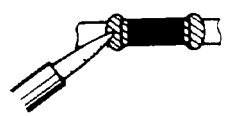

ii) Holding the chip with tweezers, melt solder at the other side.

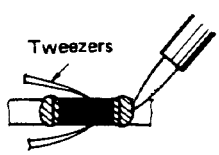

iii) Take off the chip in twisting and sliding motion.

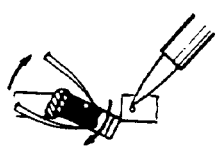

- Transistors, diodes, etc.

i) Melt solder at the side of single lead.

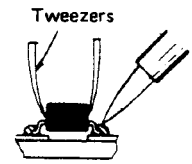

ii) Lift the unsolderd side upwards.

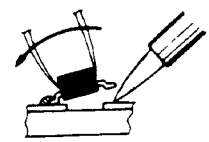

iii) Simultaneously melt solder at two leads of the other side and pull up the chip.

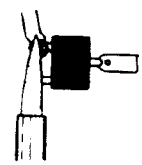

(3) Preheating and soldering of chip parts

Except transistors, make sure to preheat all chip parts, capacitors in particular, with a hot wind of 150°C approx. (of a hair dryer, etc.) for 2 minutes just before soldering, and immediately solder by a soldering iron of approx. 30 W.

(4) Attaching of chip parts

i) Heap up a proper amount of solder beforehand.

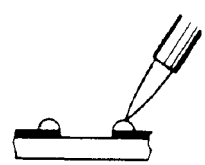

ii) Holding down a new chip by tweezers, solder it to the board by a soldering iron to melt solder from its lower part to the upper part (in the direction shown by a big arrow).

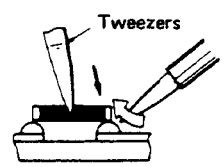

Note:
- Don't heat chip parts over 3 seconds.
- Don't rub electrodes.
- Don't use chip parts which were once removed.
- No cement is required.

3. Shapes of transistors & diodes

- **Transistors**

DTA124EK	2
DTA144EK	2
DTC114EK	1
DTC114YK	1
DTC144EK	1
DTC144EU	1
FMG2	3
FMS1	4
FMW1	5
IMX1	6
IMZ1	7
IMZ2	8
2SA1022C	9
2SB709	9
2SC2412K	9
2SC2778	9
2SC4081	9
2SD601/A	9
2SD602/A	9
2SK621	10

- **Diodes**

DAN202K	11
DAP202K	12
MA28WA	13
MA3056	13
MA3075	13

1	6	11
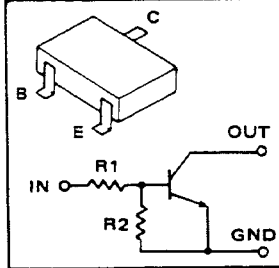	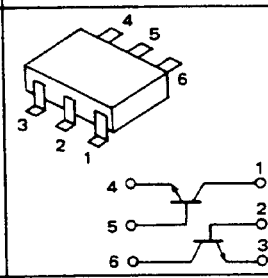	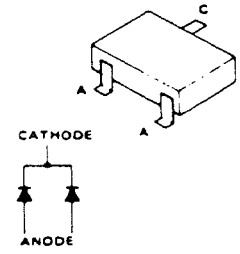
2	**7**	**12**
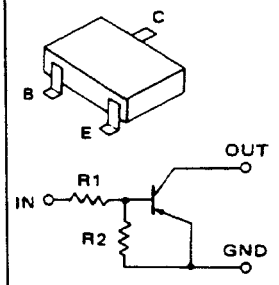	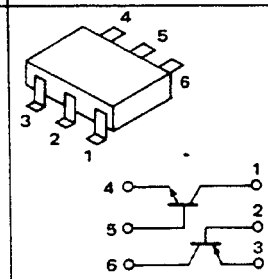	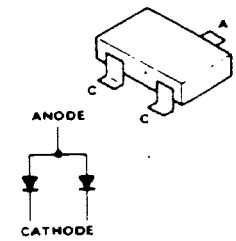
3	**8**	**13**
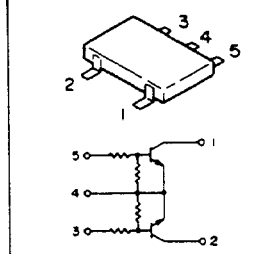	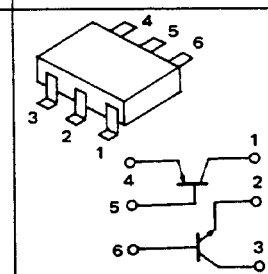	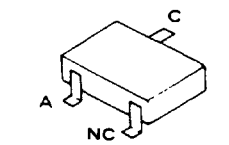
4	**9**	
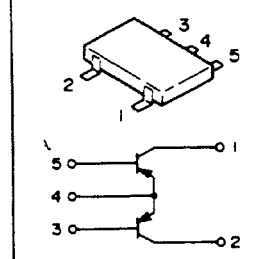	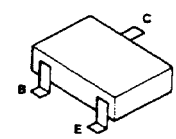	
5	**10**	
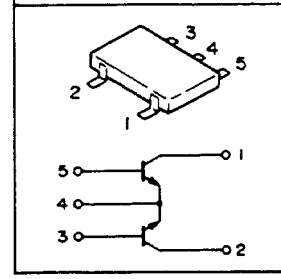	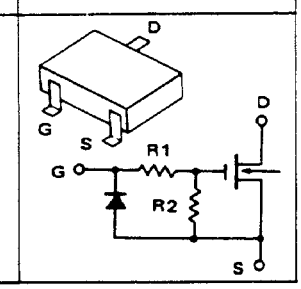	

4.2 INDEX TO PAGES OF MAIN BOARDS AND CIRCUIT BOARD LOCATION

4.2.1 Index to pages of main boards

Board No.	Board Name	Page of diagram			
		Block diagram	Schematic diagram	Circuit board	Parts list
01	MOTHER-1	—	4-29~32	4-33	6-1
02	MOTHER-2	—	4-34	4-35	6-1
10	PV PRE	4-6	4-35	4-35	—
11	REC/ITI	4-8	4-36	4-37~38	6-2~5
12	RF PROCESS-1	4-18~19	4-50~51	4-52	6-6~12
13	PV PROCESS	4-10~13	4-39~47	4-48~49	6-12~17
14	OUT MEM	4-14	4-56~57	4-58	6-17~21
15	ANA IN	4-9	4-59~61	4-62~4-63	6-21~31
17	OUT GEN	4-15	4-64~66	4-67~68	6-31~40
18	RF PROCESS-2	4-20	4-54~55	4-52	6-40~46
19	OUT ENC	4-16	4-69~70	4-71~72	6-47~51
20	ANA AUDIO	4-23	4-74~75	4-73	6-52~55
21	DIG AUDIO	4-22	4-76~78	4-79	6-55~61
22	AUDIO I/O	4-21	4-80~81	4-82	6-61~64
30	M-CTL/SERVO	4-7	4-83~84	4-85~86	6-65~70
31	SYS/TC	4-24~4-25	4-87~88	4-89~90	6-70~74
32	OPERATION	4-17	4-91	4-92~93	6-75~77
33	HP	—	—	4-92~93	6-78
36	REEL MDA	4-7	4-94	4-95	6-78~79
40	REAR-1	—	4-96	4-98	6-79~80
41	REAR-2	—	4-97	4-97	6-80~81
50	END SENSOR/FLYING ERASE	—	4-99	4-100	6-81~82
53	MODE MOTOR	—	—	4-100	6-82
54	C. HOUSING	—	—	—	6-82
55	MECHA TERMINAL	—	—	4-100	6-82
56	A/C HEAD	4-23	4-28	4-100	6-82
57	W SENSOR	—	—	4-100	6-82
60	DIG I/O	4-101	4-102~104	4-105	6-83~86

4.2.2 Circuit board location

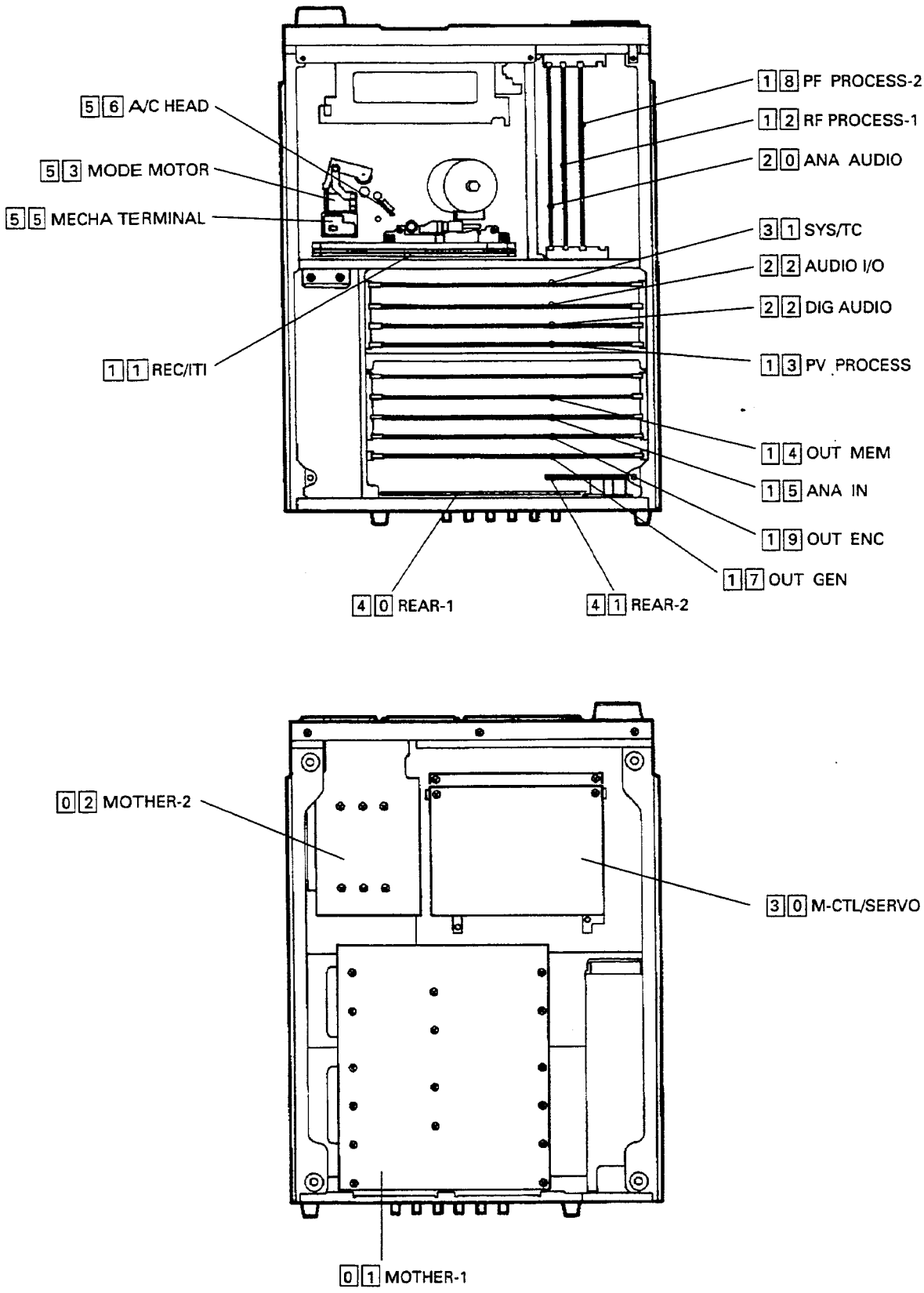

4.3 PV PRE CIRCUIT BOARD BLOCK DIAGRAM

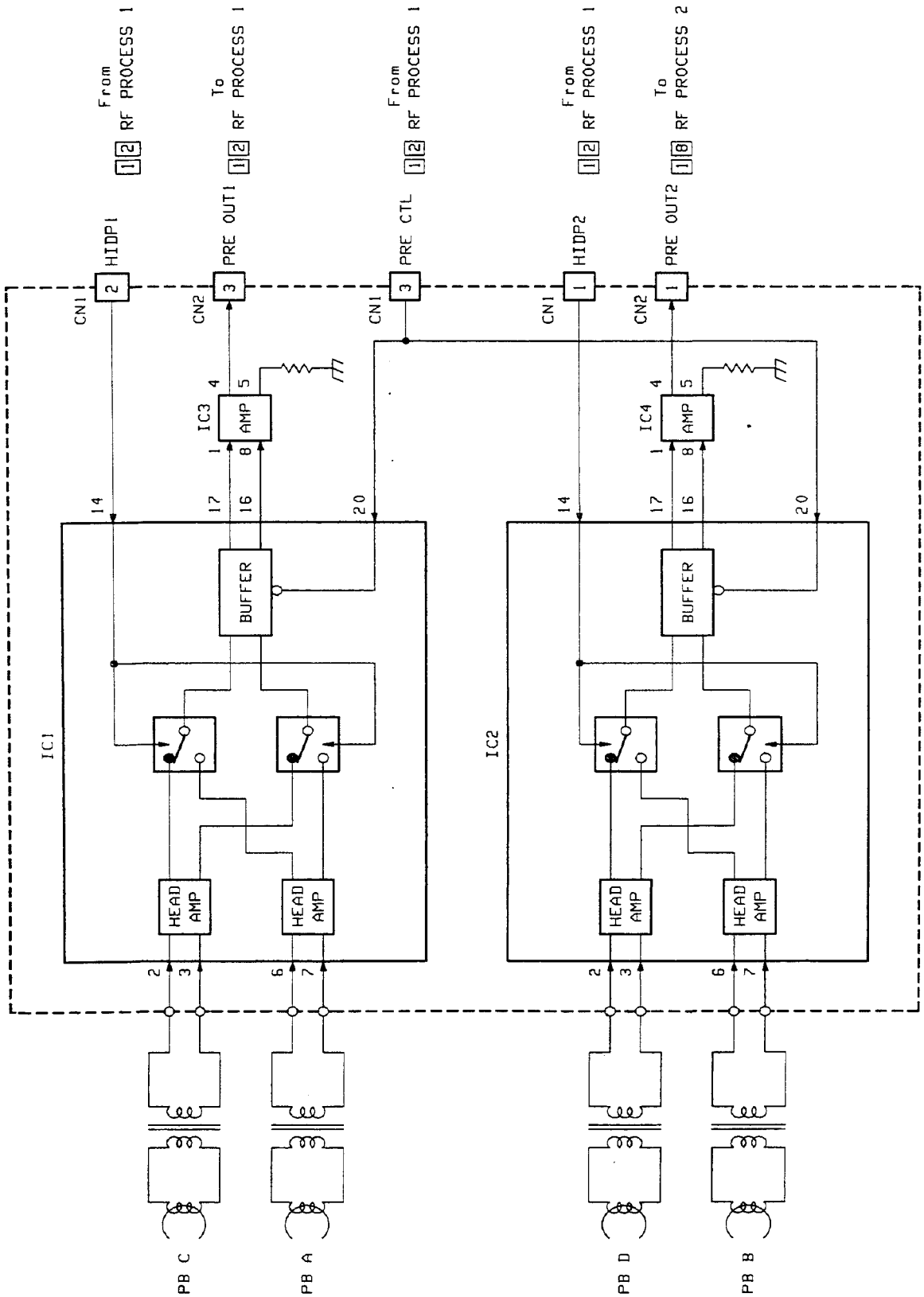

4.4 SERVO CIRCUIT BLOCK DIAGRAM

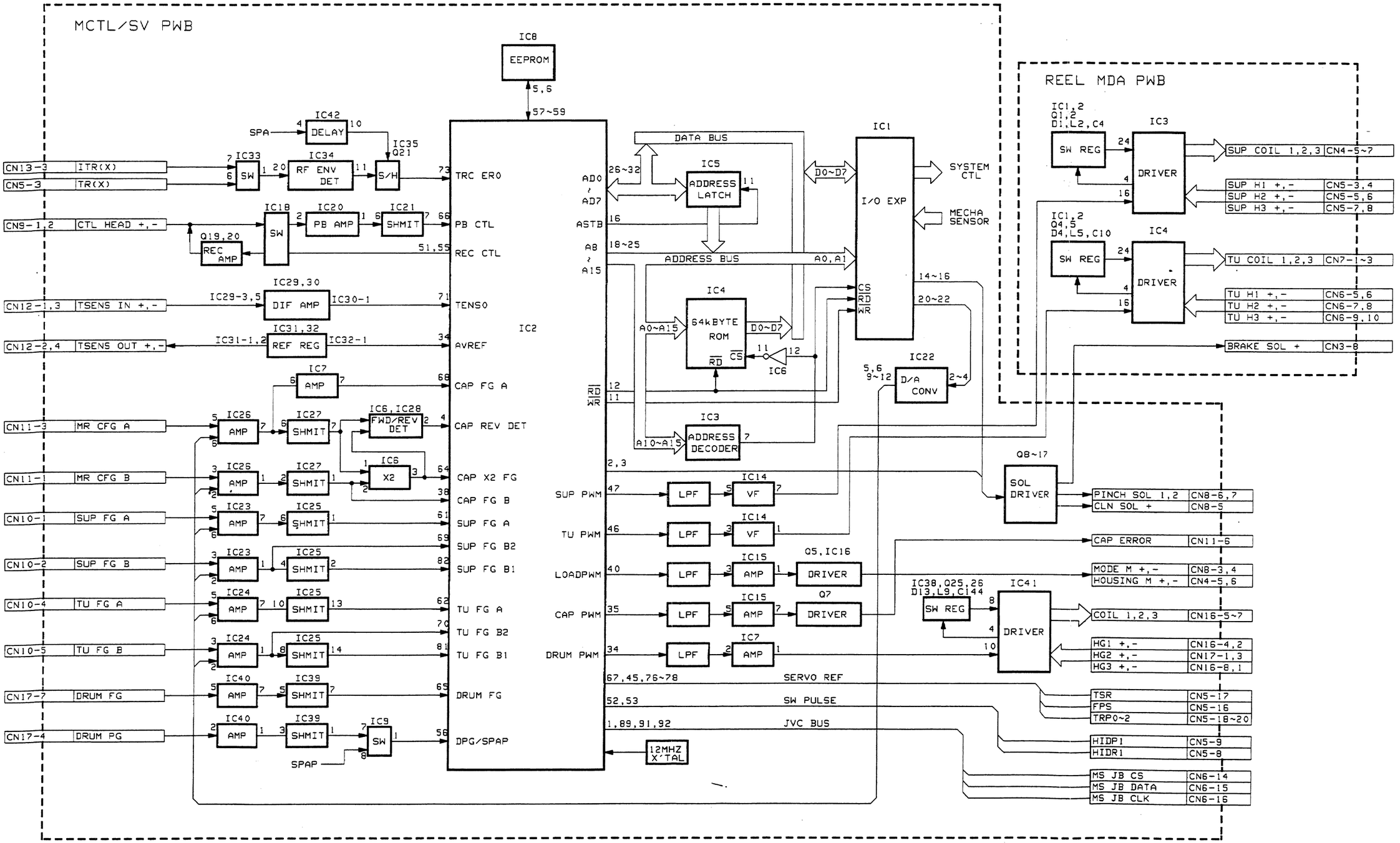

4-7

4.5 REC ITI CIRCUIT BOARD BLOCK DIAGRAM (D85/D80)

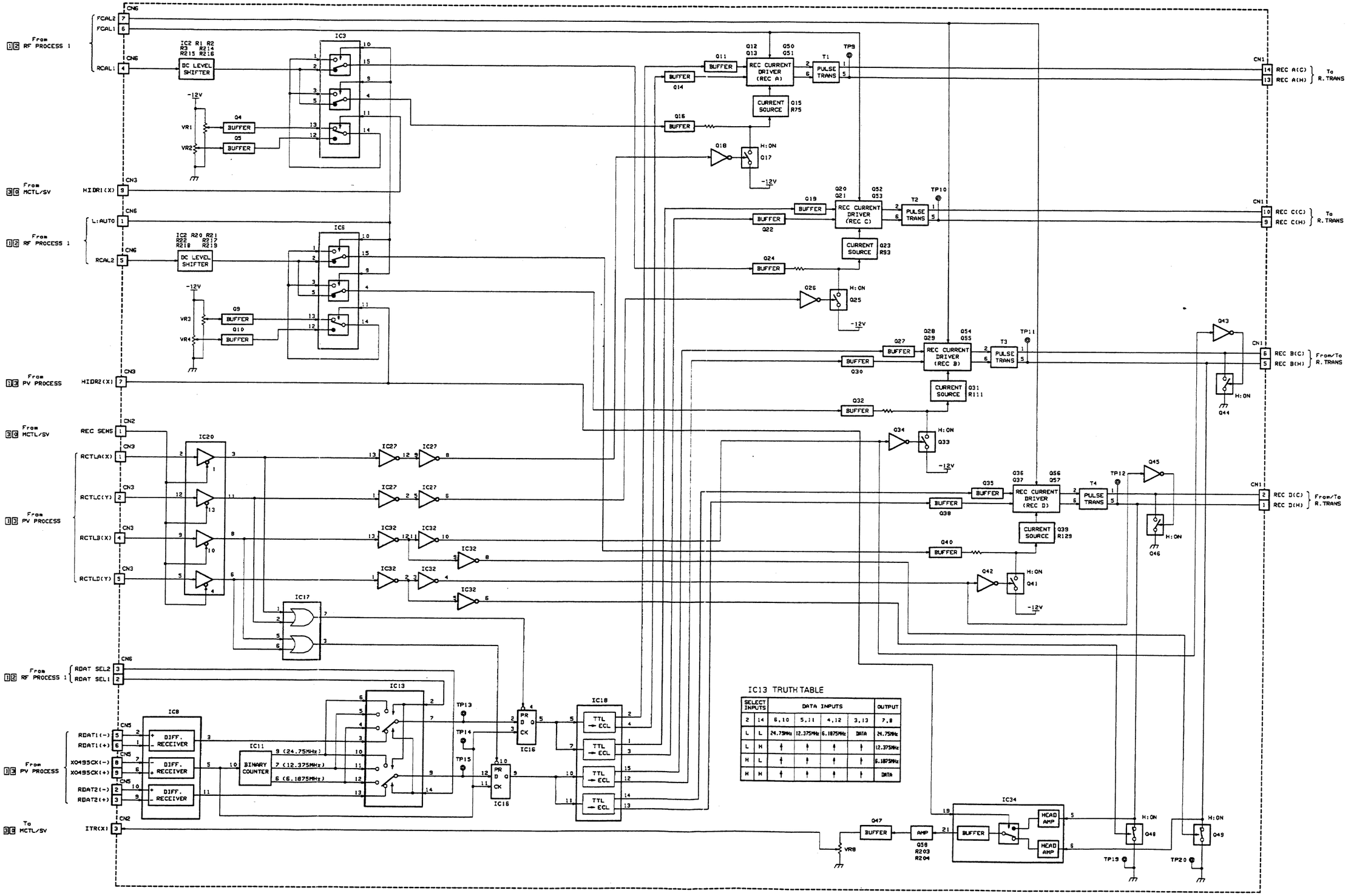

IC13 TRUTH TABLE

SELECT INPUTS		DATA INPUTS				OUTPUT
2	14	6,10	5,11	4,12	3,13	7,9
L	L	24.75MHz	12.375MHz	6.1875MHz	DATA	24.75MHz
L	H	↑	↑	↑	↑	12.375MHz
H	L	↑	↑	↑	↑	6.1875MHz
H	H	↑	↑	↑	↑	DATA

4-8

4.6 ANA IN CIRCUIT BOARD BLOCK DIAGRAM (D85/D80)

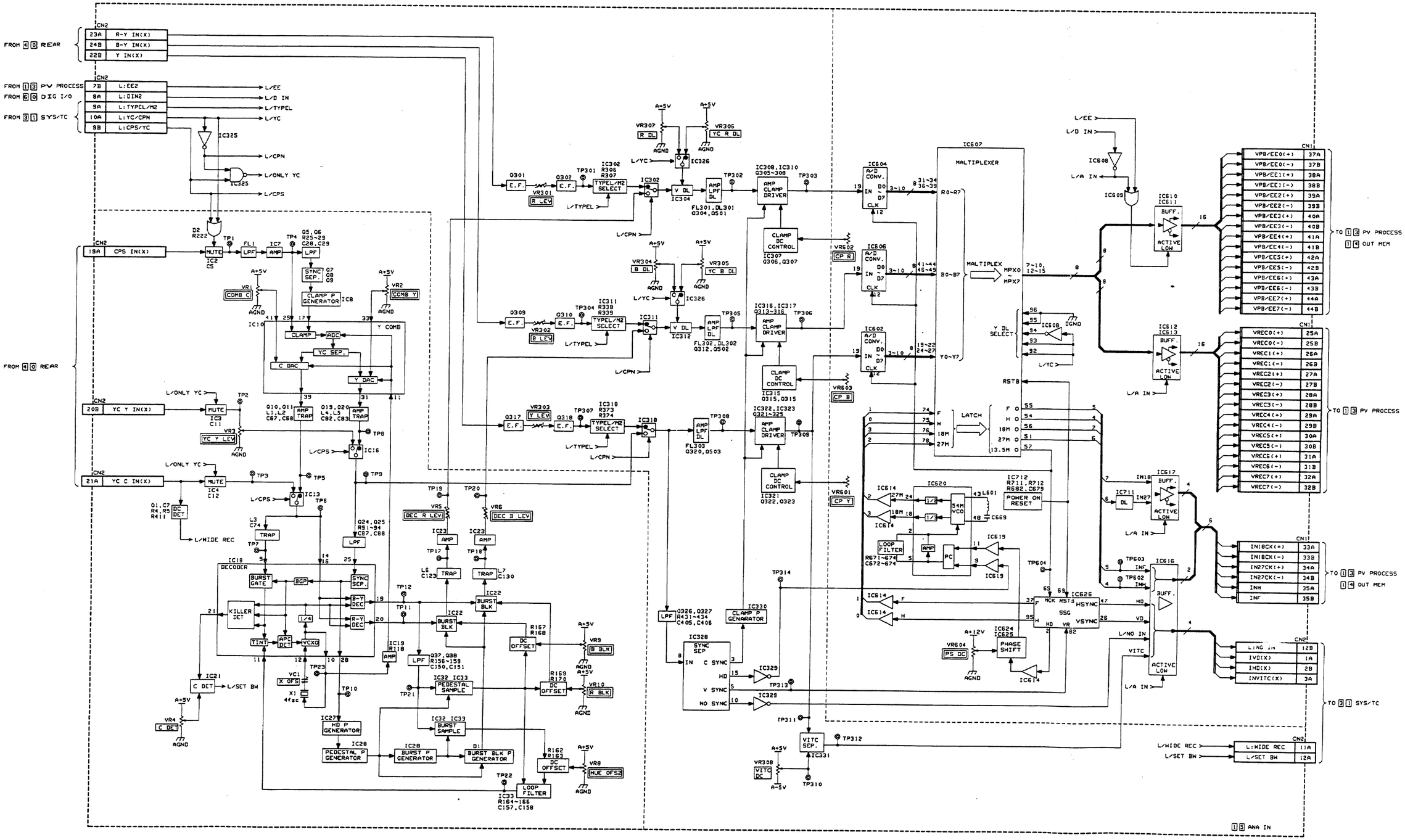

4-9

4.7 PV PROCESS CIRCUIT BOARD BLOCK DIAGRAMS

— DIAGRAM 1/4 —

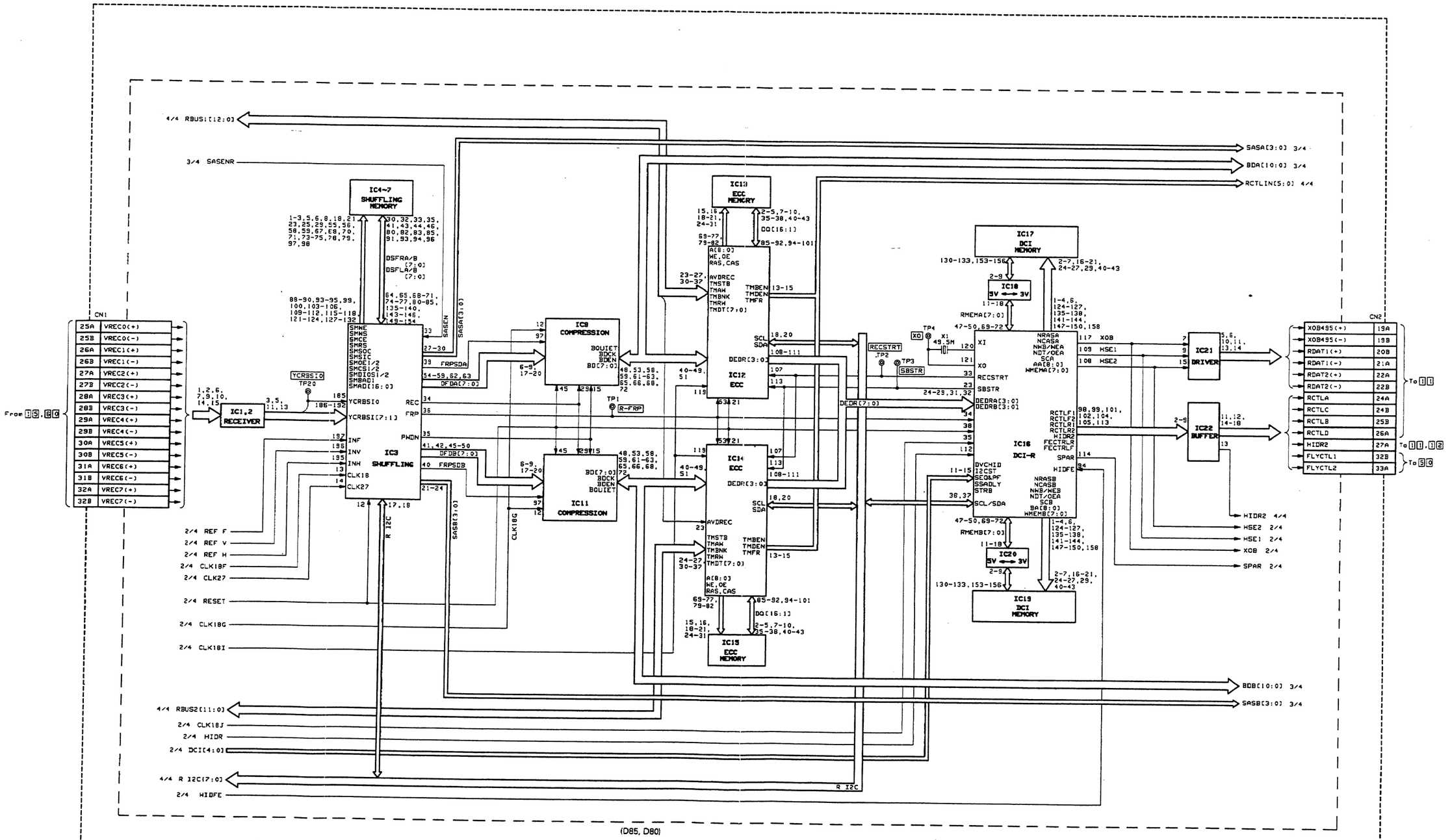

NOTE: 1I REC/ITI
1J RF PROCESS1
1S ANA IN
9C DECK TERM
6C DIG I/O

4-10

— DIAGRAM 2/4 —

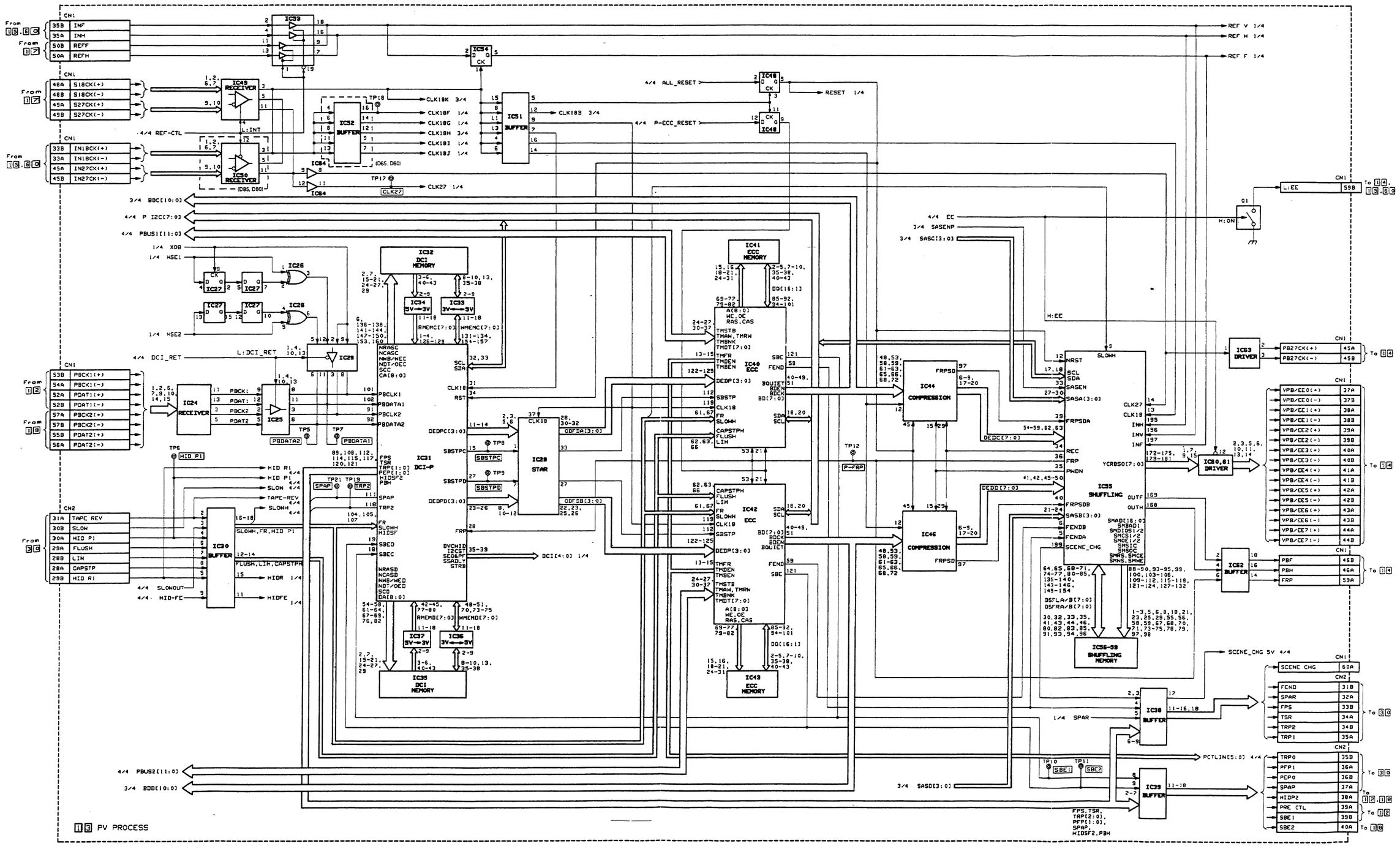
IC52
IC49 RECEIVER
IC50 RECEIVER
IC54
IC48
IC51 BUFFER
IC52 BUFFER
IC84
IC26
IC27
IC28
IC24 RECEIVER
IC25
IC32 DCI MEMORY
IC34 3V⇔3V
IC33 3V⇔3V
IC37 3V⇔3V
IC36 3V⇔3V
IC35 DCI MEMORY
IC31 DCI-P
IC29 STAR
IC30 BUFFER
IC41 ECC MEMORY
IC40 ECC
IC42 ECC
IC43 ECC MEMORY
IC44 COMPRESSION
IC46 COMPRESSION
IC35 SHUFFLING
IC36-38 SHUFFLING MEMORY
IC63 DRIVER
IC60,61 DRIVER
IC62 BUFFER
IC38 BUFFER
IC39 BUFFER
REF V 1/4
REF H 1/4
REF F 1/4
4/4 ALL_RESET
RESET 1/4
4/4 P-ECC_RESET
CLK18K 3/4
CLK18F 1/4
CLK18G 1/4
CLK18H 3/4
CLK18I 1/4
CLK18J 1/4
CLK18B 3/4
CLK27 1/4
4/4 REF-CTL
L:INT
3/4 BDC[10:0]
4/4 P I2C[7:0]
4/4 PBUS1[11:0]
4/4 EE
3/4 SASENP
3/4 SASC[3:0]
H:EE
L:EE
1/4 XOB
1/4 HSE1
1/4 HSE2
4/4 DCI_RET
L:DCI_RET
DCI[4:0] 1/4
SCENE_CHG 5V 4/4
1/4 SPAR
PCTLIN[5:0] 4/4
3/4 SASD[3:0]
4/4 PBUS2[11:0]
3/4 BDD[10:0]
SLOWOUT
HID-FC
HIDR 1/4
HIDF 1/4
HID R1
HID P1
SLOW
TAPE-REV
SLOWH
FLUSH,LIN,CAPSTPH
SLOWH,FR,HID P1
P-FRP
SBE1
SBE2
CN1
CN2
To 14
To 30
To 12,16
To 12
To 16
PV PROCESS
NOTE: 12 RF PROCESS1
14 OUT MEM
15 ANA IN
17 OUT/GEN
16 RF PROCESS2
30 MCTL/SV
60 DIG I/O

— DIAGRAM 3/4 —

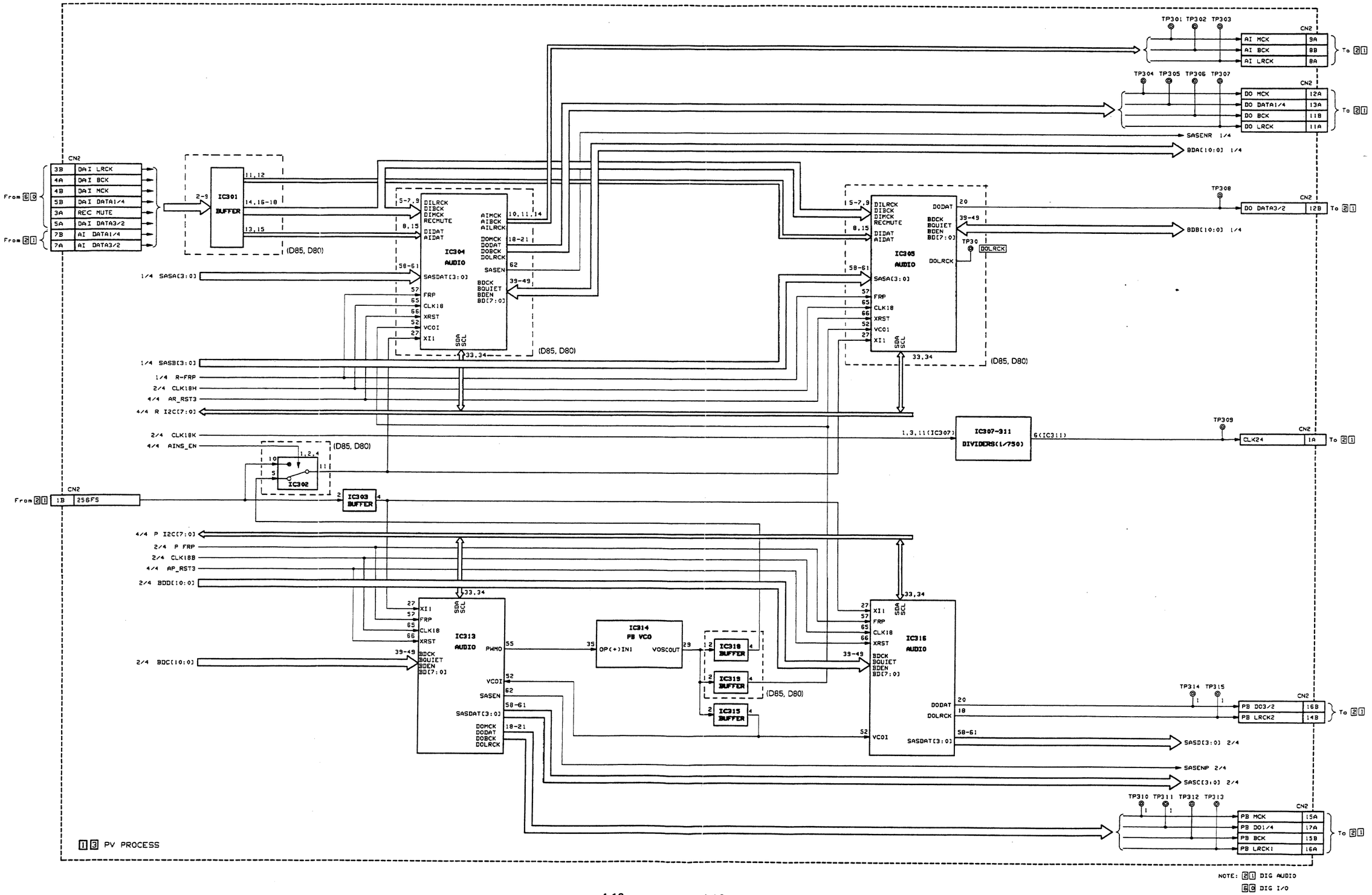

4-12

— DIAGRAM 4/4 —

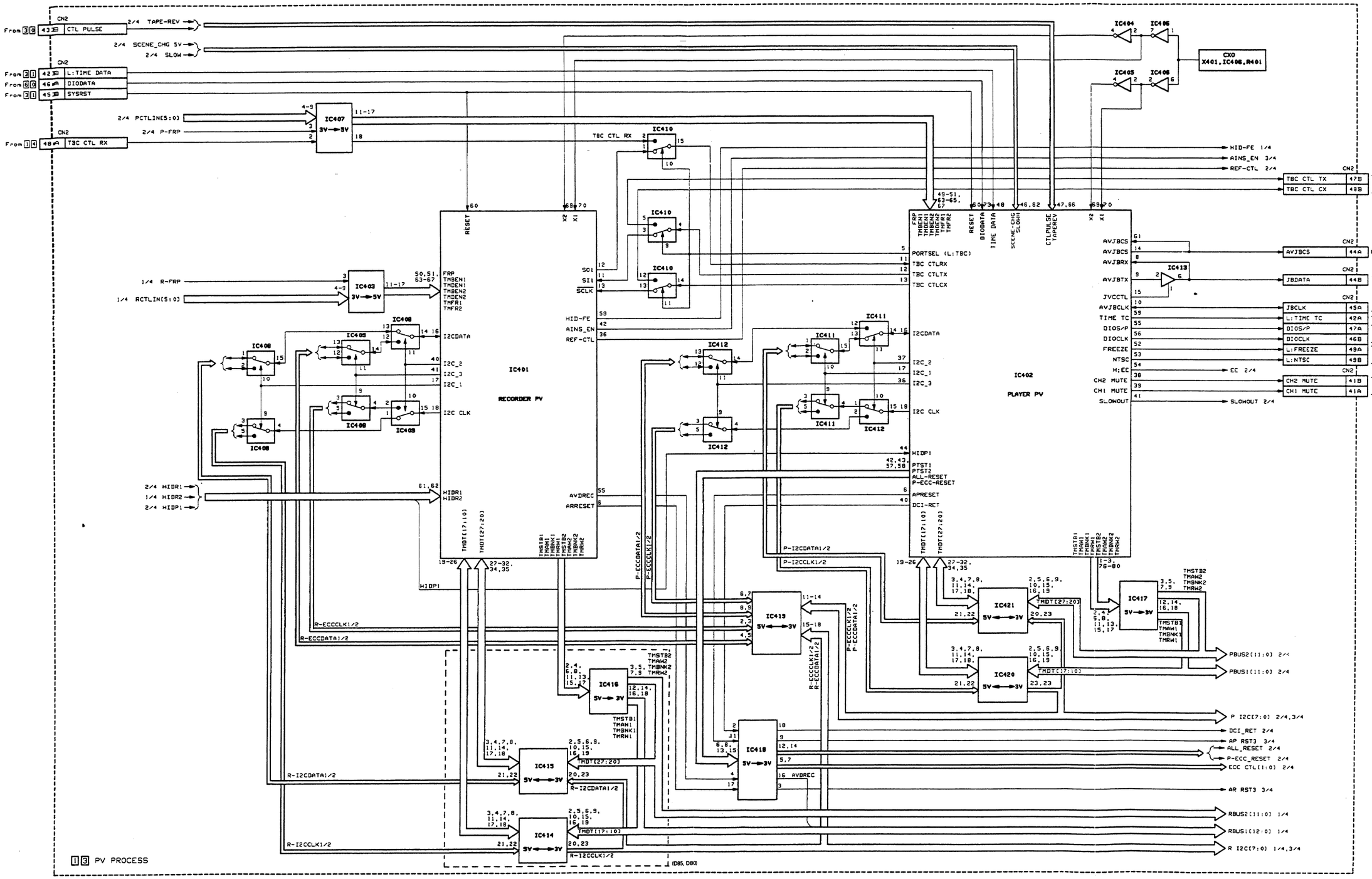

NOTE: 12 RF PROCESS1 31 SYSCON/TC
14 OUT MEM 32 OPERATION
21 RF PROCESS2 60 DIG I/O
50 MCTL/SV

4.8 OUT MEM CIRCUIT BOARD BLOCK DIAGRAM

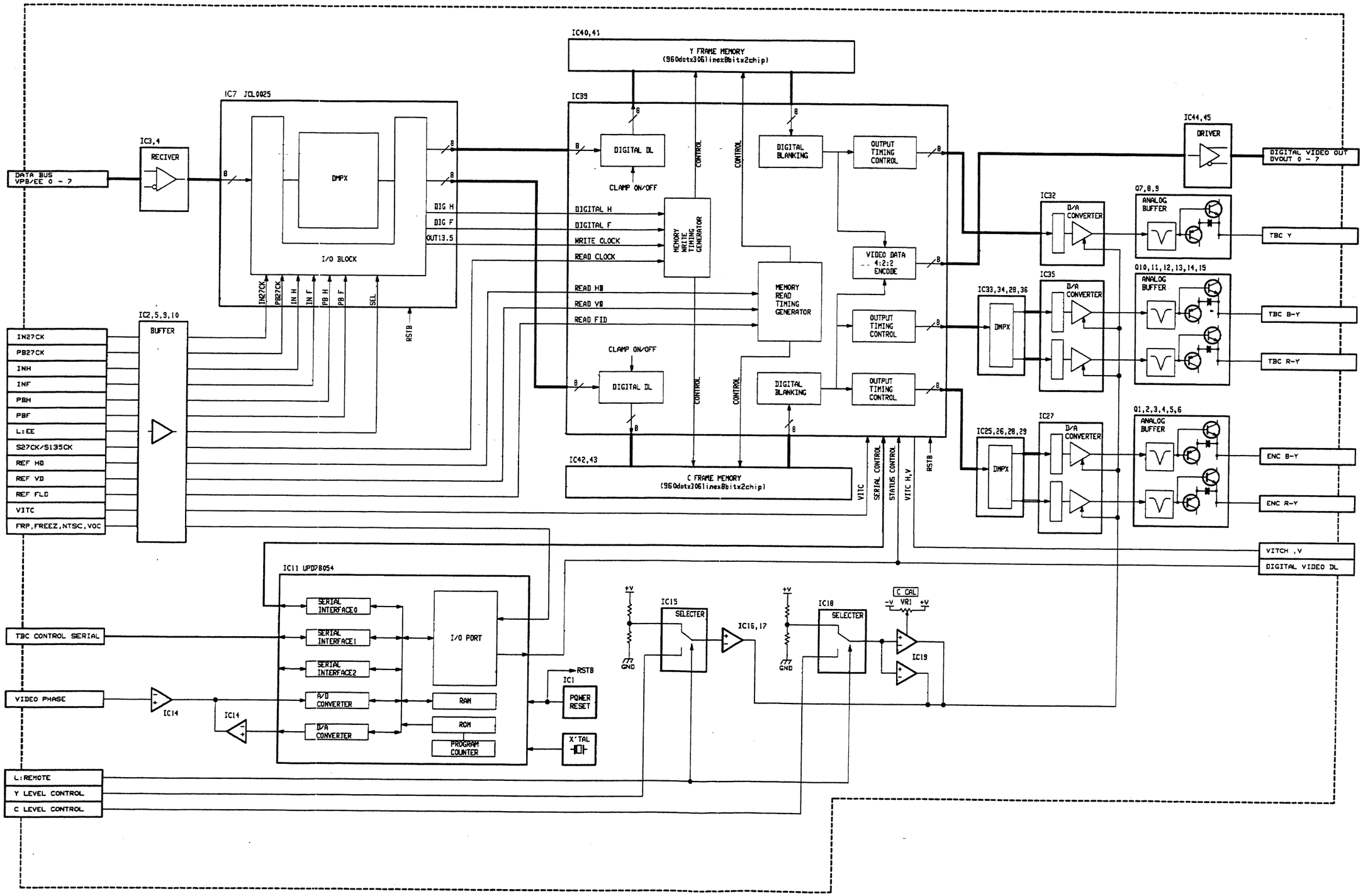

4-14

4.9 OUT GEN CIRCUIT BOARD BLOCK DIAGRAM

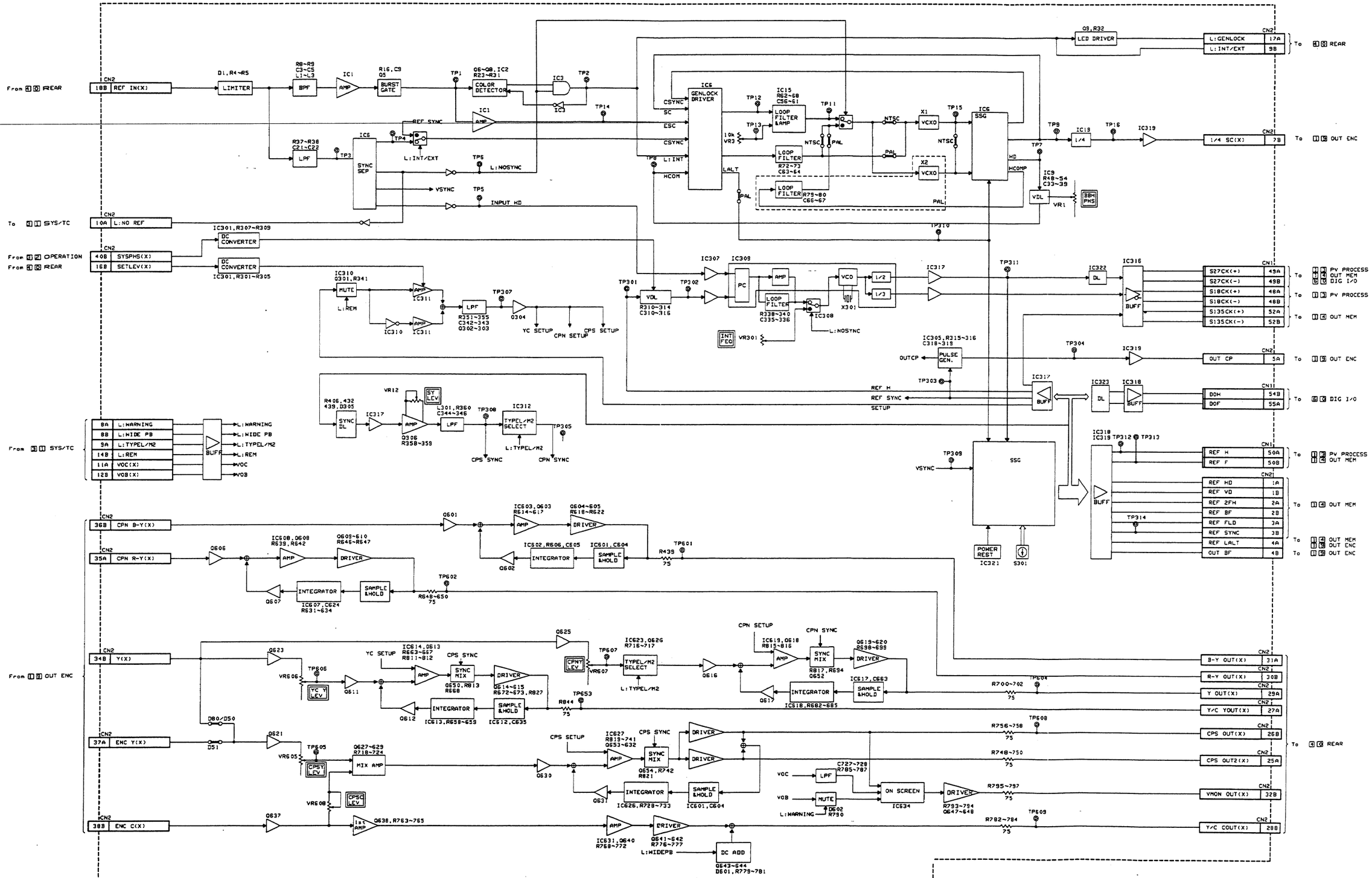

4.10 OUT ENC CIRCUIT BOARD BLOCK DIAGRAM

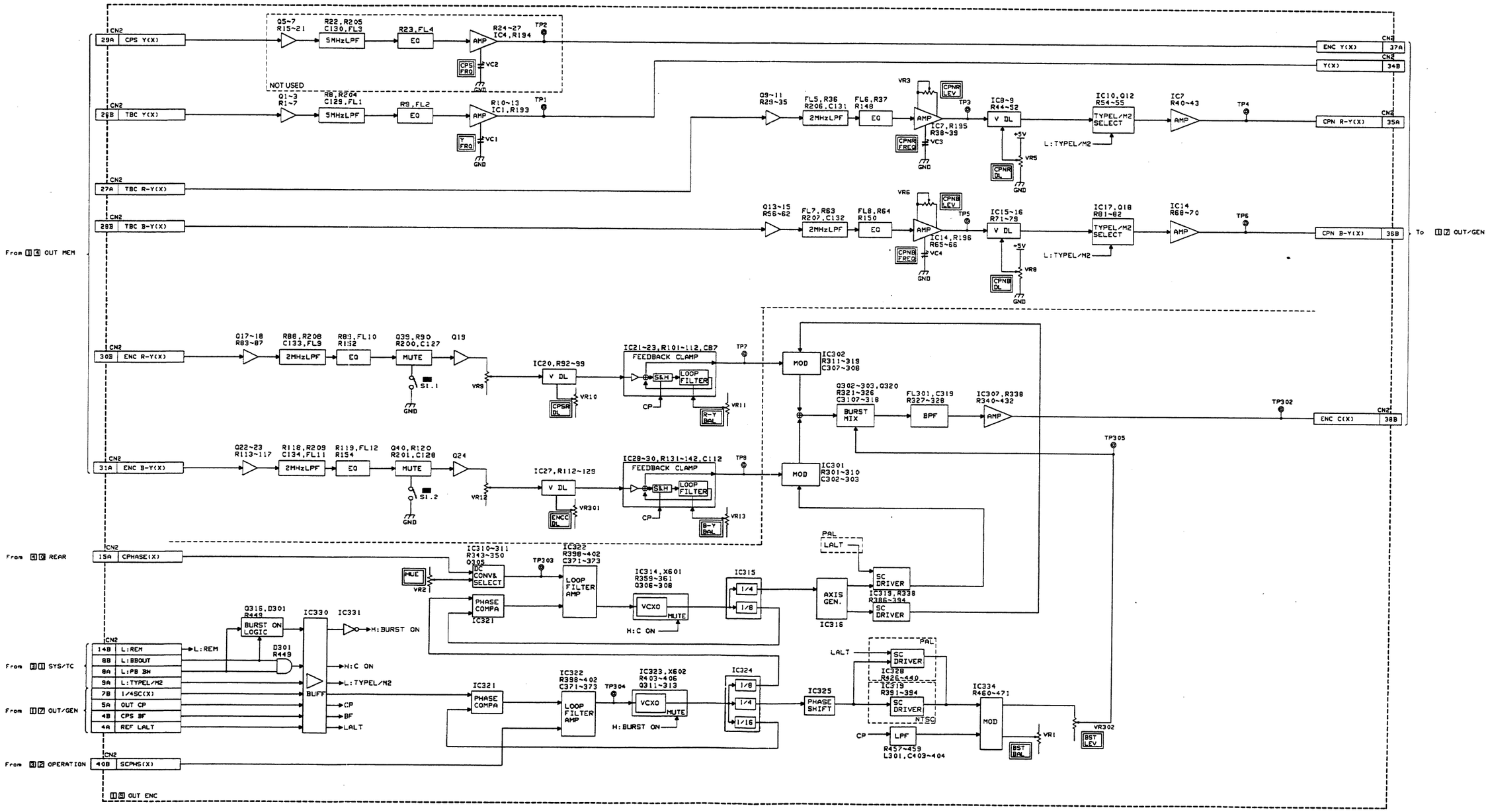

4-16

4.11 OPERATION CIRCUIT BOARD BLOCK DIAGRAM

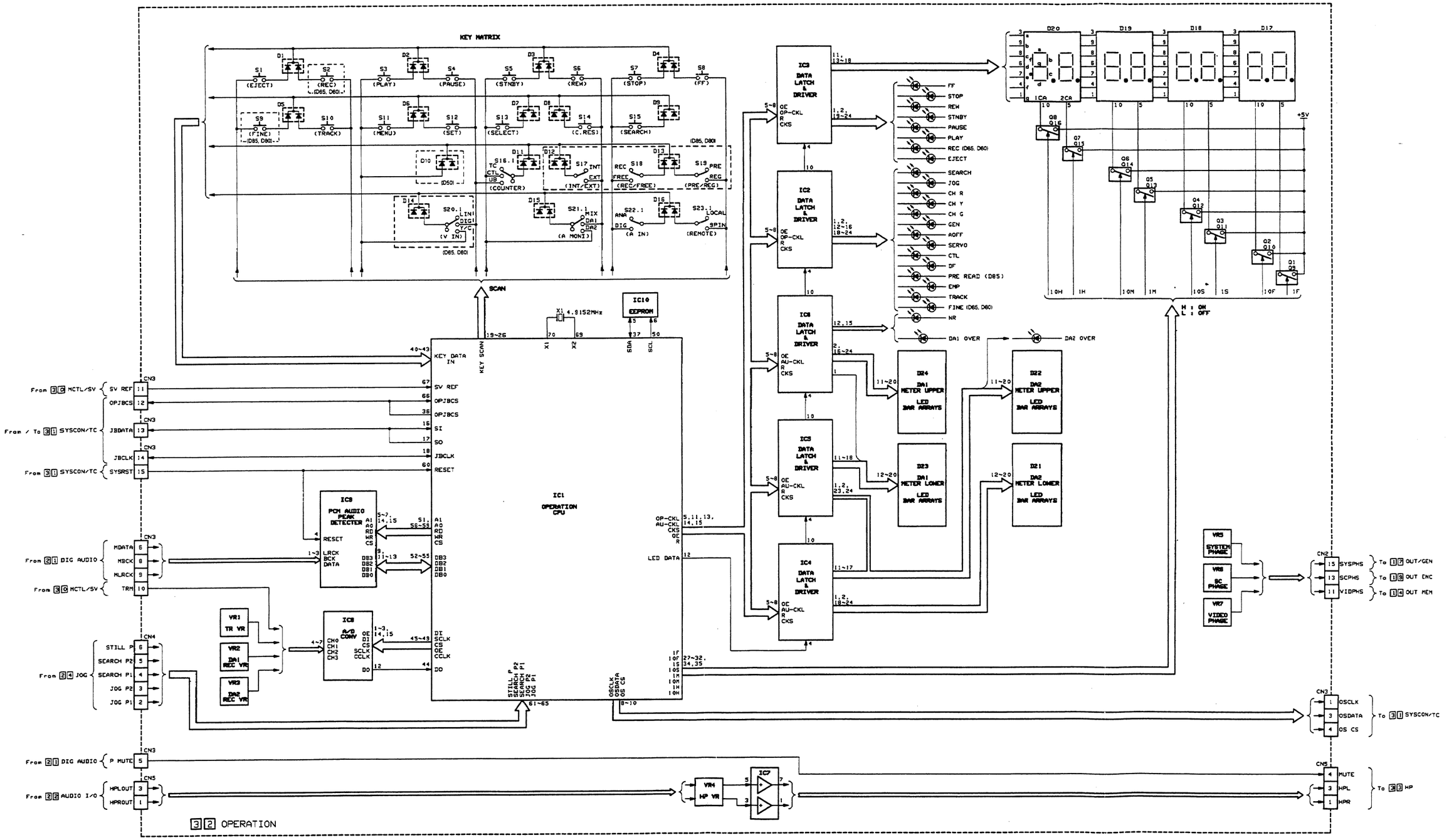

4-17

4.12 RF PROCESS CIRCUIT BLOCK DIAGRAMS

4.12.1 RF PROCESS-1 CIRCUIT BOARD BLOCK DIAGRAMS

— DIAGRAM 1/2 —

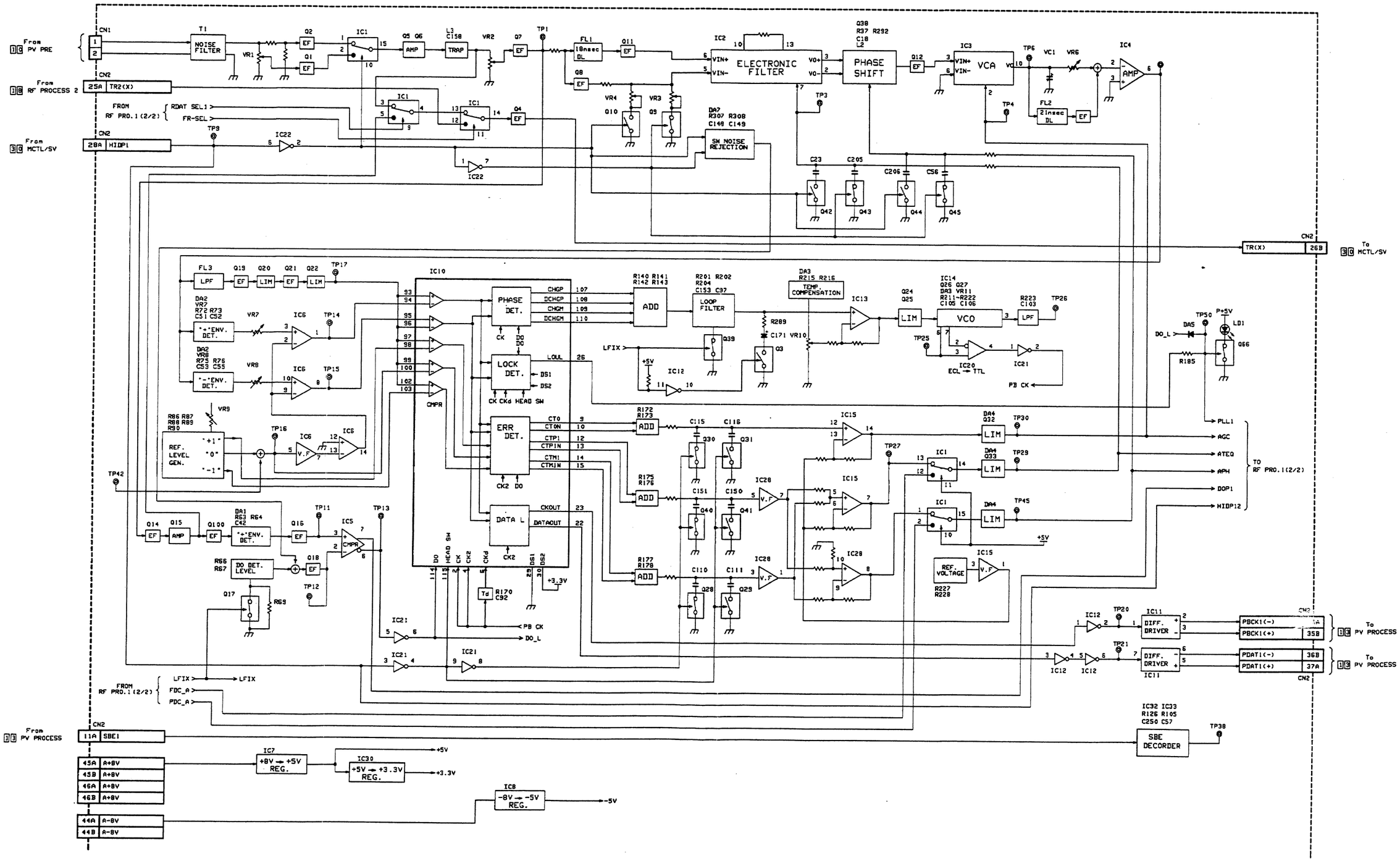

4-18

— DIAGRAM 2/2 —

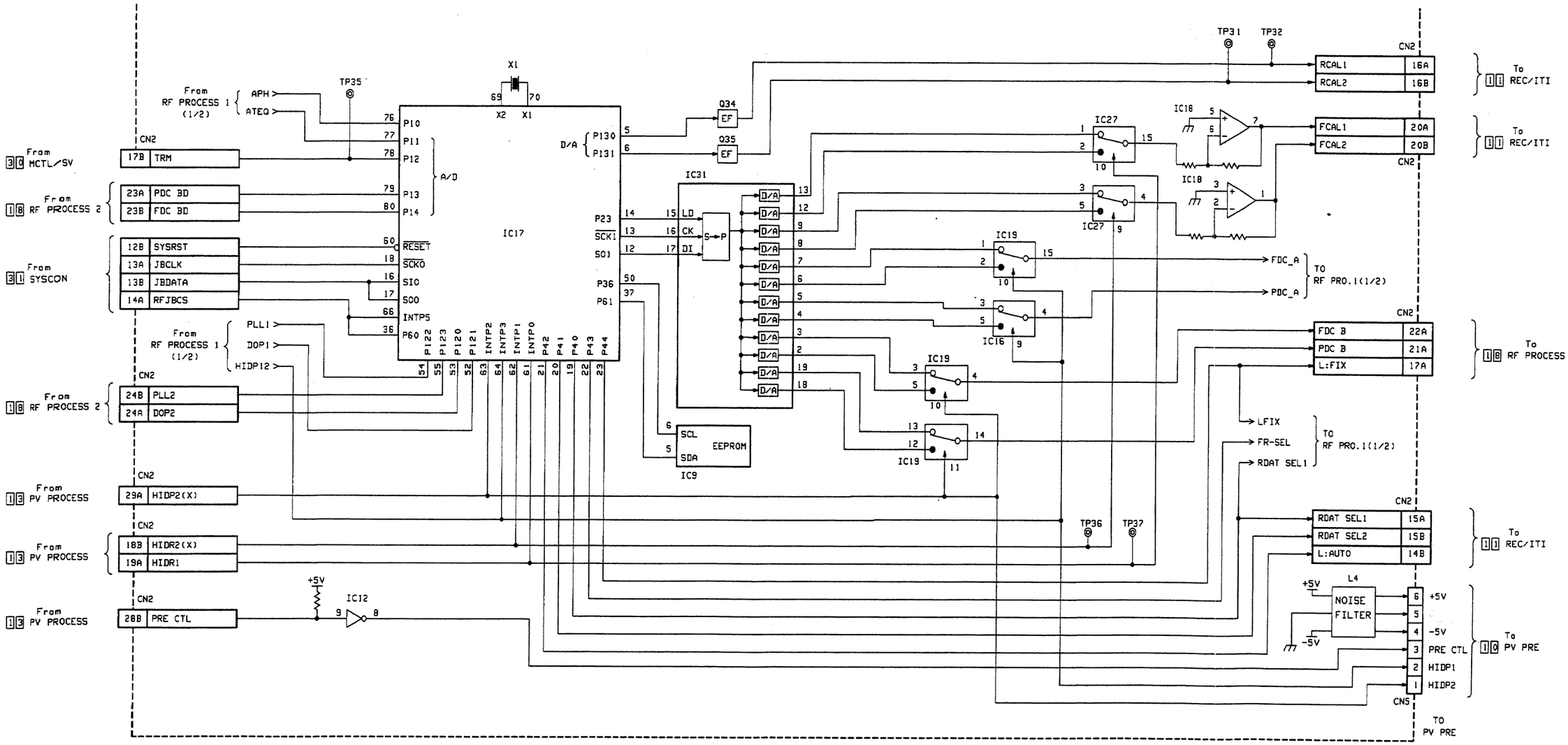

4-19

4.12.2 RF PROCESS-2 CIRCUIT BOARD BLOCK DIAGRAM

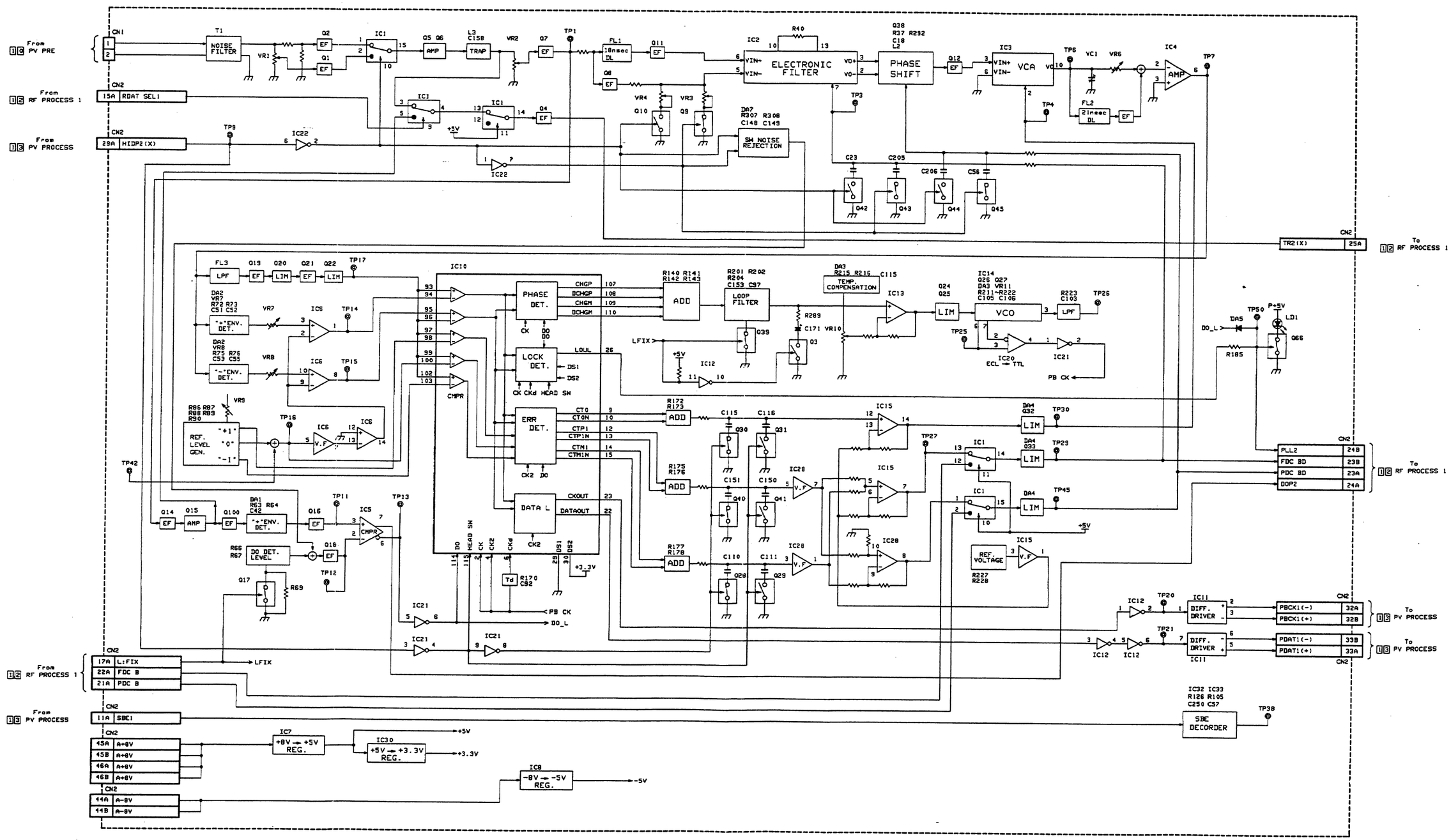

4-20

4.13 AUDIO CIRCUIT BLOCK DIAGRAMS

— DIAGRAM 1/3 —

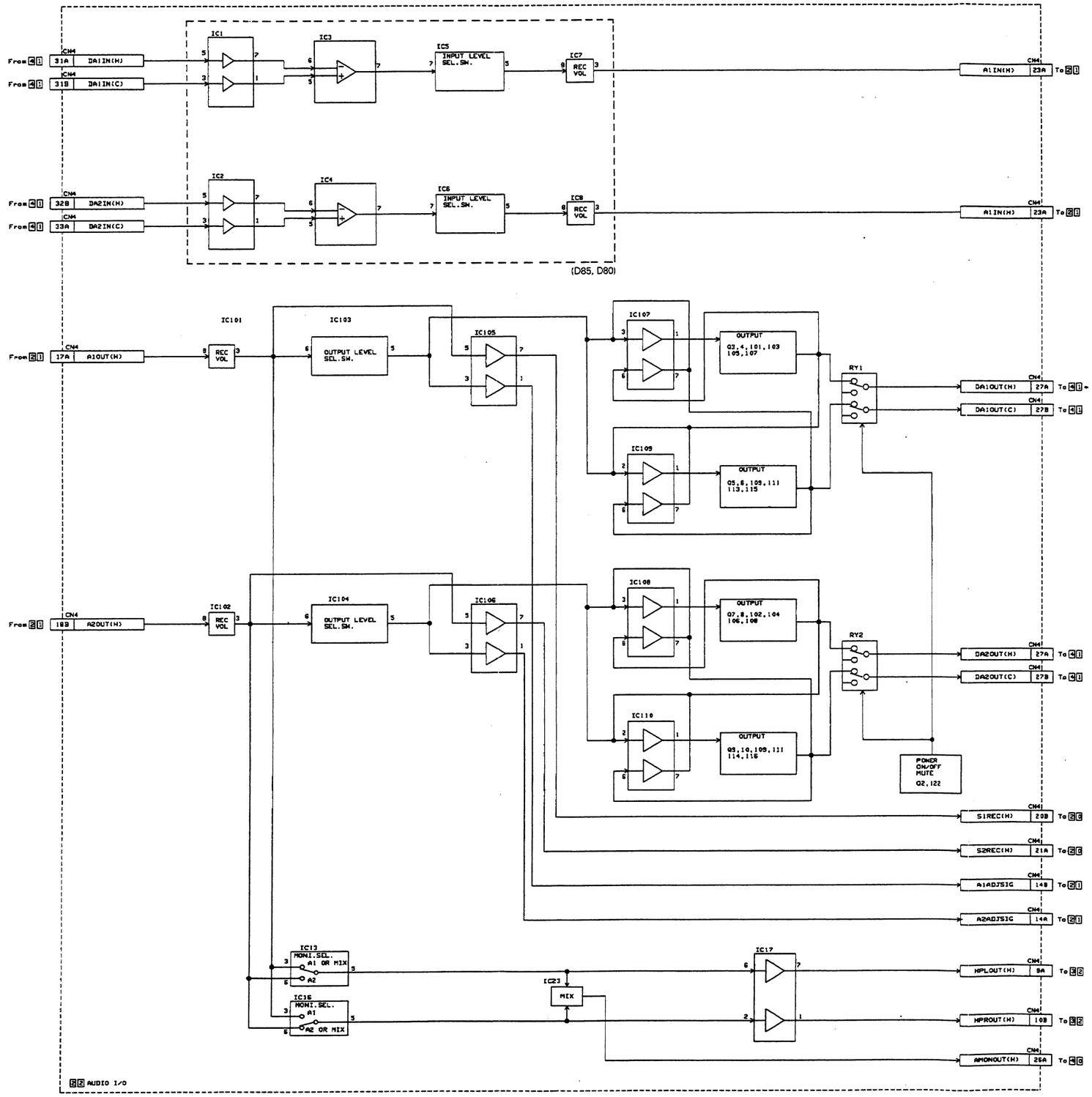

4-21

— DIAGRAM 2/3 —

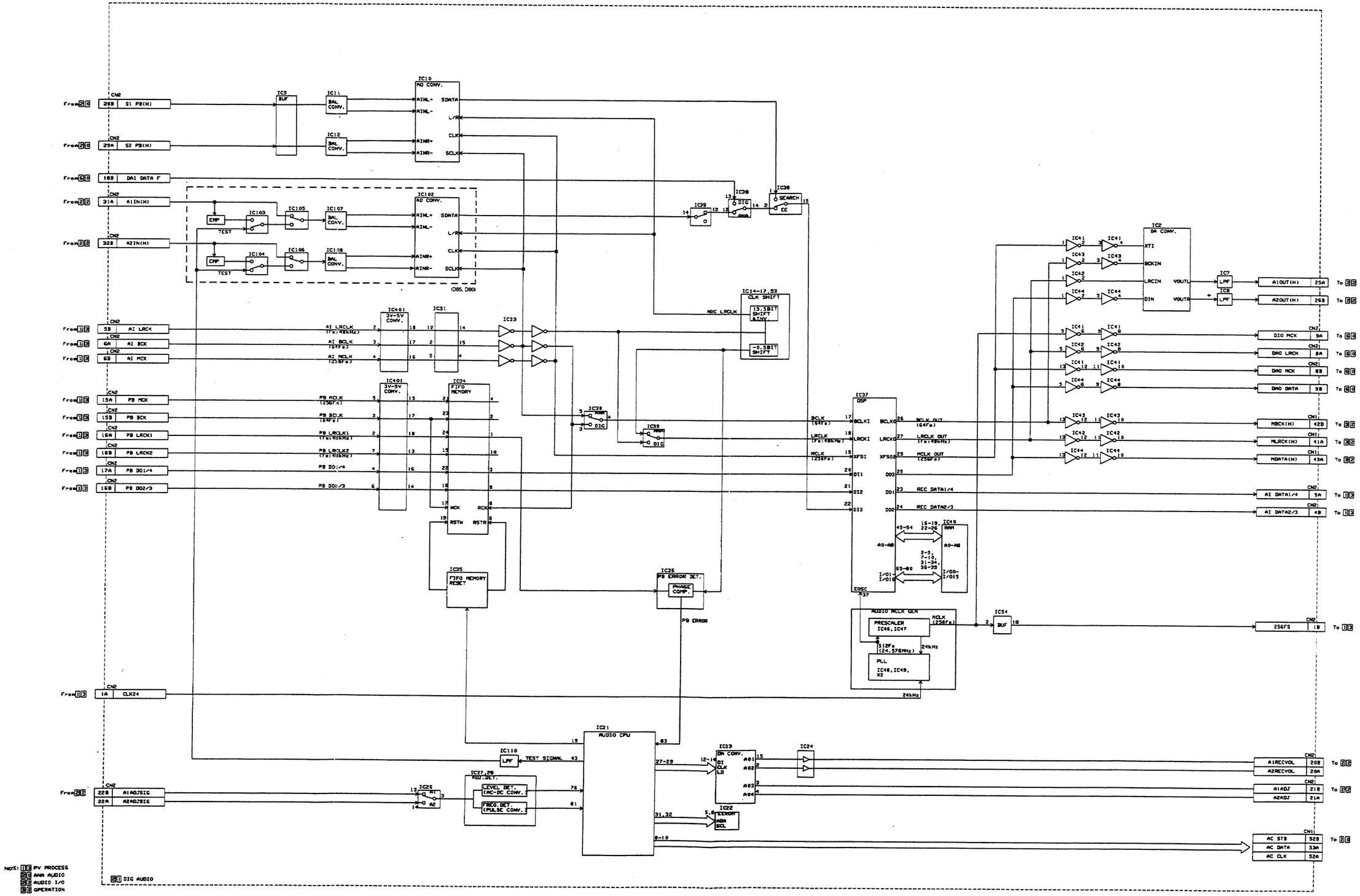
IC10 AD CONV.
IC102 AD CONV.
IC2 DA CONV.
IC37 DSP
IC21 AUDIO CPU
IC401 3V-5V CONV.
IC24 FIFO MEMORY
IC35 FIFO MEMORY RESET
IC36 PB ERROR DET.
IC14-17,53 CLK SHIFT
IC40 RAM
IC54 BUF
IC23 DA CONV.
IC22 EEPROM
IC110 LPF
IC27,28 AUX DET.
IC25
IC38
IC39
IC7 LPF
IC8 LPF
AUDIO MCLK GEN
PRESCALER IC46, IC47
PLL IC48, IC49, X2
512Fs (24.576MHz)
24kHz
256FS
MCLK (256Fs)
ADC LRCLK
AI LRCLK (Fs:48kHz)
AI BCLK (64Fs)
AI MCLK (256Fs)
PB MCLK (256Fs)
PB BCLK (64Fs)
PB LRCLK1 (Fs:48kHz)
PB LRCLK2 (Fs:48kHz)
PB DO1/4
PB DO2/3
BCLK (64Fs)
LRCLK (Fs:48kHz)
MCLK (256Fs)
BCLK OUT (64Fs)
LRCLK OUT (Fs:48kHz)
MCLK OUT (256Fs)
REC DATA1/4
REC DATA2/3
TEST SIGNAL
PB ERROR
EOSC
A1ADJSIG
A2ADJSIG
A1OUT(H)
A2OUT(H)
DIO MCK
DAO LRCK
DAO MCK
DAO DATA
MBCK(H)
MLRCK(H)
MDATA(H)
AI DATA1/4
AI DATA2/3
A1RECVOL
A2RECVOL
A1ADJ
A2ADJ
AC STB
AC DATA
AC CLK
S1 PB(H)
S2 PB(H)
DA1 DATA F
A1IN(H)
A2IN(H)
AI LRCK
AI BCK
AI MCK
PB MCK
PB BCK
PB LRCK1
PB LRCK2
CLK24
NOTE: PV PROCESS
ANA AUDIO
AUDIO I/O
OPERATION
DIG AUDIO

— DIAGRAM 3/3 —

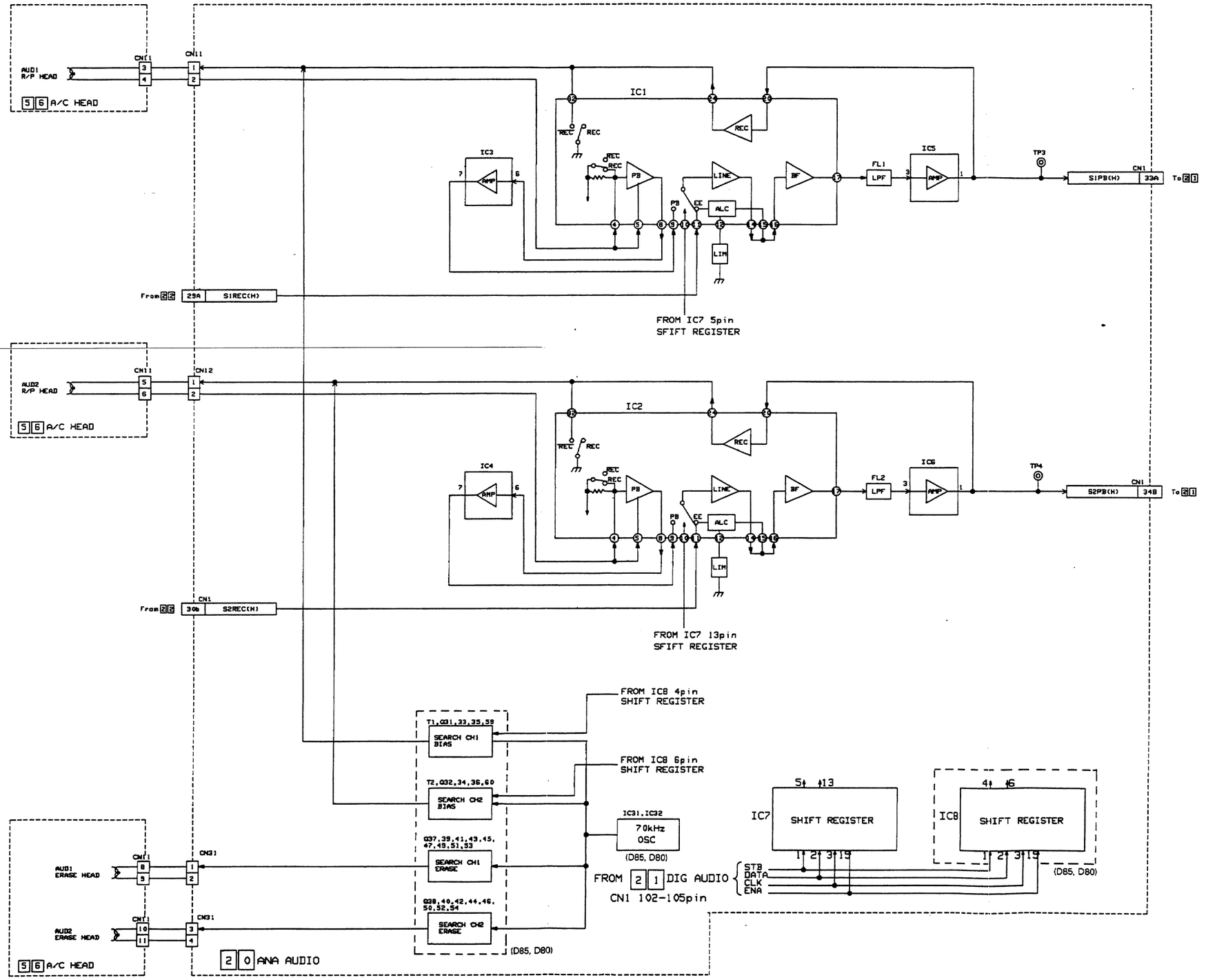

4-23

4.14 SYS/TC CIRCUIT BOARD BLOCK DIAGRAMS

— DIAGRAM 1/2 —

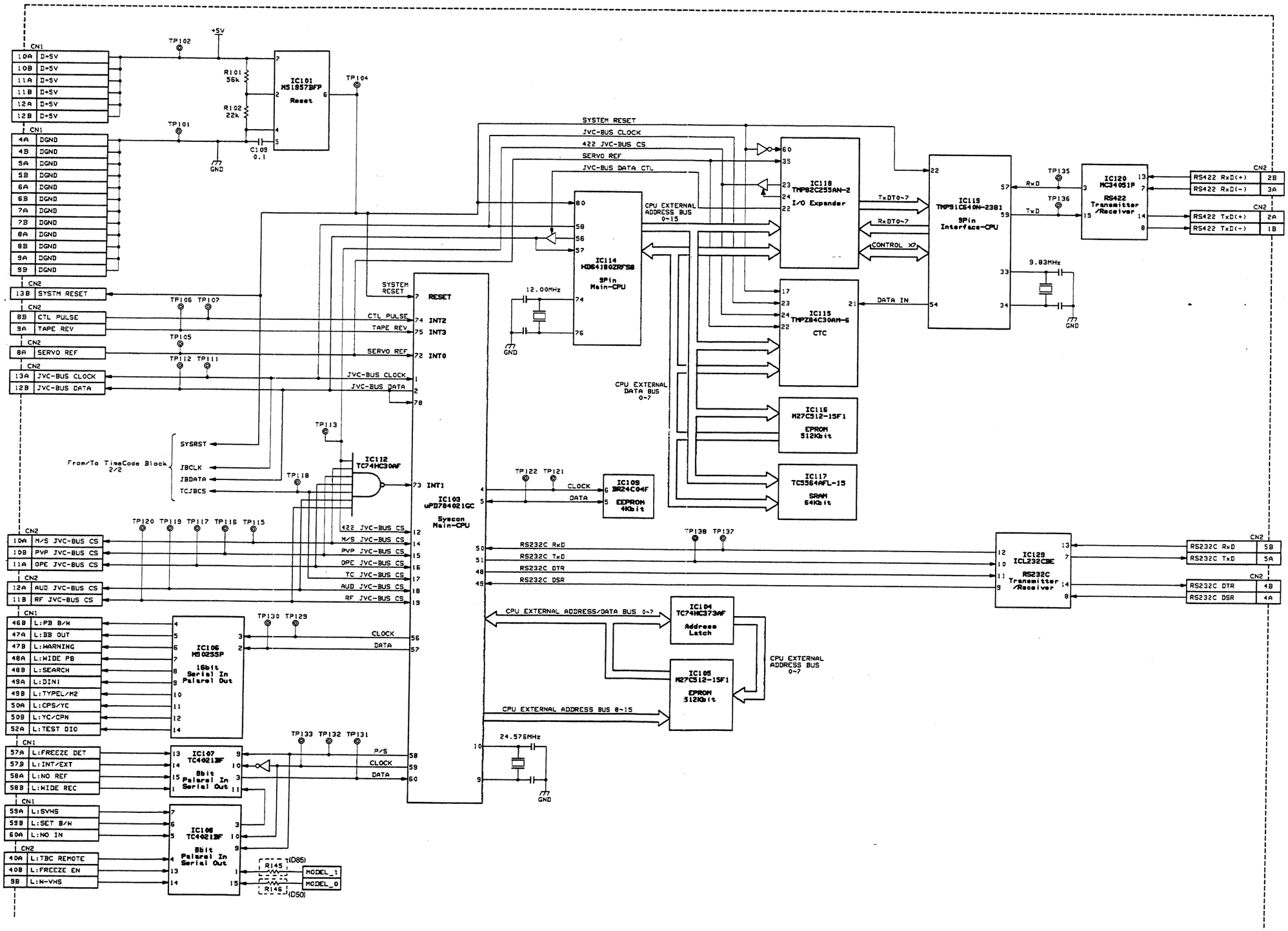

4-24

— DIAGRAM 2/2 —

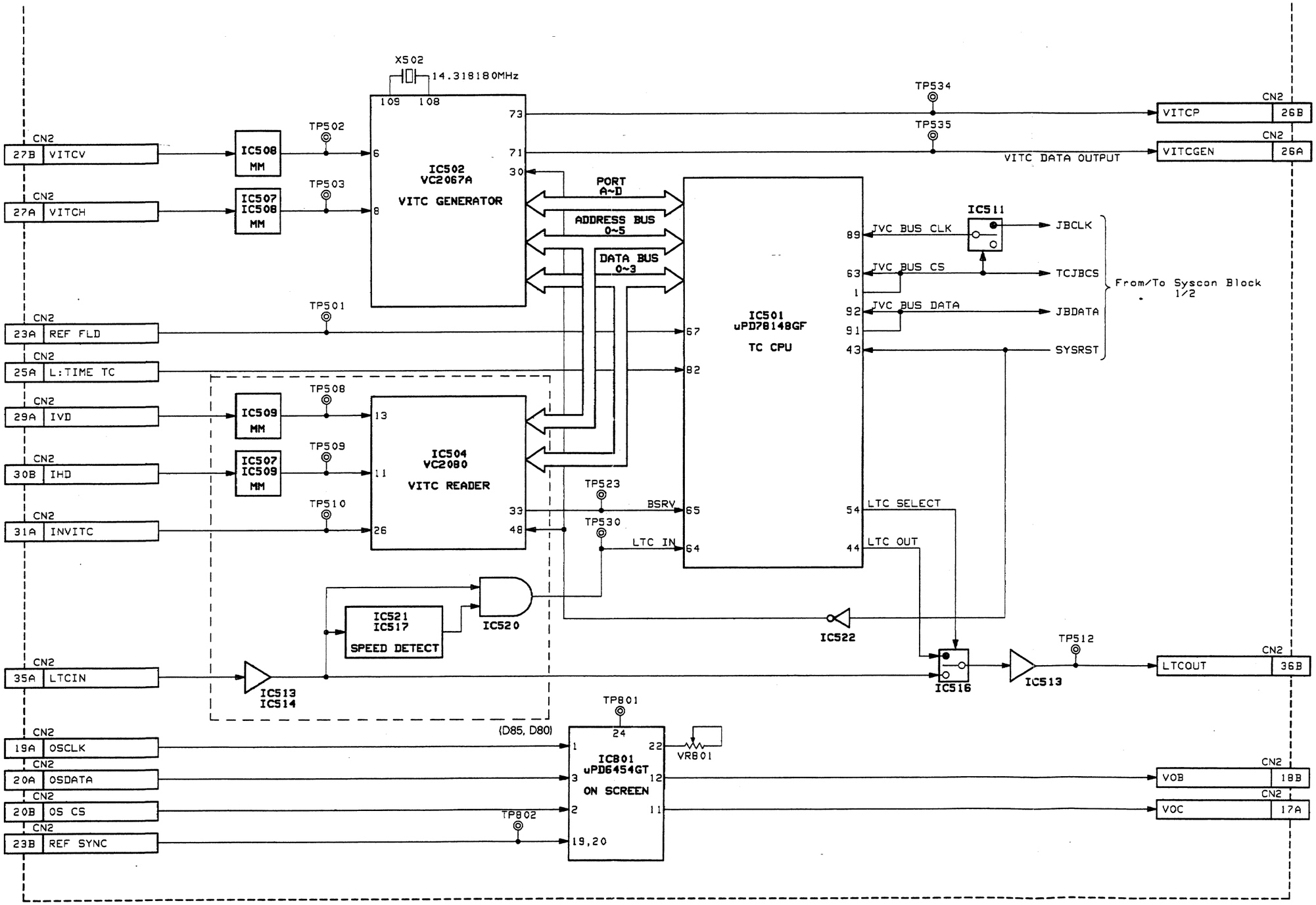

4-25

4.15 OVERALL WIRING DIAGRAMS

— DIAGRAM 1/3 —

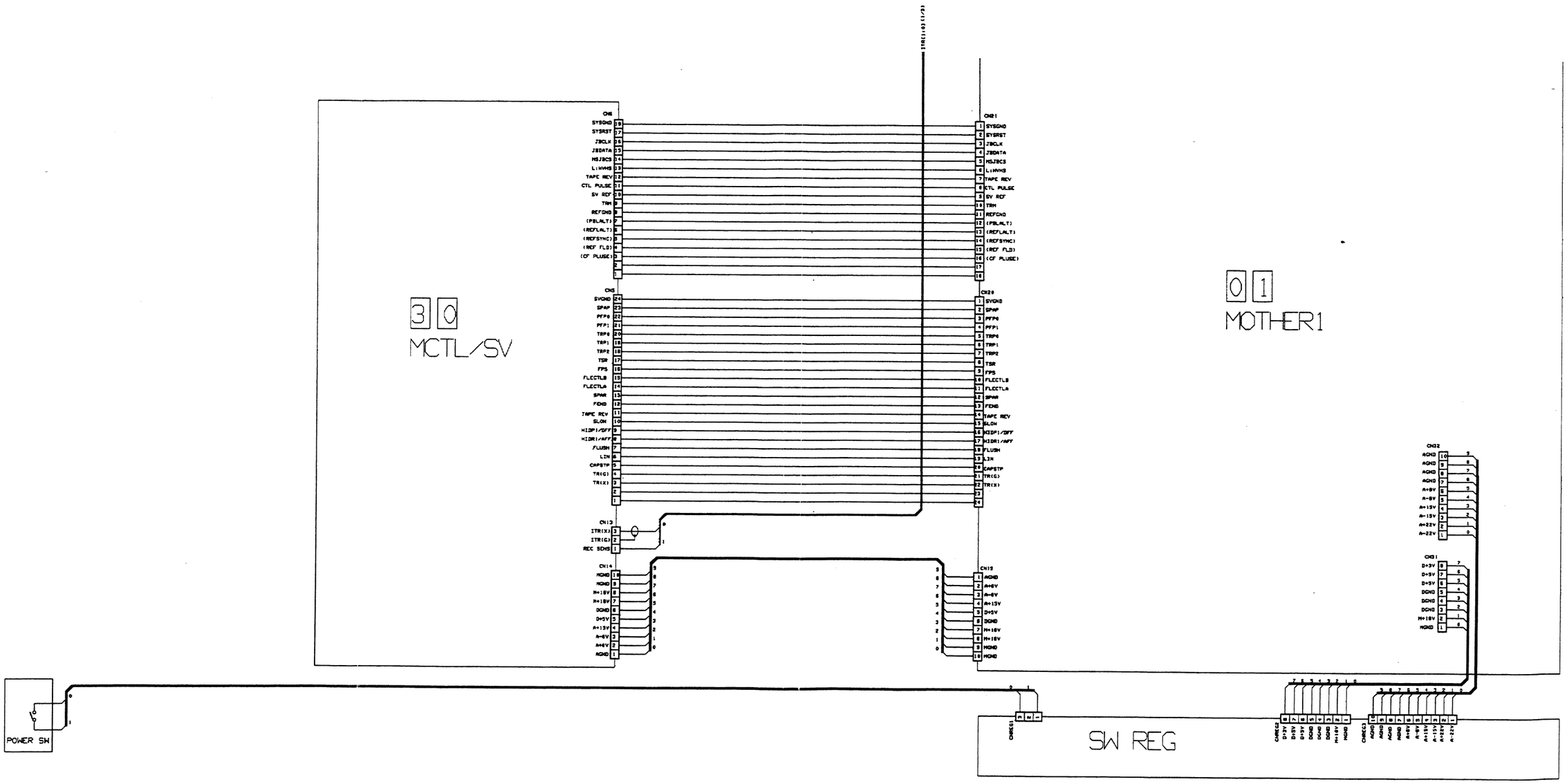

4-26

— DIAGRAM 2/3 —

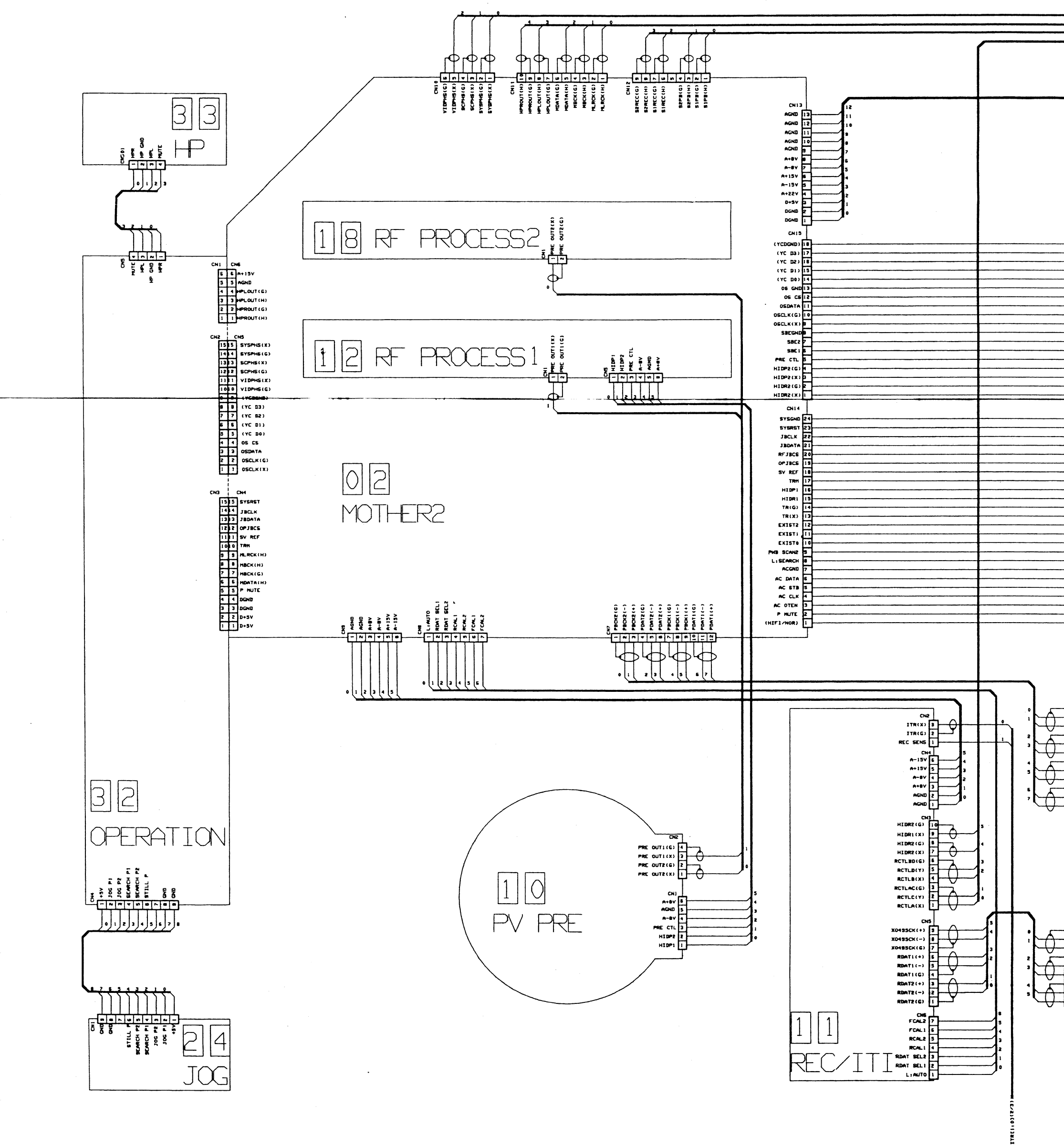
33 HP
CN20 HPR HP GND HPL MUTE
CN5 MUTE HPL HP GND HPR
CN1 CN6
6 A+15V
5 AGND
4 MPLOUT(G)
3 MPLOUT(H)
2 MPROUT(G)
1 MPROUT(H)
CN2 CN5
SYSPHS(X)
SYSPHS(G)
SCPHS(X)
SCPHS(G)
VIDPHS(X)
VIDPHS(G)
(YCDGND)
(YC D3)
(YC D2)
(YC D1)
(YC D0)
OS CS
OSDATA
OSCLK(G)
OSCLK(X)
CN3 CN4
SYSRST
JBCLK
JBDATA
OPJBCS
SV REF
TRM
MLRCK(H)
MBCK(H)
MBCK(G)
MDATA(H)
P MUTE
DGND
DGND
D+5V
D+5V
32 OPERATION
CN4 +5V JOG P1 JOG P2 SEARCH P1 SEARCH P2 STILL P GND GND
CN1 GND GND STILL P2 SEARCH P2 SEARCH P1 JOG P2 JOG P1 +5V
24 JOG
18 RF PROCESS2
CN1 PRE OUT1(X) PRE OUT1(G)
12 RF PROCESS1
CN1 PRE OUT1(X) PRE OUT1(G)
CN5 HIDP1 HIDP2 PRE CTL A-8V AGND A+8V
02 MOTHER2
CN9 AGND AGND A+8V A-8V A+15V A-15V
CN8 L;AUTO RDAT SEL1 RDAT SEL2 RCAL1 RCAL2 FCAL1 FCAL2
CN7 PBCKE(G) PBCK2(-) PBCK2(+) PDAT2(G) PDAT2(-) PDAT2(+) PBCK1(G) PBCK1(-) PBCK1(+) PDAT1(G) PDAT1(-) PDAT1(+)
10 PV PRE
CN2 PRE OUT1(G) PRE OUT1(X) PRE OUT2(G) PRE OUT2(X)
CNJ A+8V AGND A-8V PRE CTL HIDP2 HIDP1
CN13
AGND AGND AGND AGND AGND A+8V A-8V A+15V A-15V A+22V D+5V DGND DGND
CN15
(YCDGND) (YC D3) (YC D2) (YC D1) (YC D0) OS GND OS CS OSDATA OSCLK(G) OSCLK(X) SBEGND SBE2 SBE1 PRE CTL HIDP2(G) HIDP2(X) HIDR2(G) HIDR2(X)
CN14
SYSGND SYSRST JBCLK JBDATA RFJBCS OPJBCS SV REF TRM HIDP1 HIDR1 TR(G) TR(X) EXIST2 EXIST1 EXIST0 PWB SCAN2 L;SEARCH ACGND AC DATA AC STB AC CLK AC OTEN P MUTE (HIF1/NOR)
11 REC/ITI
CN2 ITR(X) ITR(G) REC SENS
CN4 A-15V A+15V A-8V A+8V AGND AGND
CN3 HIDR2(G) HIDR1(X) HIDR2(G) HIDR2(X) RCTLBD(G) RCTLB(Y) RCTLB(X) RCTLAC(G) RCTLC(Y) RCTLA(X)
CN5 X0455CK(+) X0455CK(-) X0455CK(G) RDAT1(+) RDAT1(-) RDAT1(G) RDAT2(+) RDAT2(-) RDAT2(G)
CN6 FCAL2 FCAL1 RCAL2 RCAL1 RDAT SEL2 RDAT SEL1 L;AUTO
ITR(1:0)(2/3)

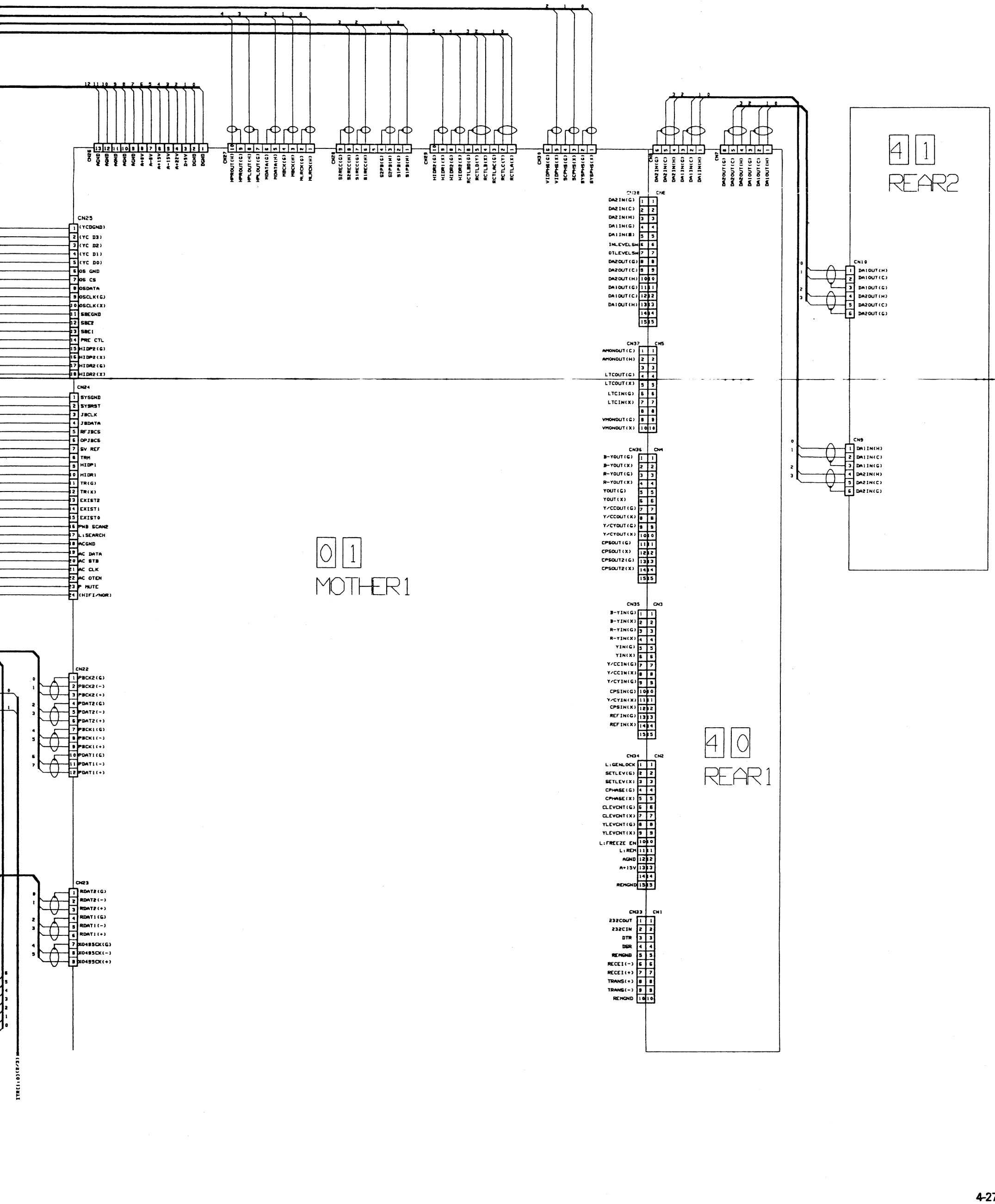
CN26
AGND
AGND
AGND
AGND
AGND
A+8V
A-8V
A+15V
A-15V
A+22V
D+5V
DGND
DGND
CN27
HPROUT(H)
HPROUT(G)
HPLOUT(H)
HPLOUT(G)
MDATA(G)
MDATA(H)
MBCK(G)
MBCK(H)
MLRCK(G)
MLRCK(H)
CN28
S2REC(G)
S2REC(H)
S1REC(G)
S1REC(H)
S2PB(G)
S2PB(H)
S1PB(G)
S1PB(H)
CN29
HIDR2(G)
HIDR1(X)
HIDR2(G)
HIDR2(X)
RCTLB0(G)
RCTLD(Y)
RCTLB1(X)
RCTLA0(G)
RCTLC(Y)
RCTLA1(X)
CN30
VIDPHS(G)
VIDPHS(X)
SCPHS(G)
SCPHS(X)
SYSPHS(G)
SYSPHS(X)
CN8
DA2IN(G)
DA2IN(C)
DA2IN(H)
DA1IN(G)
DA1IN(C)
DA1IN(H)
CN7
DA2OUT(G)
DA2OUT(C)
DA2OUT(H)
DA1OUT(G)
DA1OUT(C)
DA1OUT(H)
CN25
(YCDGND)
(YC D3)
(YC D2)
(YC D1)
(YC D0)
OS GND
OS CS
OSDATA
OSCLK(G)
OSCLK(X)
SBEGND
SBE2
SBE1
PRE CTL
HIDP2(G)
HIDP2(X)
HIDR2(G)
HIDR2(X)
CN24
SYSGND
SYSRST
JBCLK
JBDATA
RFJBCS
OPJBCS
SV REF
TRM
HIDP1
HIDR1
TR(G)
TR(X)
EXIST2
EXIST1
EXIST0
PWB SCAN2
L:SEARCH
ACGND
AC DATA
AC STB
AC CLK
AC OTEN
P MUTE
(HIFI/NOR)
CN22
PBCK2(G)
PBCK2(-)
PBCK2(+)
PDAT2(G)
PDAT2(-)
PDAT2(+)
PBCK1(G)
PBCK1(-)
PBCK1(+)
PDAT1(G)
PDAT1(-)
PDAT1(+)
CN23
RDAT2(G)
RDAT2(-)
RDAT2(+)
RDAT1(G)
RDAT1(-)
RDAT1(+)
X0485CK(G)
X0485CK(-)
X0485CK(+)
ITR(1:0)(2/3)
CN38
CN6
DA2IN(G)
DA2IN(C)
DA2IN(H)
DA1IN(G)
DA1IN(C)
DA1IN(H)
INLEVELSW
OTLEVELSW
DA2OUT(G)
DA2OUT(C)
DA2OUT(H)
DA1OUT(G)
DA1OUT(C)
DA1OUT(H)
CN37
CN5
AMONOUT(C)
AMONOUT(H)
LTCOUT(G)
LTCOUT(X)
LTCIN(G)
LTCIN(X)
VMONOUT(G)
VMONOUT(X)
CN36
CN4
B-YOUT(G)
B-YOUT(X)
R-YOUT(G)
R-YOUT(X)
YOUT(G)
YOUT(X)
Y/CCOUT(G)
Y/CCOUT(X)
Y/CYOUT(G)
Y/CYOUT(X)
CPSOUT(G)
CPSOUT(X)
CPSOUT2(G)
CPSOUT2(X)
CN35
CN3
B-YIN(G)
B-YIN(X)
R-YIN(G)
R-YIN(X)
YIN(G)
YIN(X)
Y/CCIN(G)
Y/CCIN(X)
Y/CYIN(G)
CPSIN(G)
Y/CYIN(X)
CPSIN(X)
REFIN(G)
REFIN(X)
CN34
CN2
L:GENLOCK
SETLEV(G)
SETLEV(X)
CPHASE(G)
CPHASE(X)
CLEVCNT(G)
CLEVCNT(X)
YLEVCNT(G)
YLEVCNT(X)
L:FREEZE EN
L:REM
AGND
A+15V
REMGND
CN33
CN1
232COUT
232CIN
DTR
DSR
REMGND
RECEI(-)
RECEI(+)
TRANS(+)
TRANS(-)
REMGND
CN10
DA1OUT(H)
DA1OUT(C)
DA1OUT(G)
DA2OUT(H)
DA2OUT(C)
DA2OUT(G)
CN9
DA1IN(H)
DA1IN(C)
DA1IN(G)
DA2IN(H)
DA2IN(C)
DA2IN(G)
4 1
REAR2
0 1
MOTHER1
4 0
REAR1

— DIAGRAM 3/3 —

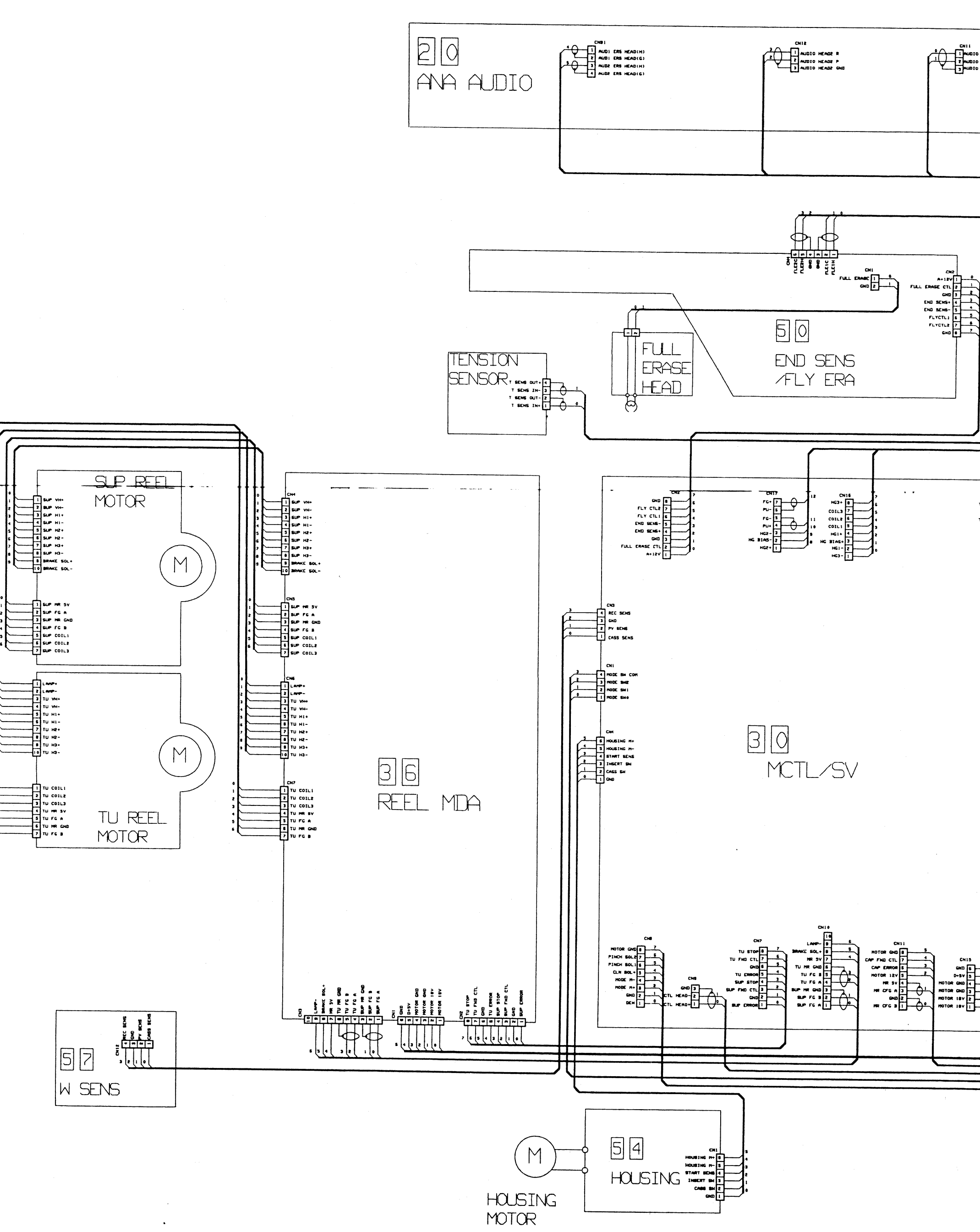
20
ANA AUDIO
CN81
AUDI ERS HEAD(H)
AUDI ERS HEAD(G)
AUD2 ERS HEAD(H)
AUD2 ERS HEAD(G)
CN12
AUDIO HEADZ R
AUDIO HEADZ P
AUDIO HEADZ GND
CN11
AUDIO
AUDIO
AUDIO
CH
FLERC
FLERH
GND
GND
FLE1C
FLE1H
CN1
FULL ERASE
GND
CN2
A+12V
FULL ERASE CTL
GND
END SENS+
END SENS-
FLYCTL1
FLYCTL2
GND
50
END SENS
/FLY ERA
TENSION
SENSOR
T SENS OUT+
T SENS IN-
T SENS OUT-
T SENS IN+
FULL
ERASE
HEAD
SUP REEL
MOTOR
SUP VH+
SUP VH-
SUP H1+
SUP H1-
SUP H2+
SUP H2-
SUP H3+
SUP H3-
BRAKE SOL+
BRAKE SOL-
SUP MR 5V
SUP FG A
SUP MR GND
SUP FG B
SUP COIL1
SUP COIL2
SUP COIL3
LAMP+
LAMP-
TU VH+
TU VH-
TU H1+
TU H1-
TU H2+
TU H2-
TU H3+
TU H3-
TU COIL1
TU COIL2
TU COIL3
TU MR 5V
TU FG A
TU MR GND
TU FG B
TU REEL
MOTOR
M
CN4
CN5
CN6
CN7
36
REEL MDA
CN2
GND
FLY CTL2
FLY CTL1
END SENS-
END SENS+
GND
FULL ERASE CTL
A+12V
CN17
FG+
PU-
FG-
PU+
HG2-
HG BIAS-
HG2+
CN16
HG3+
COIL3
COIL2
COIL1
HG1+
HG BIAS+
HG1-
HG3-
CN3
REC SENS
GND
PV SENS
CASS SENS
CN1
MODE SW COM
MODE SW2
MODE SW1
MODE SW0
CN4
HOUSING H+
HOUSING H-
START SENS
INSERT SW
CASS SW
GND
30
MCTL/SV
CN8
MOTOR GND
PINCH SOLE
PINCH SOL1
CLN SOL+
MODE M-
MODE M+
GND
DEW
GND
CTL HEAD-
CTL HEAD+
CN7
TU STOP
TU FWD CTL
GND
TU ERROR
SUP STOP
SUP FWD CTL
GND
SUP ERROR
CN10
LAMP-
BRAKE SOL+
MR 5V
TU MR GND
TU FG B
TU FG A
SUP MR GND
SUP FG B
SUP FG A
CN11
MOTOR GND
CAP FWD CTL
CAP ERROR
MOTOR 12V
MR 5V
MR CFG A
GND
MR CFG B
CN15
GND
D+5V
MOTOR GND
MOTOR GND
MOTOR 18V
MOTOR 18V
CN3
LAMP-
BRAKE SOL+
MR 5V
TU MR GND
TU FG B
TU FG A
SUP MR GND
SUP FG B
SUP FG A
CN1
GND
D+5V
MOTOR GND
MOTOR GND
MOTOR 18V
MOTOR 18V
CN2
TU STOP
TU FWD CTL
GND
TU ERROR
SUP STOP
SUP FWD CTL
GND
SUP ERROR
CN12
REC SENS
GND
PV SENS
CASS SENS
57
W SENS
M
54
HOUSING
HOUSING
MOTOR
CN1
HOUSING H+
HOUSING H-
START SENS
INSERT SW
CASS SW
GND

CN11
1 AUDIO HEAD1 R
2 AUDIO HEAD1 P
3 AUDIO HEAD1 GND

TO
1 0
PV PRE

PB B
PB A
PB C
PB D
REC C
REC D
FE2
MIDDLE DRUM
ROTARY TRANS
FE1
REC B
REC A

FROM
1 1
REC/ITI
CN1

CONNECTOR
LOWER DRUM

CN2
A+12V
FULL ERASE CTL
GND
END SENS+
END SENS-
FLYCTL1
FLYCTL2
GND

CN12
T SENS OUT+
T SENS IN-
T SENS OUT-
T SENS IN+

DRUM MOTOR
MG3-
MG1-
MG BIAS+
MG1+
COIL1
COIL2
COIL3
MG3+
MG2+
MG BIAS-
MG2-
PU+
FG-
PU-
FG+

CLEANER SOL

CTL HEAD
AUDIO HEAD1
AUDIO HEAD2
AUD1 ERS HEAD
AUD2 ERS HEAD
56
A/C HEAD
CN11

CN15
GND
D+5V
MOTOR GND
MOTOR GND
MOTOR 18V
MOTOR 18V

CAP MOTOR
MOTOR GND
CAP FWD CTL
CAP ERROR
MOTOR 18V
HR 5V
HR CFG A
GND
HR CFG B

55
MECHA TERM
CN10
MOTOR GND
PINCH SOL2
PINCH SOL1
CN8
CLN SOL-
CLN SOL+
CN8
MODE M-
MODE M+
CN7
GND
DEW
CN6
MOTOR GND
PINCH SOL2
PINCH SOL1
CLN SOL+
MODE M-
MODE M+
GND
DEW

DEW SENSOR

53
MODE MOTOR
CN6
MODE M+
MODE M-

PINCH SOL

MODE SENSOR
MODE SW0
MODE SW1
MODE SW2
MODE SW COM

4.16 MOTHER-1 SCHEMATIC DIAGRAMS

— DIAGRAM 1/4 —

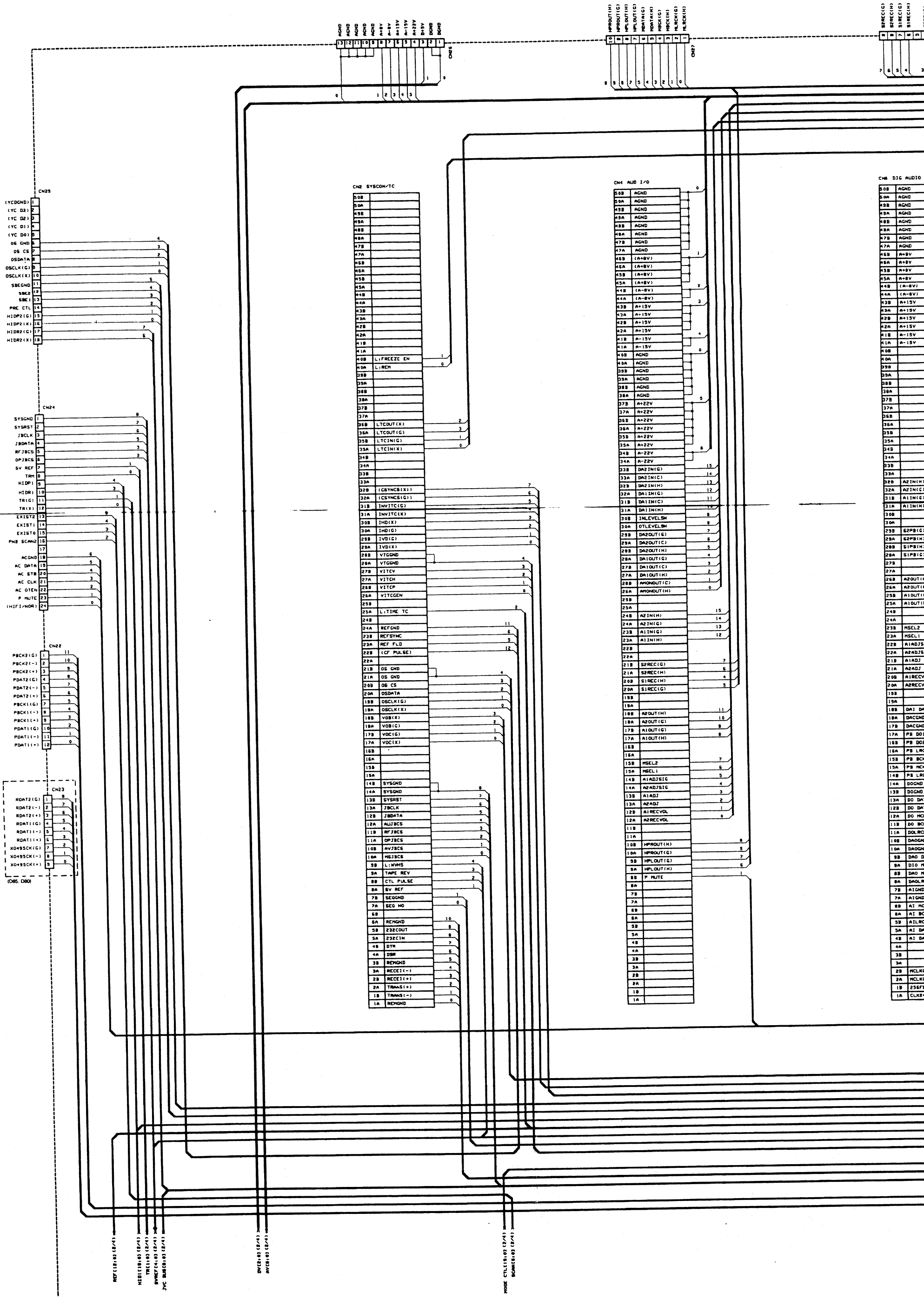

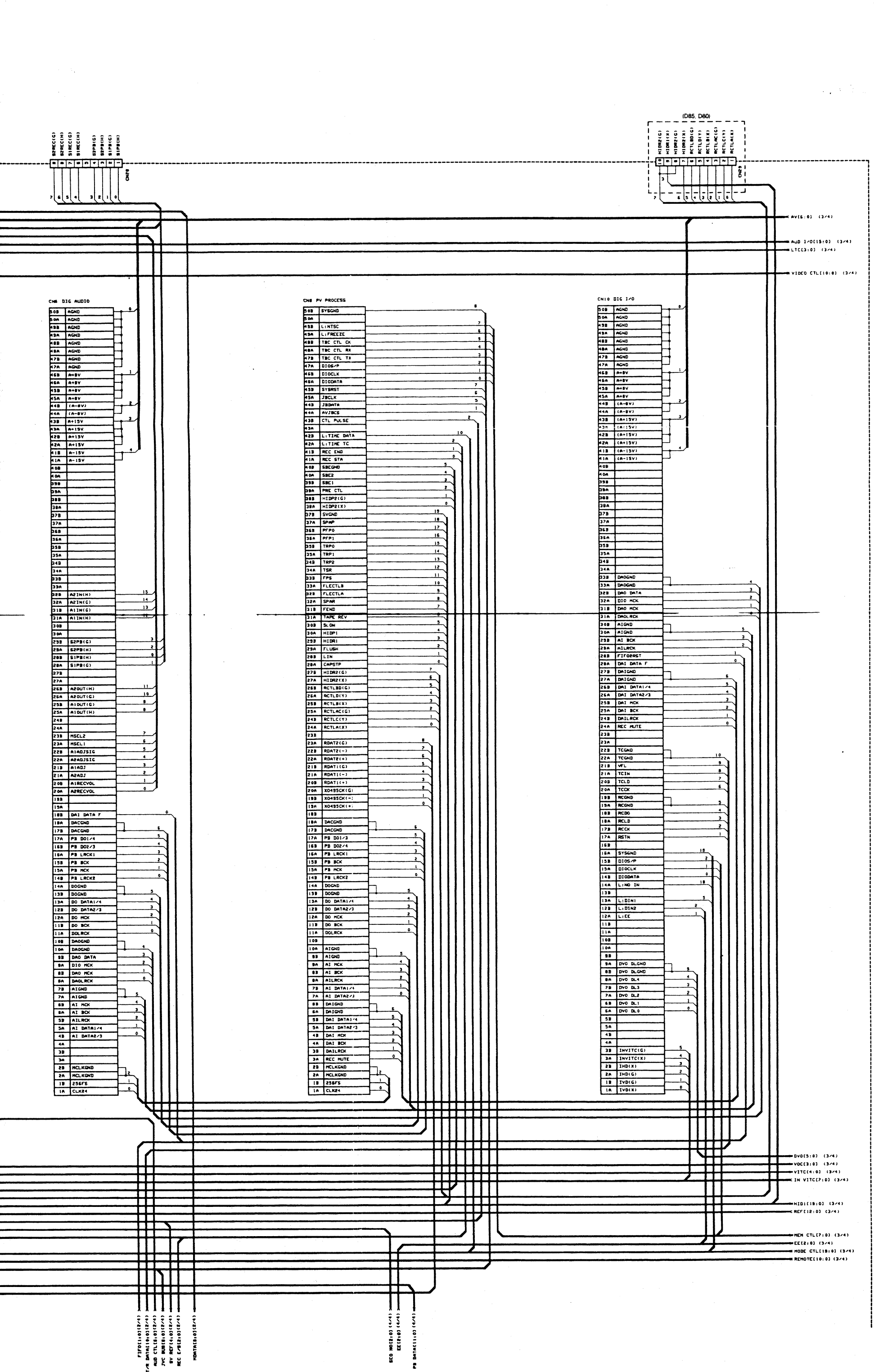
(D85, D80)
CN29
B2REC(G)
B2REC(H)
S1REC(G)
S1REC(H)
E2PB(G)
E2PB(H)
S1PB(C)
S1PB(H)
HIDR2(G)
HIDR1(X)
HIDR2(G)
HIDR2(X)
RCTLBD(G)
RCTLD(Y)
RCTLB(X)
RCTLAC(G)
RCTLC(Y)
RCTLA(X)
AV[6:0] (3/4)
AUD I/O[15:0] (3/4)
LTC[3:0] (3/4)
VIDEO CTL[10:0] (3/4)
CN8 DIG AUDIO
50B AGND
50A AGND
49B AGND
49A AGND
48B AGND
48A AGND
47B AGND
47A AGND
46B A+8V
46A A+8V
45B A+8V
45A A+8V
44B (A-8V)
44A (A-8V)
43B A+15V
43A A+15V
42B A+15V
42A A+15V
41B A-15V
41A A-15V
32B A2IN(H)
32A A2IN(G)
31B A1IN(G)
31A A1IN(H)
29B S2PB(G)
29A S2PB(H)
28B S1PB(H)
28A S1PB(G)
26B A2OUT(H)
26A A2OUT(G)
25B A1OUT(G)
25A A1OUT(H)
23B MSEL2
23A MSEL1
22B A1ADJSIG
22A A2ADJSIG
21B A1ADJ
21A A2ADJ
20B A1RECVOL
20A A2RECVOL
18B DAI DATA F
18A DACGND
17B DACGND
17A PB DO1/4
16B PB DO2/3
16A PB LRCK1
15B PB BCK
15A PB MCK
14B PB LRCK2
14A DOGND
13B DOGND
13A DO DATA1/4
12B DO DATA2/3
12A DO MCK
11B DO BCK
11A DOLRCK
10B DAOGND
10A DAOGND
9B DAO DATA
9A DIO MCK
8B DAO MCK
8A DAOLRCK
7B AIGND
7A AIGND
6B AI MCK
6A AI BCK
5B AILRCK
5A AI DATA1/4
4B AI DATA2/3
2B MCLKGND
2A MCLKGND
1B 256FS
1A CLK24
CN8 PV PROCESS
50B SYSGND
49B L:NTSC
49A L:FREEZE
48B TBC CTL CK
48A TBC CTL RX
47B TBC CTL TX
47A DIOS/P
46B DIOCLK
46A DIODATA
45B SYSRST
45A JBCLK
44B JBDATA
44A AVJBCS
43B CTL PULSE
42B L:TIME DATA
42A L:TIME TC
41B REC END
41A REC STA
40B SBEGND
40A SBE2
39B SBE1
39A PRE CTL
38B HIDP2(G)
38A HIDP2(X)
37B SVGND
37A SPAP
36B PFP0
36A PFP1
35B TRP0
35A TRP1
34B TRP2
34A TSR
33B FPS
33A FLECTLB
32B FLECTLA
32A SPAR
31B FEND
31A TAPE REV
30B SLOW
30A HIDP1
29B HIDR1
29A FLUSH
28B LIN
28A CAPSTP
27B HIDR2(G)
27A HIDR2(X)
26B RCTLBD(G)
26A RCTLD(Y)
25B RCTLB(X)
25A RCTLAC(G)
24B RCTLC(Y)
24A RCTLA(X)
23B
23A RDAT2(G)
22B RDAT2(-)
22A RDAT2(+)
21B RDAT1(G)
21A RDAT1(-)
20B RDAT1(+)
20A X0495CK(G)
19B X0495CK(-)
19A X0495CK(+)
18B
18A DACGND
17B DACGND
17A PB DO1/3
16B PB DO2/4
16A PB LRCK1
15B PB BCK
15A PB MCK
14B PB LRCK2
14A DOGND
13B DOGND
13A DO DATA1/4
12B DO DATA2/3
12A DO MCK
11B DO BCK
11A DOLRCK
10B
10A AIGND
9B AIGND
9A AI MCK
8B AI BCK
8A AILRCK
7B AI DATA1/4
7A AI DATA2/3
6B DAIGND
6A DAIGND
5B DAI DATA1/4
5A DAI DATA2/3
4B DAI MCK
4A DAI BCK
3B DAILRCK
3A REC MUTE
2B MCLKGND
2A MCLKGND
1B 256FS
1A CLK24
CN10 DIG I/O
50B AGND
50A AGND
49B AGND
49A AGND
48B AGND
48A AGND
47B AGND
47A AGND
46B A+8V
46A A+8V
45B A+8V
45A A+8V
44B (A-8V)
44A (A-8V)
43B (A+15V)
43A (A+15V)
42B (A+15V)
42A (A+15V)
41B (A-15V)
41A (A-15V)
33B DAOGND
33A DAOGND
32B DAO DATA
32A DIO MCK
31B DAO MCK
31A DAOLRCK
30B AIGND
30A AIGND
29B AI BCK
29A AILRCK
28B FIFORRST
28A DAI DATA F
27B DAIGND
27A DAIGND
26B DAI DATA1/4
26A DAI DATA2/3
25B DAI MCK
25A DAI BCK
24B DAILRCK
24A REC MUTE
22B TCGND
22A TCGND
21B VFL
21A TCIN
20B TCLD
20A TCCK
19B RCGND
19A RCGND
18B RCDO
18A RCLD
17B RCCK
17A RSTN
16B
15B DIOS/P
15A DIOCLK
14B DIODATA
14A L:NO IN
13B
13A L:DIN1
12B L:DIN2
12A L:EE
11B
11A
10B
10A
9B
9A DVO DLGND
8B DVO DLGND
8A DVO DL4
7B DVO DL3
7A DVO DL2
6B DVO DL1
6A DVO DL0
5B
5A
4B
4A
3B INVITC(G)
3A INVITC(X)
2B IHD(X)
2A IHD(G)
1B IVD(G)
1A IVD(X)
DVO[5:0] (3/4)
VOC[3:0] (3/4)
VITC[4:0] (3/4)
IN VITC[7:0] (3/4)
HID1[19:0] (3/4)
REF[12:0] (3/4)
MEM CTL[7:0] (3/4)
EE[2:0] (3/4)
MODE CTL[19:0] (3/4)
REMOTE[10:0] (3/4)
FIFO[1:0](2/4)
T/M DATA[10:0](2/4)
AUD CTL[8:0](2/4)
JVC BURST[8:0](2/4)
BV REF[4:0](2/4)
REC E/ME[2:0](2/4)
MDATA[8:0](2/4)
SEQ MOE[2:0] (4/4)
EE[2:0] (4/4)
PB DATA[11:0] (4/4)

— DIAGRAM 2/4 —

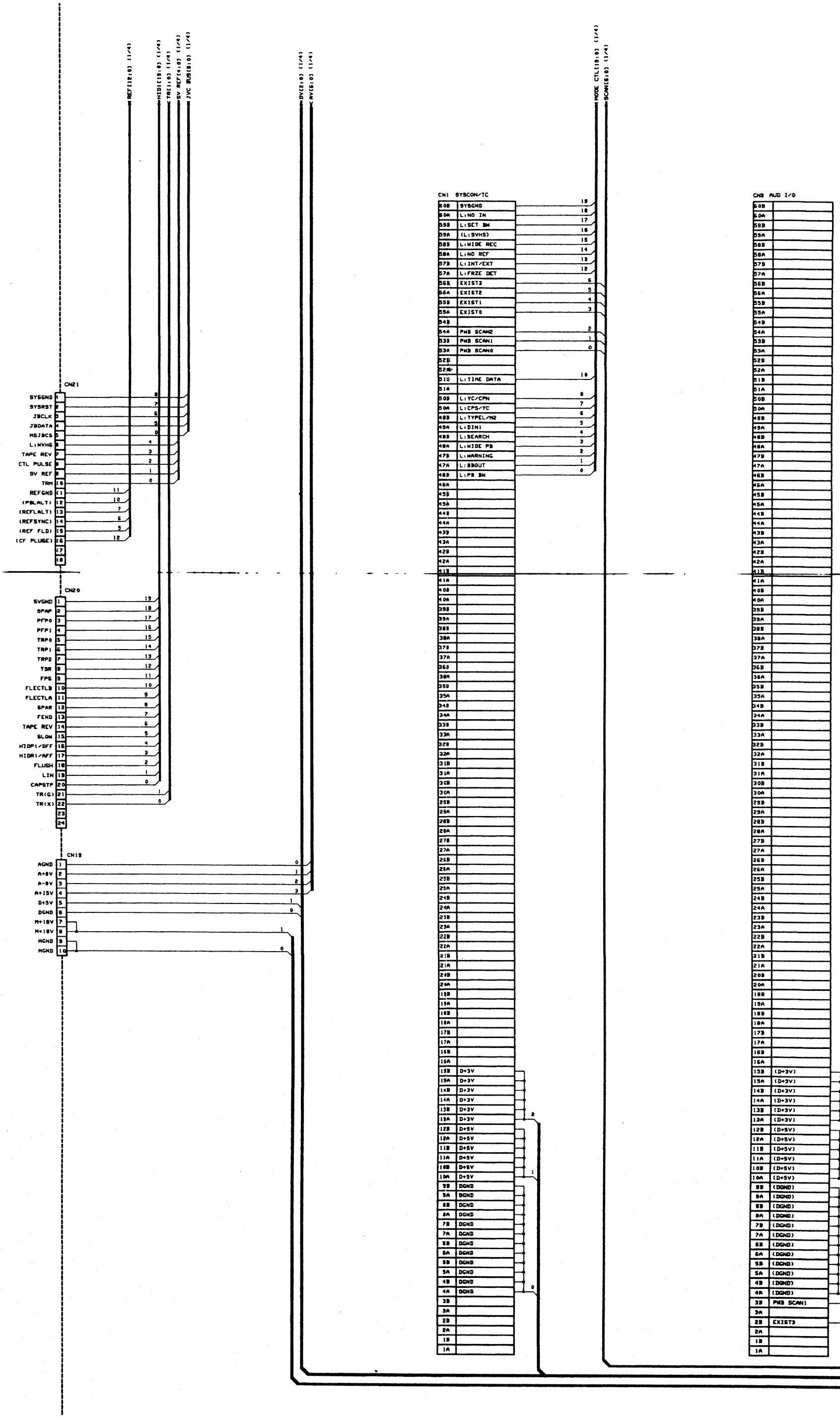
REF[12:0] (1/4)
HIDI[19:0] (1/4)
TR[1:0] (1/4)
SV REF[4:0] (1/4)
JVC BUS[8:0] (1/4)
DV[2:0] (1/4)
AV[6:0] (1/4)
MODE CTL[19:0] (1/4)
SCAN[6:0] (1/4)
CN21
SYSGND
SYSRST
JBCLK
JBDATA
MSJBCS
L:MVHS
TAPE REV
CTL PULSE
SV REF
TRM
REFGND
(PBLALT)
(REFLALT)
(REFSYNC)
(REF FLD)
(CF PLUSE)
CN20
SVGND
SPAP
PFP0
PFP1
TRP0
TRP1
TRP2
TSR
FPS
FLECTLB
FLECTLA
SPAR
FEND
TAPE REV
SLOW
HIDP1/DFF
HIDR1/AFF
FLUSH
LIN
CAPSTP
TR(G)
TR(X)
CN19
AGND
A+8V
A-8V
A+15V
D+5V
DGND
M+18V
M+18V
MGND
MGND
CN1 SYSCON/TC
SYSGND
L:NO IN
L:SET BW
(L:SVHS)
L:WIDE REC
L:NO REF
L:INT/EXT
L:FRZE DET
EXIST3
EXIST2
EXIST1
EXIST0
PWB SCAN2
PWB SCAN1
PWB SCAN0
L:TIME DATA
L:YC/CPN
L:CPS/YC
L:TYPEL/M2
L:DIN1
L:SEARCH
L:WIDE PB
L:WARNING
L:BBOUT
L:PB BW
D+3V
D+5V
DGND
CN8 AUD I/O
(D+3V)
(D+5V)
(DGND)
PWB SCAN1
EXIST3

CN8 AUD I/O

60B	
60A	
59B	
59A	
58B	
58A	
57B	
57A	
56B	
56A	
55B	
55A	
54B	
54A	
53B	
53A	
52B	
52A	
51B	
51A	
50B	
50A	
49B	
49A	
48B	
48A	
47B	
47A	
46B	
46A	
45B	
45A	
44B	
44A	
43B	
43A	
42B	
42A	
41B	
41A	
40B	
40A	
39B	
39A	
38B	
38A	
37B	
37A	
36B	
36A	
35B	
35A	
34B	
34A	
33B	
33A	
32B	
32A	
31B	
31A	
30B	
30A	
29B	
29A	
28B	
28A	
27B	
27A	
26B	
26A	
25B	
25A	
24B	
24A	
23B	
23A	
22B	
22A	
21B	
21A	
20B	
20A	
19B	
19A	
18B	
18A	
17B	
17A	
16B	
16A	
15B	(D+3V)
15A	(D+3V)
14B	(D+3V)
14A	(D+3V)
13B	(D+3V)
13A	(D+3V)
12B	(D+5V)
12A	(D+5V)
11B	(D+5V)
11A	(D+5V)
10B	(D+5V)
10A	(D+5V)
9B	(DGND)
9A	(DGND)
8B	(DGND)
8A	(DGND)
7B	(DGND)
7A	(DGND)
6B	(DGND)
6A	(DGND)
5B	(DGND)
5A	(DGND)
4B	(DGND)
4A	(DGND)
3B	PWB SCAN1
3A	
2B	EXIST3
2A	
1B	
1A	

CN5 DIG AUDIO

60B	FIFOZRST
60A	TCGND
59B	TCGND
59A	VFL
58B	TCIN
58A	TCLD
57B	TCCK
57A	RCGND
56B	RCGND
56A	RCDO
55B	RCLD
55A	RCCK
54B	RSTN
54A	ACGND
53B	ACGND
53A	AC DATA
52B	AC STB
52A	AC CLK
51B	AC OTEN
51A	P MUTE
50B	(HIFI/NOR)
50A	
49B	SYSGND
49A	SYSGND
48B	SYSRST
48A	JBCLK
47B	JBDATA
47A	AUJBCS
46B	SV REF
46A	REC END
45B	REC STA
45A	
44B	
44A	
43B	MDATA(G)
43A	MDATA(H)
42B	MBCK(H)
42A	MBCK(G)
41B	MLRCK(G)
41A	MLRCK(H)
40B	
40A	
39B	
39A	
38B	
38A	
37B	
37A	
36B	
36A	
35B	
35A	
34B	
34A	
33B	
33A	
32B	
32A	
31B	
31A	
30B	
30A	
29B	
29A	
28B	
28A	
27B	
27A	
26B	
26A	
25B	
25A	
24B	
24A	
23B	
23A	
22B	
22A	
21B	
21A	
20B	
20A	
19B	
19A	
18B	
18A	
17B	
17A	
16B	
16A	
15B	(D+3V)
15A	(D+3V)
14B	(D+3V)
14A	(D+3V)
13B	(D+3V)
13A	(D+3V)
12B	D+5V
12A	D+5V
11B	D+5V
11A	D+5V
10B	D+5V
10A	D+5V
9B	DGND
9A	DGND
8B	DGND
8A	DGND
7B	DGND
7A	DGND
6B	DGND
6A	DGND
5B	DGND
5A	DGND
4B	DGND
4A	DGND
3B	PWB SCAN1
3A	
2B	
2A	EXIST2
1B	
1A	

FIFO[1:0] (1/4)
T/R DATA[10:0](1/4)
AUD CTL[6:0] (1/4)
JVC BUS[8:0] (1/4)
SV REF[4:0] (1/4)
REC E/SE[2:0] (1/4)
MDATA[8:0] (1/4)

SCAN[6:0] (4/4)
DV[2:0] (4/4)
MV[1:0] (4/4)

— DIAGRAM 3/4 —

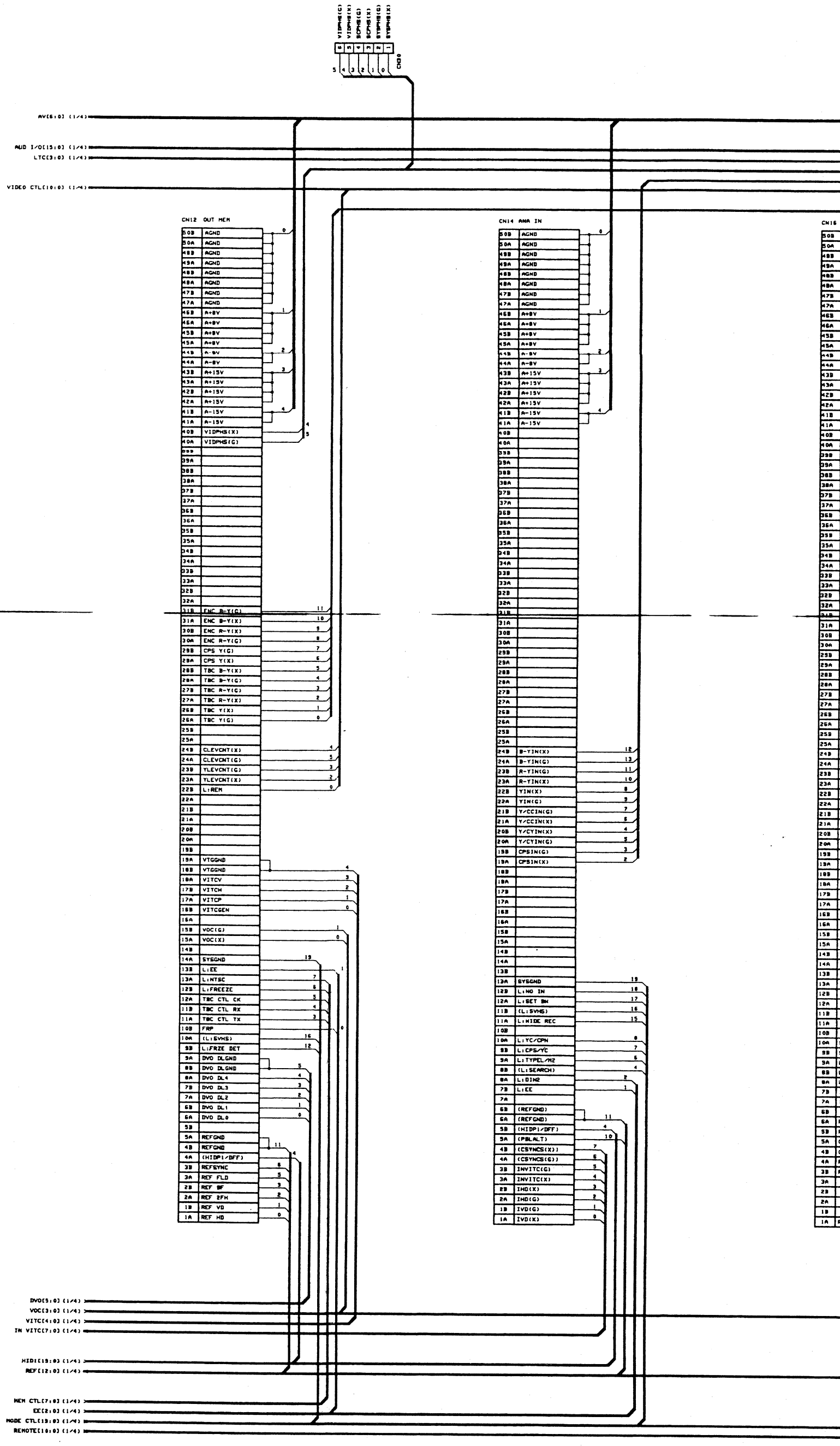
CN30
VIDPHS(G)
VIDPHS(X)
SCPHS(G)
SCPHS(X)
SYSPHS(G)
SYSPHS(X)
AV[6:0] (1/4)
AUD I/O[15:0] (1/4)
LTC[3:0] (1/4)
VIDEO CTL[10:0] (1/4)
CN12 OUT MEM
50B AGND
50A AGND
49B AGND
49A AGND
48B AGND
48A AGND
47B AGND
47A AGND
46B A+8V
46A A+8V
45B A+8V
45A A+8V
44B A-8V
44A A-8V
43B A+15V
43A A+15V
42B A+15V
42A A+15V
41B A-15V
41A A-15V
40B VIDPHS(X)
40A VIDPHS(G)
39B
39A
38B
38A
37B
37A
36B
36A
35B
35A
34B
34A
33B
33A
32B
32A
31B ENC B-Y(G)
31A ENC B-Y(X)
30B ENC R-Y(X)
30A ENC R-Y(G)
29B CPS Y(G)
29A CPS Y(X)
28B TBC B-Y(X)
28A TBC B-Y(G)
27B TBC R-Y(G)
27A TBC R-Y(X)
26B TBC Y(X)
26A TBC Y(G)
25B
25A
24B CLEVCNT(X)
24A CLEVCNT(G)
23B YLEVCNT(G)
23A YLEVCNT(X)
22B L:REM
22A
21B
21A
20B
20A
19B
19A VTGGND
18B VTGGND
18A VITCV
17B VITCH
17A VITCP
16B VITCGEN
16A
15B VOC(G)
15A VOC(X)
14B
14A SYSGND
13B L:EE
13A L:NTSC
12B L:FREEZE
12A TBC CTL CK
11B TBC CTL RX
11A TBC CTL TX
10B FRP
10A (L:SVHS)
9B L:FRZE DET
9A DVO DLGND
8B DVO DLGND
8A DVO DL4
7B DVO DL3
7A DVO DL2
6B DVO DL1
6A DVO DL0
5B
5A REFGND
4B REFGND
4A (HIDP1/DFF)
3B REFSYNC
3A REF FLD
2B REF BF
2A REF 2FH
1B REF VD
1A REF HD
CN14 ANA IN
50B AGND
50A AGND
49B AGND
49A AGND
48B AGND
48A AGND
47B AGND
47A AGND
46B A+8V
46A A+8V
45B A+8V
45A A+8V
44B A-8V
44A A-8V
43B A+15V
43A A+15V
42B A+15V
42A A+15V
41B A-15V
41A A-15V
40B
40A
39B
39A
38B
38A
37B
37A
36B
36A
35B
35A
34B
34A
33B
33A
32B
32A
31B
31A
30B
30A
29B
29A
28B
28A
27B
27A
26B
26A
25B
25A
24B B-YIN(X)
24A B-YIN(G)
23B R-YIN(G)
23A R-YIN(X)
22B YIN(X)
22A YIN(G)
21B Y/CCIN(G)
21A Y/CCIN(X)
20B Y/CYIN(X)
20A Y/CYIN(G)
19B CPSIN(G)
19A CPSIN(X)
18B
18A
17B
17A
16B
16A
15B
15A
14B
14A
13B
13A SYSGND
12B L:NO IN
12A L:SET BW
11B (L:SVHS)
11A L:WIDE REC
10B
10A L:YC/CPN
9B L:CPS/YC
9A L:TYPEL/M2
8B (L:SEARCH)
8A L:DIN2
7B L:EE
7A
6B (REFGND)
6A (REFGND)
5B (HIDP1/DFF)
5A (PBLALT)
4B (CSYNCS(X))
4A (CSYNCS(G))
3B INVITC(G)
3A INVITC(X)
2B IHD(X)
2A IHD(G)
1B IVD(G)
1A IVD(X)
CN16
DVO[5:0] (1/4)
VOC[3:0] (1/4)
VITC[4:0] (1/4)
IN VITC[7:0] (1/4)
HID[15:0] (1/4)
REF[12:0] (1/4)
MEM CTL[7:0] (1/4)
EE[2:0] (1/4)
MODE CTL[13:0] (1/4)
REMOTE[10:0] (1/4)

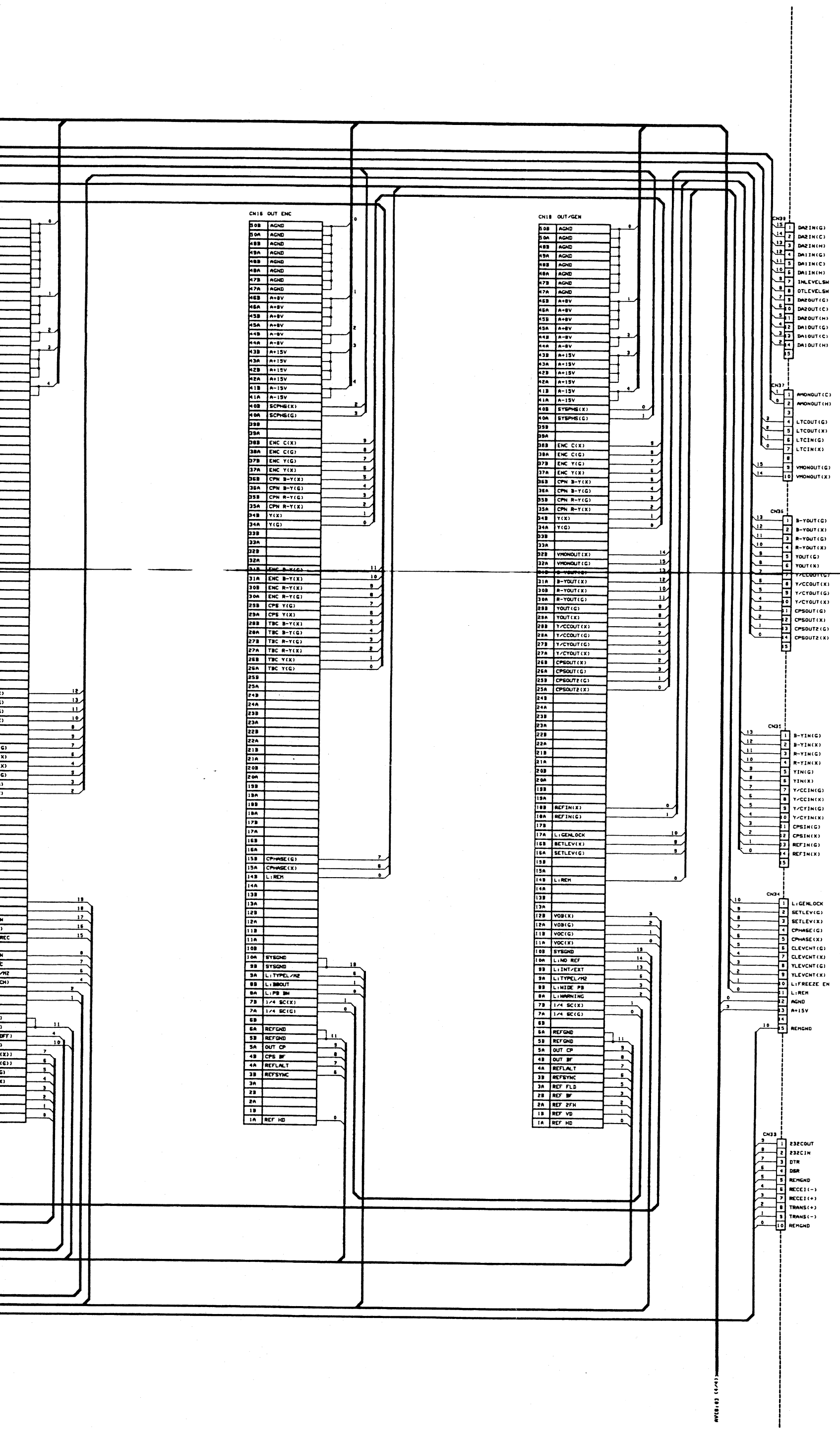
CN16 OUT ENC
50B AGND
50A AGND
49B AGND
49A AGND
48B AGND
48A AGND
47B AGND
47A AGND
46B A+8V
46A A+8V
45B A+8V
45A A+8V
44B A-8V
44A A-8V
43B A+15V
43A A+15V
42B A+15V
42A A+15V
41B A-15V
41A A-15V
40B SCPHS(X)
40A SCPHS(G)
39B
39A
38B ENC C(X)
38A ENC C(G)
37B ENC Y(G)
37A ENC Y(X)
36B CPN B-Y(X)
36A CPN B-Y(G)
35B CPN R-Y(G)
35A CPN R-Y(X)
34B Y(X)
34A Y(G)
33B
33A
32B
32A
31B ENC B-Y(G)
31A ENC B-Y(X)
30B ENC R-Y(X)
30A ENC R-Y(G)
29B CPS Y(G)
29A CPS Y(X)
28B TBC B-Y(X)
28A TBC B-Y(G)
27B TBC R-Y(G)
27A TBC R-Y(X)
26B TBC Y(X)
26A TBC Y(G)
25B
25A
24B
24A
23B
23A
22B
22A
21B
21A
20B
20A
19B
19A
18B
18A
17B
17A
16B
16A
15B CPHASE(G)
15A CPHASE(X)
14B L:REM
14A
13B
13A
12B
12A
11B
11A
10B
10A SYSGND
9B SYSGND
9A L:TYPEL/M2
8B L:BBOUT
8A L:PB BW
7B 1/4 SC(X)
7A 1/4 SC(G)
6B
6A REFGND
5B REFGND
5A OUT CP
4B CPS BF
4A REFLALT
3B REFSYNC
3A
2B
2A
1B
1A REF HD
CN18 OUT/GEN
50B AGND
50A AGND
49B AGND
49A AGND
48B AGND
48A AGND
47B AGND
47A AGND
46B A+8V
46A A+8V
45B A+8V
45A A+8V
44B A-8V
44A A-8V
43B A+15V
43A A+15V
42B A+15V
42A A+15V
41B A-15V
41A A-15V
40B SYSPHS(X)
40A SYSPHS(G)
39B
39A
38B ENC C(X)
38A ENC C(G)
37B ENC Y(G)
37A ENC Y(X)
36B CPN B-Y(X)
36A CPN B-Y(G)
35B CPN R-Y(G)
35A CPN R-Y(X)
34B Y(X)
34A Y(G)
33B
33A
32B VMONOUT(X)
32A VMONOUT(G)
31B B-YOUT(G)
31A B-YOUT(X)
30B R-YOUT(X)
30A R-YOUT(G)
29B YOUT(G)
29A YOUT(X)
28B Y/CCOUT(X)
28A Y/CCOUT(G)
27B Y/CYOUT(G)
27A Y/CYOUT(X)
26B CPSOUT(X)
26A CPSOUT(G)
25B CPSOUT2(G)
25A CPSOUT2(X)
24B
24A
23B
23A
22B
22A
21B
21A
20B
20A
19B
19A
18B REFIN(X)
18A REFIN(G)
17B
17A L:GENLOCK
16B SETLEV(X)
16A SETLEV(G)
15B
15A
14B L:REM
14A
13B
13A
12B VOB(X)
12A VOB(G)
11B VOC(G)
11A VOC(X)
10B SYSGND
10A L:NO REF
9B L:INT/EXT
9A L:TYPEL/M2
8B L:WIDE PB
8A L:WARNING
7B 1/4 SC(X)
7A 1/4 SC(G)
6B
6A REFGND
5B REFGND
5A OUT CP
4B OUT BF
4A REFLALT
3B REFSYNC
3A REF FLD
2B REF BF
2A REF 2FH
1B REF VD
1A REF HD
CN38
DA2IN(G)
DA2IN(C)
DA2IN(H)
DA1IN(G)
DA1IN(C)
DA1IN(H)
INLEVELSW
OTLEVELSW
DA2OUT(G)
DA2OUT(C)
DA2OUT(H)
DA1OUT(G)
DA1OUT(C)
DA1OUT(H)
CN37
AMONOUT(C)
AMONOUT(H)
LTCOUT(G)
LTCOUT(X)
LTCIN(G)
LTCIN(X)
VMONOUT(G)
VMONOUT(X)
CN36
B-YOUT(G)
B-YOUT(X)
R-YOUT(G)
R-YOUT(X)
YOUT(G)
YOUT(X)
Y/CCOUT(G)
Y/CCOUT(X)
Y/CYOUT(G)
Y/CYOUT(X)
CPSOUT(G)
CPSOUT(X)
CPSOUT2(G)
CPSOUT2(X)
CN35
B-YIN(G)
B-YIN(X)
R-YIN(G)
R-YIN(X)
YIN(G)
YIN(X)
Y/CCIN(G)
Y/CCIN(X)
Y/CYIN(G)
Y/CYIN(X)
CPSIN(G)
CPSIN(X)
REFIN(G)
REFIN(X)
CN34
L:GENLOCK
SETLEV(G)
SETLEV(X)
CPHASE(G)
CPHASE(X)
CLEVCNT(G)
CLEVCNT(X)
YLEVCNT(G)
YLEVCNT(X)
L:FREEZE EN
L:REM
AGND
A+15V
REMGND
CN33
232COUT
232CIN
DTR
DSR
REMGND
RECEI(-)
RECEI(+)
TRANS(+)
TRANS(-)
REMGND

— DIAGRAM 4/4 —

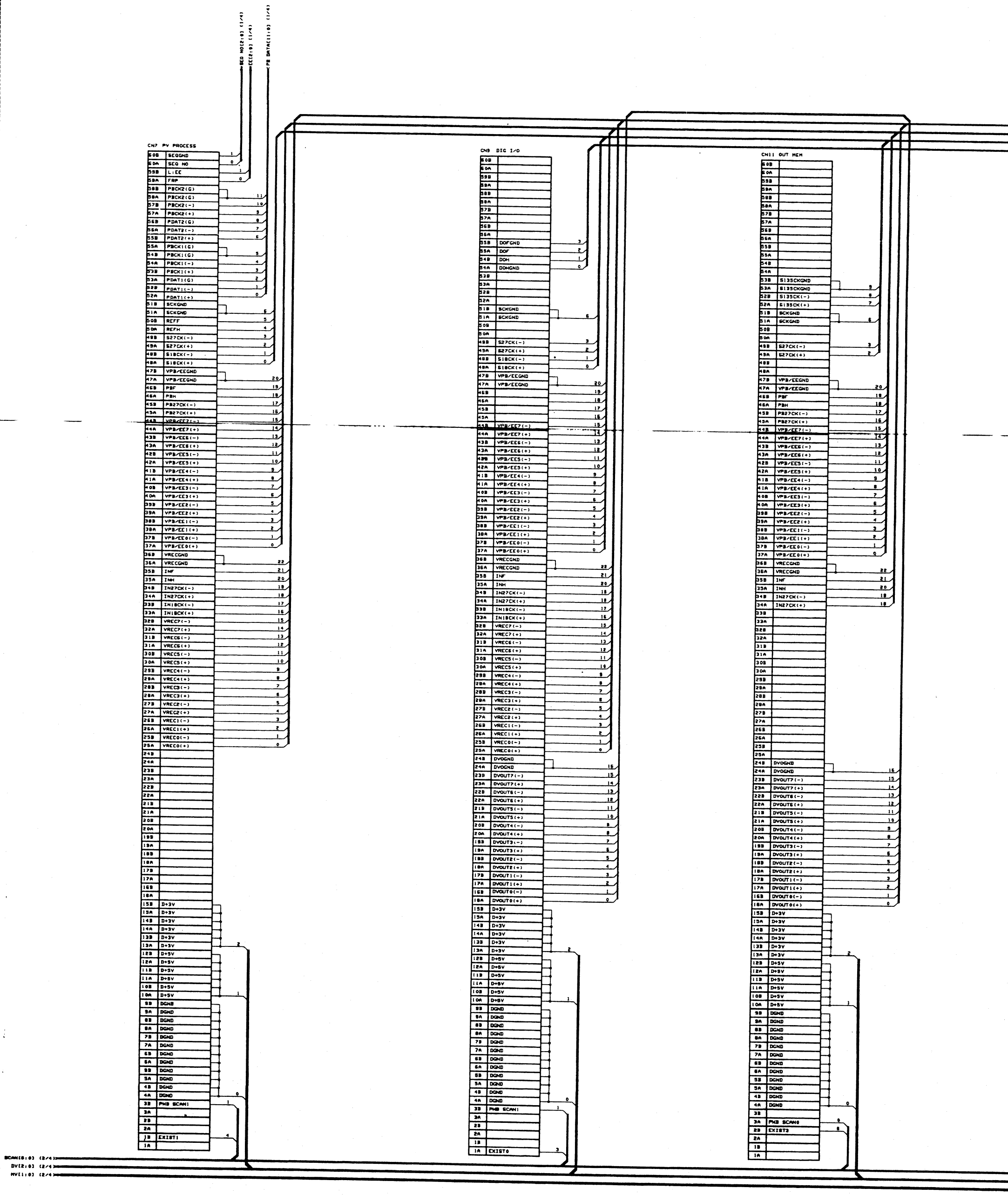
SEQ NO(2:0) (1/4)
ICE(2:0) (1/4)
PB DATA(11:0) (1/4)
CN7 PV PROCESS
SEQGND
SEQ NO
L:EE
FRP
PBCK2(G)
PBCK2(G)
PBCK2(-)
PBCK2(+)
PDAT2(G)
PDAT2(-)
PDAT2(+)
PBCK1(G)
PBCK1(G)
PBCK1(-)
PBCK1(+)
PDAT1(G)
PDAT1(-)
PDAT1(+)
SCKGND
SCKGND
REFF
REFH
S27CK(-)
S27CK(+)
S18CK(-)
S18CK(+)
VPB/EEGND
VPB/EEGND
PBF
PBH
PB27CK(-)
PB27CK(+)
VPB/EE7(-)
VPB/EE7(+)
VPB/EE6(-)
VPB/EE6(+)
VPB/EE5(-)
VPB/EE5(+)
VPB/EE4(-)
VPB/EE4(+)
VPB/EE3(-)
VPB/EE3(+)
VPB/EE2(-)
VPB/EE2(+)
VPB/EE1(-)
VPB/EE1(+)
VPB/EE0(-)
VPB/EE0(+)
VRECGND
VRECGND
INF
INH
IN27CK(-)
IN27CK(+)
IN18CK(-)
IN18CK(+)
VREC7(-)
VREC7(+)
VREC6(-)
VREC6(+)
VREC5(-)
VREC5(+)
VREC4(-)
VREC4(+)
VREC3(-)
VREC3(+)
VREC2(-)
VREC2(+)
VREC1(-)
VREC1(+)
VREC0(-)
VREC0(+)
D+3V
D+3V
D+3V
D+3V
D+3V
D+3V
D+5V
D+5V
D+5V
D+5V
DGND
DGND
DGND
DGND
DGND
DGND
DGND
DGND
DGND
DGND
PHB SCAN1
EXIST1
CN9 DIG I/O
DOFGND
DOF
DOH
DOHGND
SCKGND
SCKGND
S27CK(-)
S27CK(+)
S18CK(-)
S18CK(+)
VPB/EEGND
VPB/EEGND
VPB/EE7(-)
VPB/EE7(+)
VPB/EE6(-)
VPB/EE6(+)
VPB/EE5(-)
VPB/EE5(+)
VPB/EE4(-)
VPB/EE4(+)
VPB/EE3(-)
VPB/EE3(+)
VPB/EE2(-)
VPB/EE2(+)
VPB/EE1(-)
VPB/EE1(+)
VPB/EE0(-)
VPB/EE0(+)
VRECGND
VRECGND
INF
INH
IN27CK(-)
IN27CK(+)
IN18CK(-)
IN18CK(+)
VREC7(-)
VREC7(+)
VREC6(-)
VREC6(+)
VREC5(-)
VREC5(+)
VREC4(-)
VREC4(+)
VREC3(-)
VREC3(+)
VREC2(-)
VREC2(+)
VREC1(-)
VREC1(+)
VREC0(-)
VREC0(+)
DVOGND
DVOGND
DVOUT7(-)
DVOUT7(+)
DVOUT6(-)
DVOUT6(+)
DVOUT5(-)
DVOUT5(+)
DVOUT4(-)
DVOUT4(+)
DVOUT3(-)
DVOUT3(+)
DVOUT2(-)
DVOUT2(+)
DVOUT1(-)
DVOUT1(+)
DVOUT0(-)
DVOUT0(+)
D+3V
D+3V
D+3V
D+3V
D+3V
D+3V
D+5V
D+5V
D+5V
D+5V
DGND
DGND
DGND
DGND
DGND
DGND
DGND
DGND
DGND
DGND
PHB SCAN1
EXIST0
CN11 OUT MEM
5135CKGND
5135CKGND
5135CK(-)
5135CK(+)
SCKGND
SCKGND
S27CK(-)
S27CK(+)
VPB/EEGND
VPB/EEGND
PBF
PBH
PB27CK(-)
PB27CK(+)
VPB/EE7(-)
VPB/EE7(+)
VPB/EE6(-)
VPB/EE6(+)
VPB/EE5(-)
VPB/EE5(+)
VPB/EE4(-)
VPB/EE4(+)
VPB/EE3(-)
VPB/EE3(+)
VPB/EE2(-)
VPB/EE2(+)
VPB/EE1(-)
VPB/EE1(+)
VPB/EE0(-)
VPB/EE0(+)
VRECGND
VRECGND
INF
INH
IN27CK(-)
IN27CK(+)
DVOGND
DVOGND
DVOUT7(-)
DVOUT7(+)
DVOUT6(-)
DVOUT6(+)
DVOUT5(-)
DVOUT5(+)
DVOUT4(-)
DVOUT4(+)
DVOUT3(-)
DVOUT3(+)
DVOUT2(-)
DVOUT2(+)
DVOUT1(-)
DVOUT1(+)
DVOUT0(-)
DVOUT0(+)
D+3V
D+3V
D+3V
D+3V
D+3V
D+3V
D+5V
D+5V
D+5V
D+5V
DGND
DGND
DGND
DGND
DGND
DGND
DGND
DGND
DGND
DGND
PHB SCAN0
EXIST3
SCAN[8:0] (2/4)
DVI[2:0] (2/4)
MVI[1:0] (2/4)

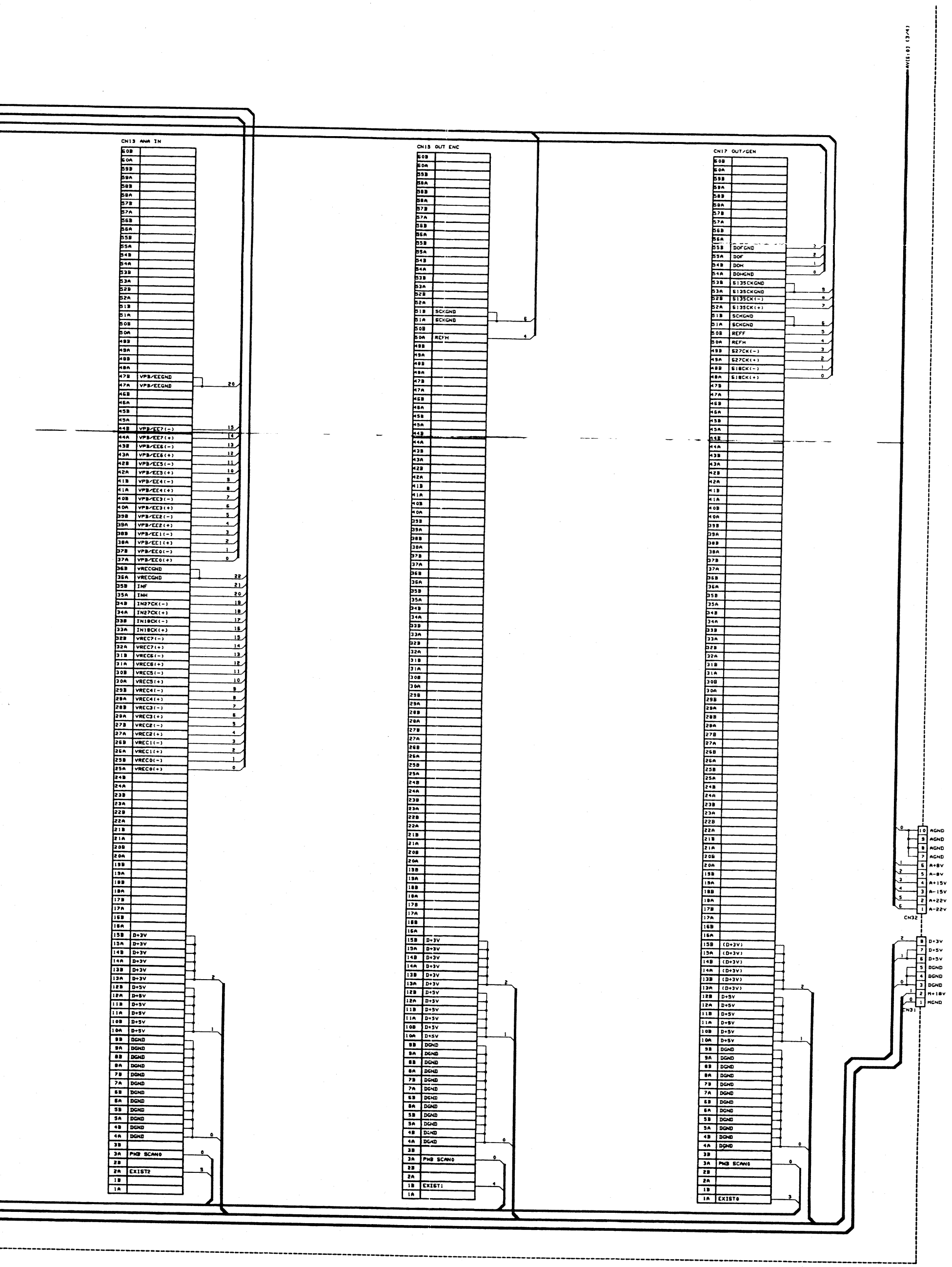
CN13 ANA IN
CN15 OUT ENC
CN17 OUT/GEN
CN32
CN31
AV(6:0) (3/4)
VPB/EEGND
VPB/EE7(-)
VPB/EE7(+)
VPB/EE6(-)
VPB/EE6(+)
VPB/EE5(-)
VPB/EE5(+)
VPB/EE4(-)
VPB/EE4(+)
VPB/EE3(-)
VPB/EE3(+)
VPB/EE2(-)
VPB/EE2(+)
VPB/EE1(-)
VPB/EE1(+)
VPB/EE0(-)
VPB/EE0(+)
VRECGND
INF
INH
IN27CK(-)
IN27CK(+)
IN18CK(-)
IN18CK(+)
VREC7(-)
VREC7(+)
VREC6(-)
VREC6(+)
VREC5(-)
VREC5(+)
VREC4(-)
VREC4(+)
VREC3(-)
VREC3(+)
VREC2(-)
VREC2(+)
VREC1(-)
VREC1(+)
VREC0(-)
VREC0(+)
D+3V
D+5V
DGND
PWB SCAN0
EXIST2
SCKGND
REFH
EXIST1
DOFGND
DOF
DOH
DOHGND
S135CKGND
S135CK(-)
S135CK(+)
REFF
S27CK(-)
S27CK(+)
S18CK(-)
S18CK(+)
(D+3V)
EXIST0
AGND
A+8V
A-8V
A+15V
A-15V
A+22V
A-22V
M+18V
MGND

4.17 MOTHER-1 CIRCUIT BOARD

— SIDE B —

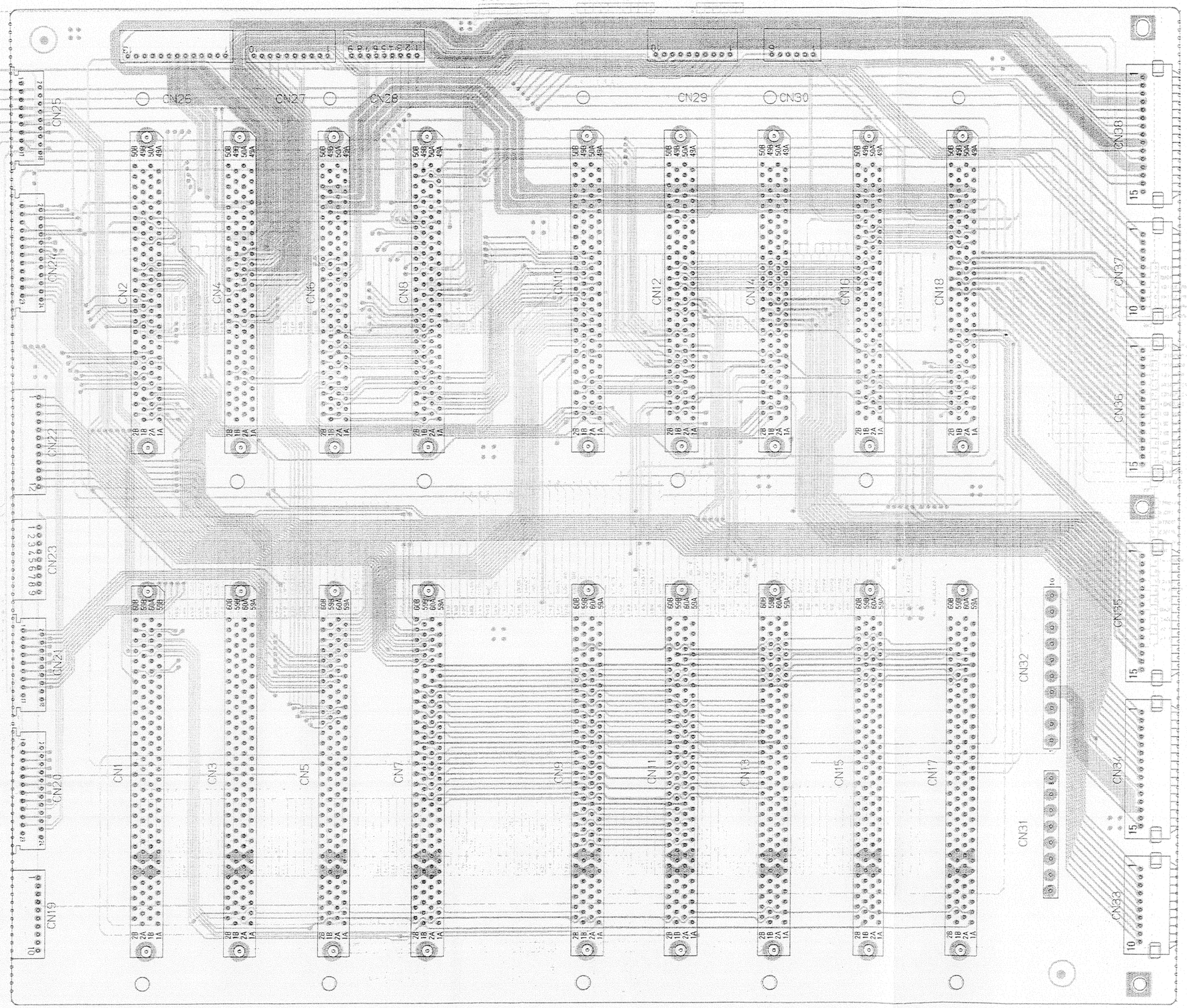

4-33

— INNER PATTER —

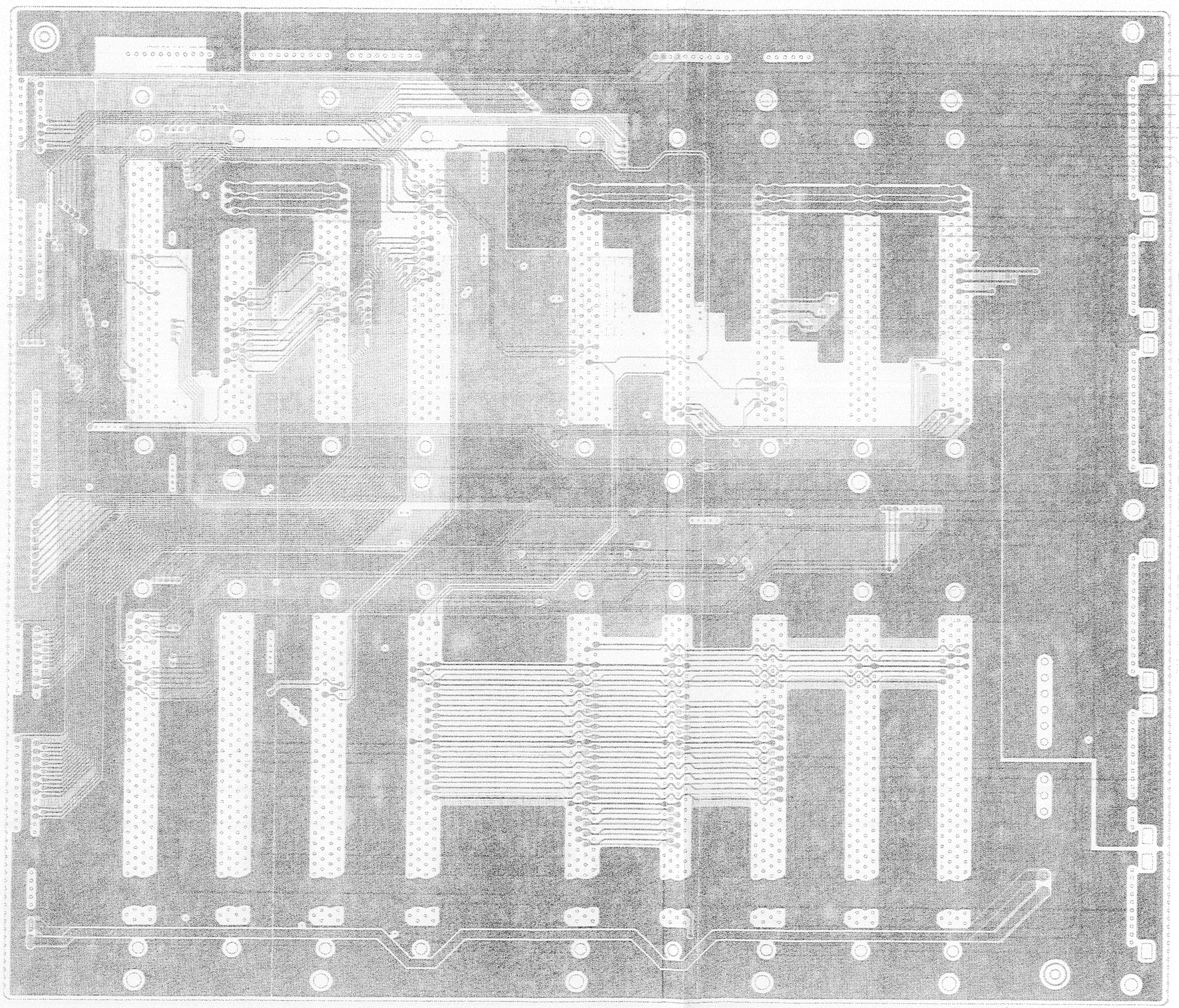

4-33

4.19 MOTHER-2 CIRCUIT BOARD

— SIDE B —

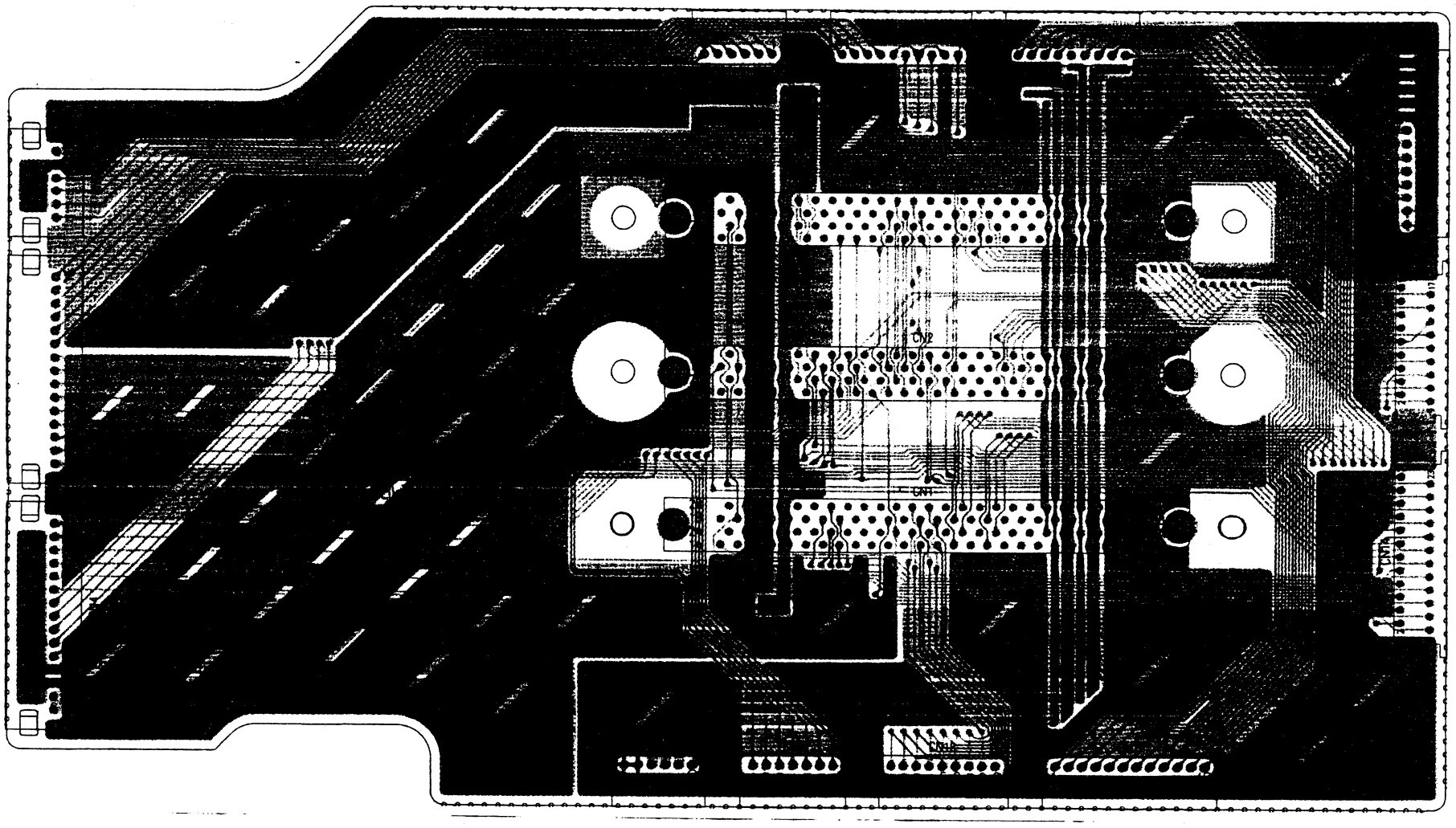

4.20 PV PRE SCHEMATIC DIAGRAM

4.21 PV

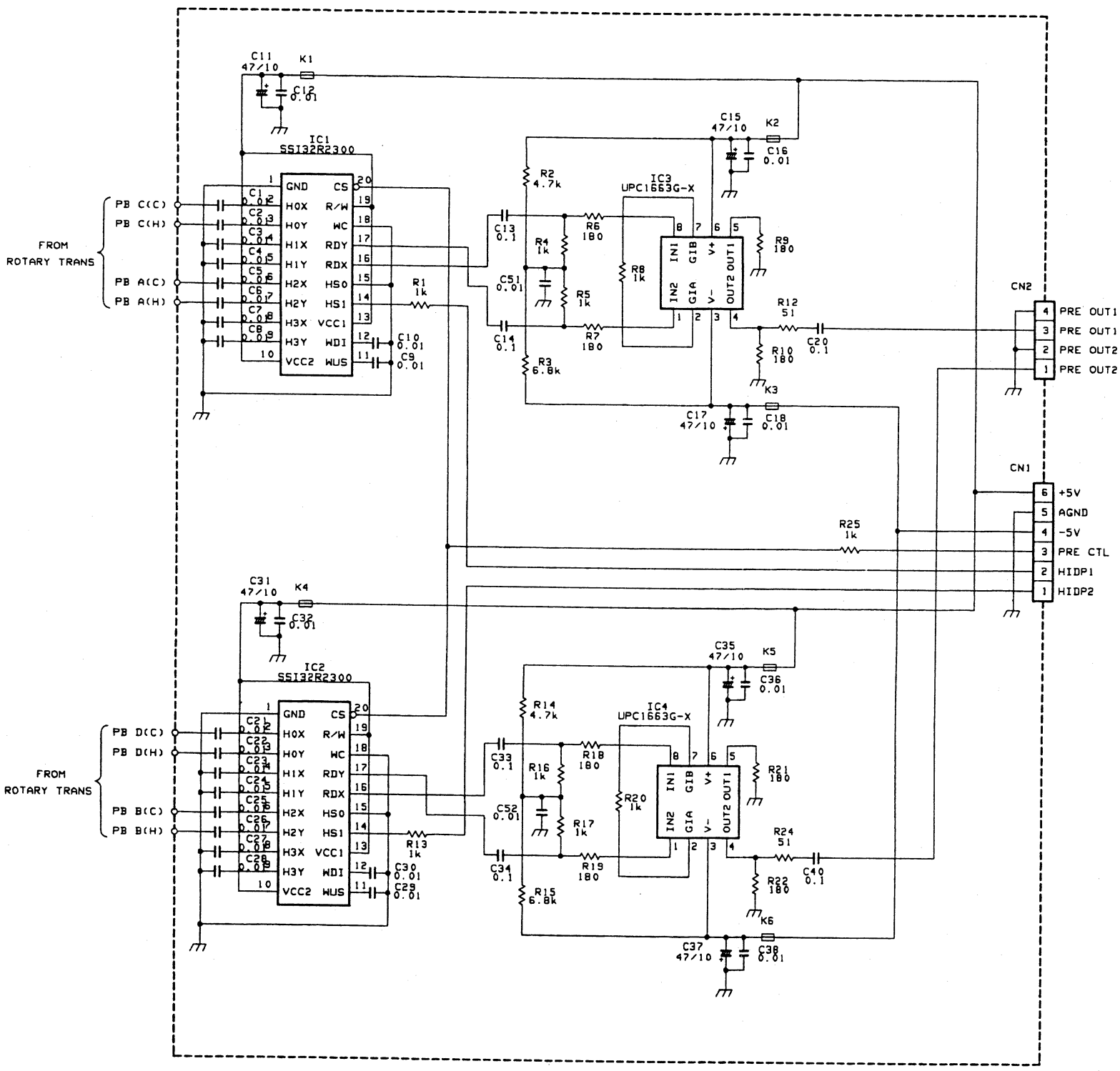

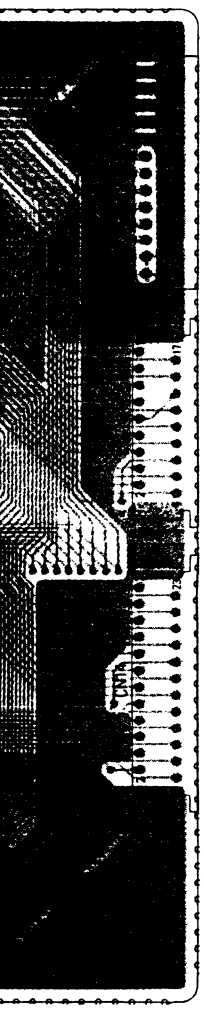

UT1(G)
UT1(X)
UT2(G)
UT2(X)

TL

4.21 PV PRE CIRCUIT BOARDS

— SIDE A —

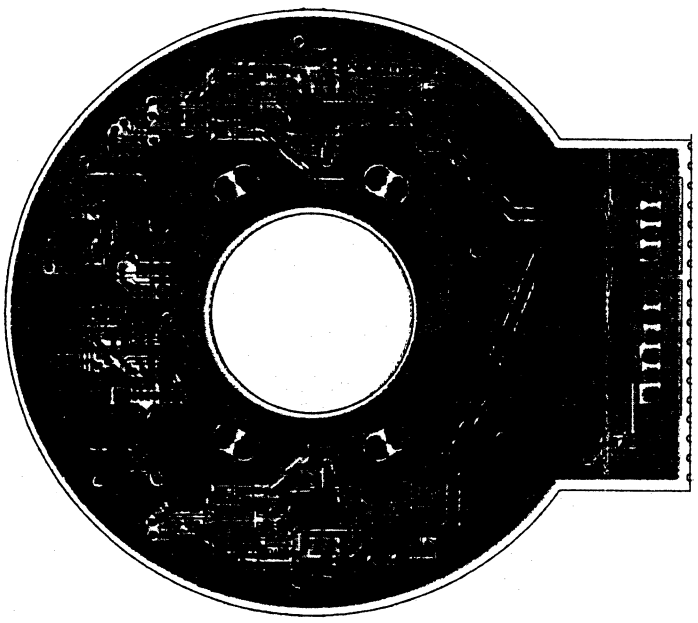

— SIDE B —

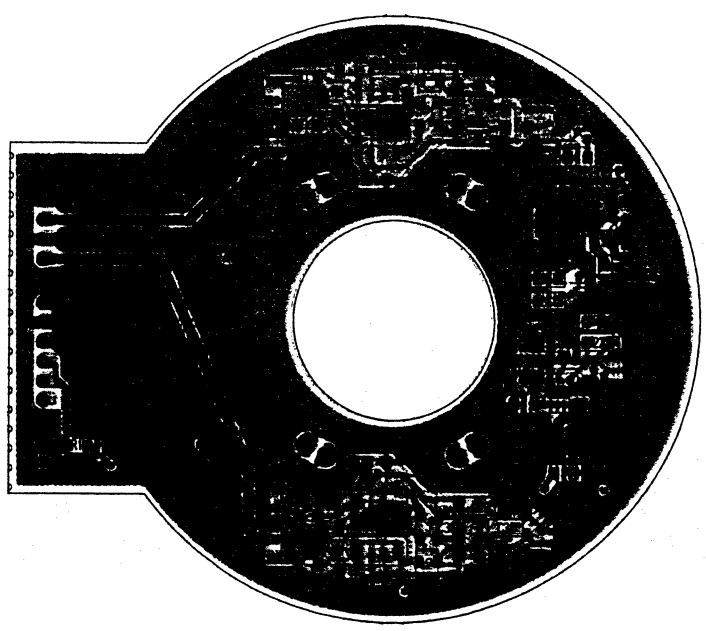

4.22 REC/ITI SCHEMATIC DIAGRAM (D85/D80)

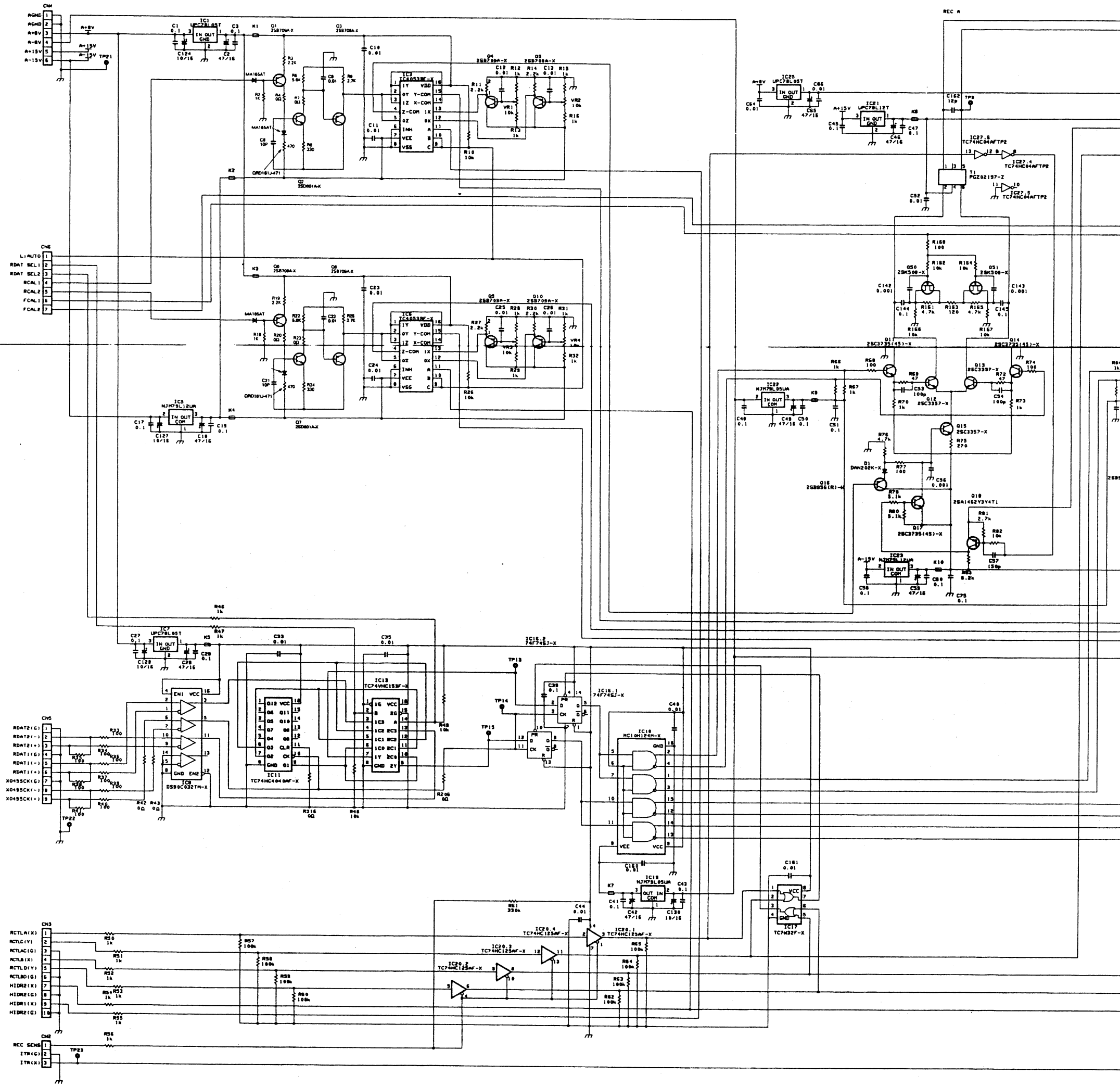

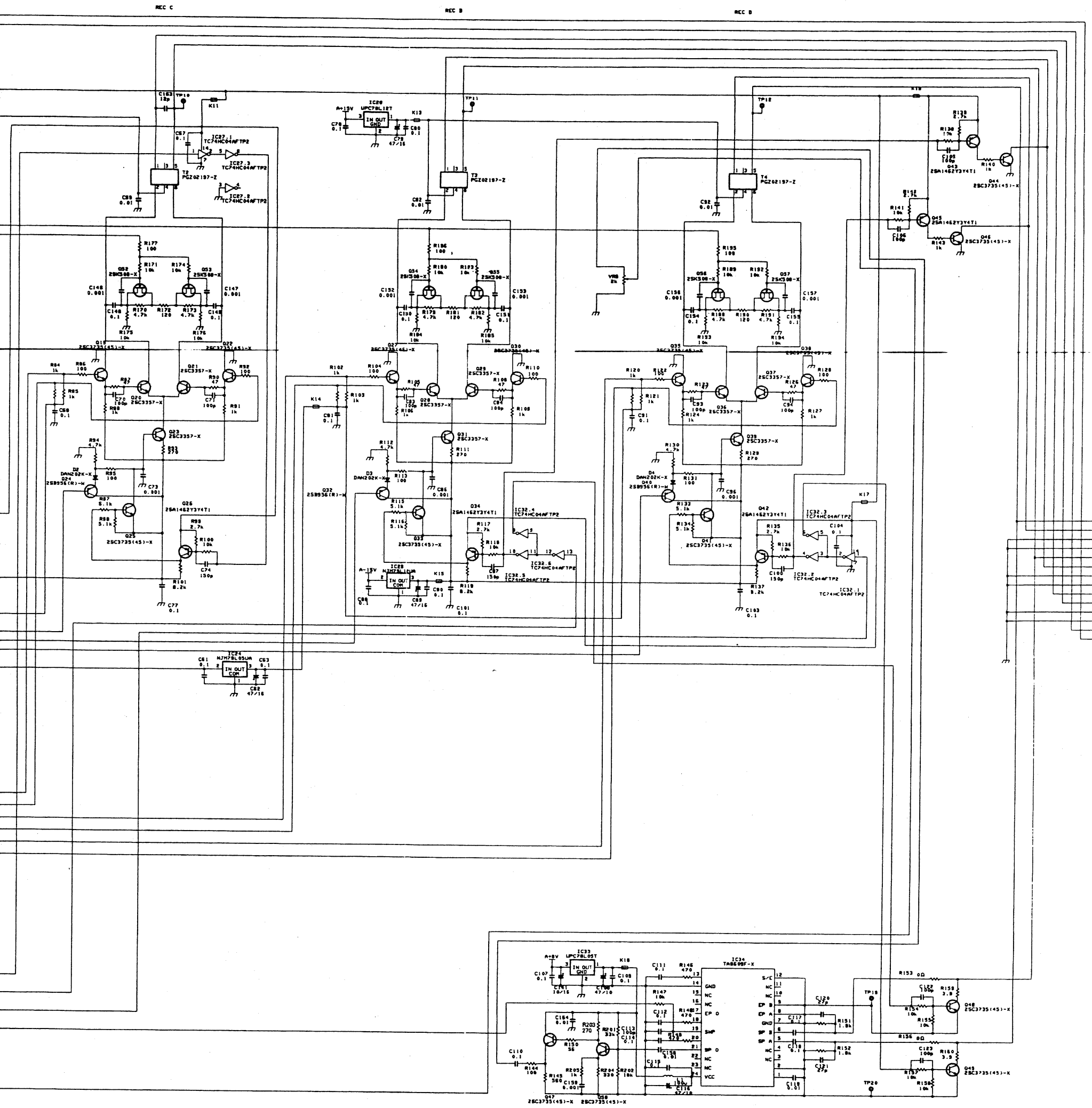
REC C
REC B
REC B
IC28 UPC78L12T
IC29 UPC78L12T
IC26 NJM78L05UA
IC27.1 TC74HC04AFTP2
IC27.2 TC74HC04AFTP2
IC27.3 TC74HC04AFTP2
IC32.1 TC74HC04AFTP2
IC32.2 TC74HC04AFTP2
IC32.3 TC74HC04AFTP2
IC32.4 TC74HC04AFTP2
IC32.5 TC74HC04AFTP2
IC32.6 TC74HC04AFTP2
IC33 UPC78L05T
IC34 TA8609F-X
T2 PGZ02197-Z
T3 PGZ02197-Z
T4 PGZ02197-Z
TP10
TP11
TP12
TP19
TP20
CN1
10P R1.1
Q15 2SC3735(45)-X
Q16 2SC3735(45)-X
Q17 2SC3735(45)-X
Q18 2SC3735(45)-X
Q19 2SC3735(45)-X
Q20 2SC3357-X
Q21 2SC3357-X
Q23 2SC3357-X
Q24 2SB956(R)-M
Q25 2SC3735(45)-X
Q26 2SA1462Y3Y4T1
Q27 2SC3735(45)-X
Q28 2SC3357-X
Q29 2SC3357-X
Q30 2SC3735(45)-X
Q31 2SC3357-X
Q32 2SB956(R)-M
Q33 2SC3735(45)-X
Q34 2SA1462Y3Y4T1
Q35 2SC3735(45)-X
Q36 2SC3357-X
Q37 2SC3357-X
Q38 2SC3357-X
Q40 2SB956(R)-M
Q41 2SC3735(45)-X
Q42 2SA1462Y3Y4T1
Q43 2SA1462Y3Y4T1
Q44 2SC3735(45)-X
Q45 2SA1462Y3Y4T1
Q46 2SC3735(45)-X
Q47 2SC3735(45)-X
Q48 2SC3735(45)-X
D2 DAN202K-X
D3 DAN202K-X
D4 DAN202K-X
K11
K12
K13
K14
K15
K16
K17
K18
K19
VR8 2k

4.18 MOTHER-2 SCHEMATIC DIAGRAM

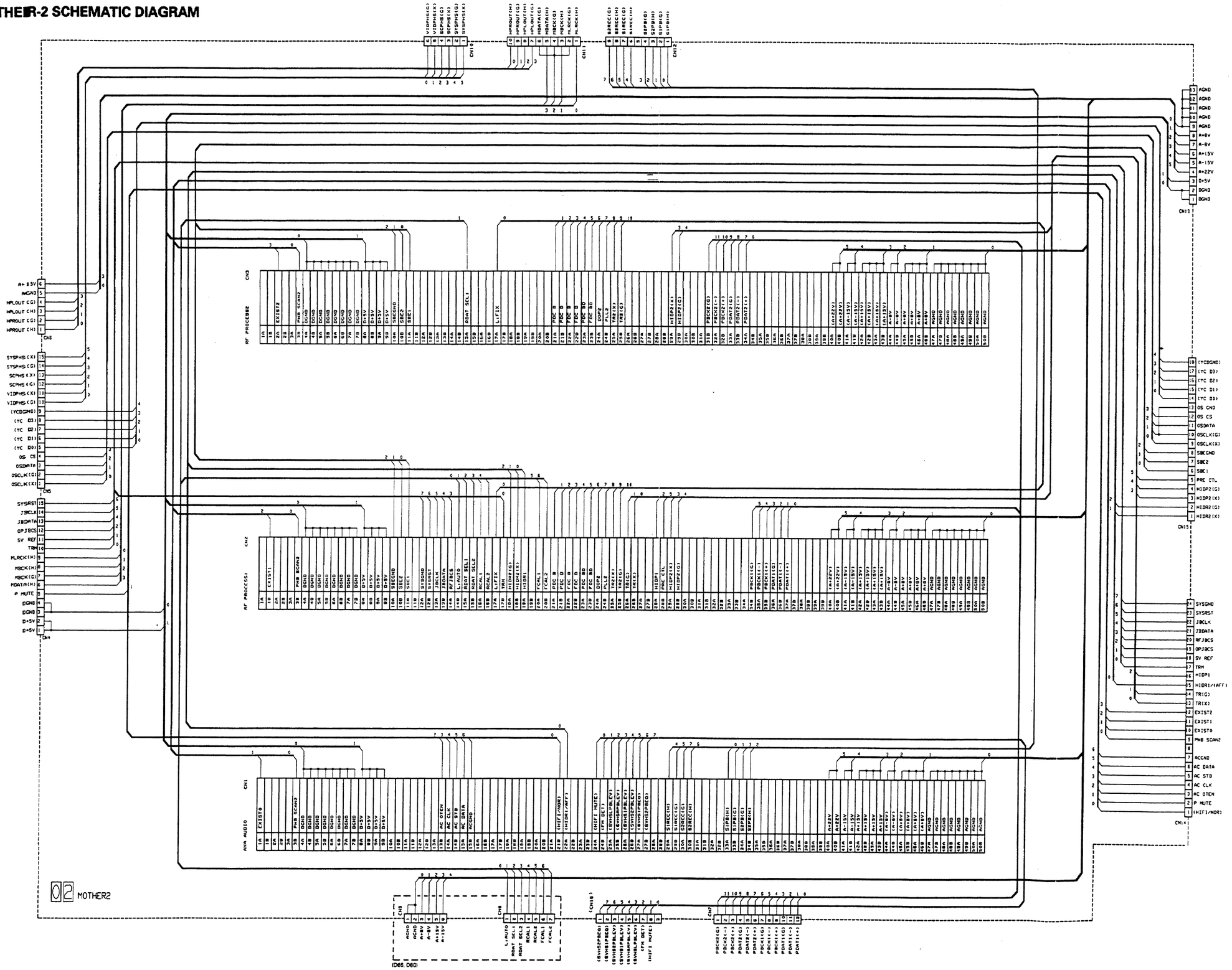

4-34

4.23 REC/ITI CIRCUIT BOARDS

— SIDE A —

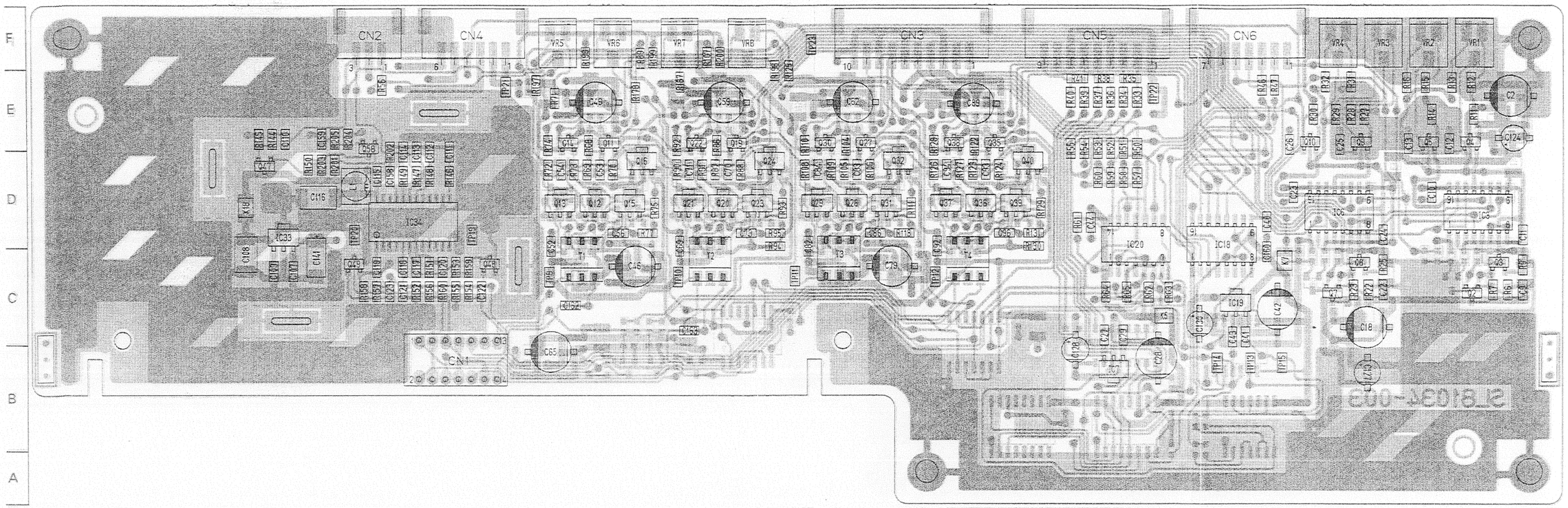

ADDRESS TABLE OF BOARD PARTS

Side — A-1C — Y axis / X axis

Each address may have an address error by one interval.

IC1	B- 16E	Q5	A- 15E	Q35	A- 11E	R1	B- 15C	R31	A- 14F	R63	A- 12C	R94	A- 8D	R126	A- 10D	R157	A- 4C	R187	A- 7F	VR7	A- 7F	C40	A- 13D	C70	A- 8D	C105	B- 7C	C148	B- 8D	TP23	A- 9F
IC3	A- 15D	Q6	B- 14C	Q36	A- 10D	R2	B- 15C	R32	A- 14F	R64	A- 12C	R95	A- 8D	R127	A- 10D	R158	A- 4C	R188	B- 10D	VR8	A- 8F	C41	A- 13B	C71	A- 7D	C106	B- 7C	C149	B- 7D		
IC5	B- 14C	Q7	A- 14C	Q37	A- 10D	R3	B- 15C	R33	A- 12E	R65	A- 12C	R97	B- 8D	R128	A- 10E	R159	A- 5C	R189	B- 10D			C42	A- 14C	C72	B- 8D	C107	A- 3C	C150	B- 9D	T1	A- 6C
IC6	A- 14D	Q8	A- 14C	Q38	A- 10E	R4	B- 16C	R34	A- 12E	R66	B- 6E	R98	B- 8E	R129	A- 11D	R160	A- 5C	R190	B- 10D	C1	B- 16E	C43	A- 13B	C73	A- 8D	C108	A- 3C	C151	B- 9D	T2	A- 8C
IC7	A- 12B	Q9	A- 14E	Q39	A- 11D	R5	B- 16C	R35	A- 12F	R67	B- 6E	R99	B- 8E	R130	A- 11D	R161	B- 6D	R191	B- 10D	C2	A- 16E	C44	A- 12D	C74	B- 8E	C109	A- 3C	C152	B- 9D	T3	A- 9C
IC8	B- 12B	Q10	A- 14E	Q40	A- 11E	R6	A- 16C	R36	A- 12E	R68	A- 6E	R100	B- 8E	R131	A- 11D	R162	B- 6D	R192	B- 10D	C3	B- 16E	C45	B- 7C	C75	B- 7D	C110	A- 3E	C153	B- 9D	T4	A- 10C
IC11	B- 11A	Q11	A- 6E	Q41	B- 11D	R7	A- 16C	R37	A- 12E	R69	A- 6D	R101	B- 8E	R133	B- 11D	R163	B- 6D	R193	B- 10D	C7	B- 15C	C46	A- 7C	C77	B- 8D	C111	A- 5E	C154	B- 10D		
IC13	B- 12A	Q12	A- 6D	Q42	B- 10E	R8	B- 16C	R38	A- 12F	R70	A- 6D	R102	B- 9E	R134	B- 11E	R164	B- 6D	R194	B- 10D	C8	B- 16C	C47	B- 6C	C78	B- 10C	C112	A- 5E	C155	B- 10D	K1	B- 16E
IC15	B- 13A	Q13	A- 6D	Q43	B- 7B	R9	A- 16C	R39	A- 11E	R71	A- 6E	R103	B- 9E	R135	B- 10E	R165	B- 6D	R195	B- 10D	C9	A- 16C	C48	B- 6E	C79	A- 9C	C113	A- 4E	C156	B- 11D	K2	B- 16C
IC16	B- 13B	Q14	A- 6E	Q44	B- 6B	R10	B- 16D	R40	A- 11E	R72	A- 6D	R104	A- 9E	R136	B- 10E	R166	B- 6D	R196	A- 8F	C10	A- 15D	C49	A- 6E	C80	B- 9C	C114	A- 4E	C157	B- 10D	K3	B- 15E
IC17	B- 12C	Q15	A- 7D	Q45	B- 7B	R11	A- 16E	R41	A- 11F	R73	A- 6D	R105	A- 9D	R137	B- 11E	R167	B- 6D	R197	A- 6E	C11	A- 16D	C50	B- 6E	C81	B- 9E	C115	A- 4D	C158	A- 4D	K4	B- 15C
IC18	A- 13D	Q16	A- 7E	Q46	B- 7B	R12	A- 16E	R42	B- 11C	R74	A- 6E	R106	A- 9D	R138	B- 7C	R168	B- 6D	R198	A- 6F	C12	A- 15E	C51	B- 6E	C82	A- 9D	C116	A- 3D	C159	A- 3E	K5	A- 12C
IC19	A- 13C	Q17	B- 7D	Q47	A- 3E	R13	A- 15E	R43	B- 11C	R75	A- 7D	R107	A- 8F	R139	B- 7B	R169	B- 6E	R199	A- 7F	C13	A- 15E	C52	A- 6D	C83	A- 9D	C117	A- 4C	C160	A- 13C	K7	A- 14C
IC20	A- 12D	Q18	B- 6E	Q48	A- 5C	R14	A- 15E	R46	A- 13E	R76	B- 7D	R108	A- 9D	R140	B- 6B	R170	B- 8D	R200	A- 8F	C17	B- 14C	C53	A- 6D	C84	A- 9D	C118	A- 4C	C161	B- 12C	K8	B- 6C
IC21	B- 7C	Q19	A- 8E	Q49	A- 4C	R15	A- 15E	R47	A- 13E	R77	A- 7D	R109	A- 9D	R141	B- 7C	R171	B- 7D	R201	A- 4E	C18	A- 14C	C54	A- 6D	C85	B- 9D	C119	A- 4C	C162	A- 6C	K9	B- 6E
IC22	B- 6E	Q20	A- 8D	Q50	B- 6D	R16	A- 15E	R48	B- 12A	R79	B- 7D	R110	A- 9E	R142	B- 7B	R172	B- 7D	R202	A- 4E	C19	B- 15C	C55	B- 7D	C86	A- 9D	C120	A- 5C	C163	A- 7C	K10	B- 7E
IC23	B- 8E	Q21	A- 7D	Q51	B- 6D	R17	B- 14C	R49	B- 12B	R80	B- 7E	R111	A- 10D	R143	B- 7B	R173	B- 7D	R203	A- 3E	C20	B- 14C	C56	A- 7D	C87	B- 9E	C121	A- 4C			K11	B- 7C
IC24	B- 9E	Q22	A- 7E	Q52	B- 8D	R18	B- 14C	R50	A- 12E	R81	B- 6E	R112	B- 10D	R144	A- 3E	R174	B- 7D	R204	A- 4E	C21	B- 14C	C57	B- 6E	C88	B- 11E	C122	A- 5C	L1	A- 4D	K13	B- 9C
IC25	B- 6B	Q23	A- 8D	Q53	B- 7D	R19	B- 14C	R51	A- 12E	R82	B- 6E	R113	A- 10D	R145	A- 3E	R175	B- 8D	R205	A- 4E	C22	A- 15C	C58	B- 8E	C89	A- 10E	C123	A- 4C			K14	B- 8E
IC27	B- 8B	Q24	A- 8E	Q54	B- 9D	R20	B- 14C	R52	A- 12E	R83	B- 7E	R115	B- 9D	R146	A- 5D	R176	B- 7D	R206	B- 13A	C23	A- 14D	C59	A- 8E	C90	B- 10E	C124	A- 16E	TP9	A- 6C	K15	B- 10E
IC28	B- 9C	Q25	B- 8D	Q55	B- 9D	R21	B- 14C	R53	A- 12E	R84	B- 7E	R116	B- 9E	R147	A- 4D	R177	B- 7D	R207	B- 13A	C24	A- 15D	C60	B- 7E	C91	B- 10E	C127	A- 14B	TP10	A- 7C	K17	B- 11C
IC29	B- 10E	Q26	B- 8E	Q56	B- 10D	R22	A- 14C	R54	A- 11E	R85	B- 7E	R117	B- 9E	R148	A- 5D	R178	A- 7E	R208	B- 13A	C25	A- 14E	C61	B- 9E	C92	A- 10D	C128	A- 11B	TP11	A- 8C	K18	A- 3D
IC32	B- 11B	Q27	A- 9E	Q57	B- 10D	R23	A- 14C	R55	A- 11E	R86	A- 8E	R118	B- 9E	R149	A- 4D	R179	B- 9D	R209	B- 13A	C26	A- 14E	C62	A- 9E	C93	A- 10D	C130	A- 13C	TP12	A- 10C	K19	B- 6B
IC33	A- 3D	Q28	A- 9D	Q58	A- 4E	R24	B- 14C	R56	A- 4E	R87	A- 8D	R119	B- 9E	R150	A- 3E	R180	B- 9D			C27	A- 12C	C63	B- 9E	C94	A- 10D	C141	A- 3C	TP13	A- 13B		
IC34	A- 4D	Q29	A- 9D			R25	A- 15C	R57	A- 12D	R88	A- 8D	R120	B- 10E	R151	A- 5C	R181	B- 9D	VR1	A- 16F	C28	A- 12B	C64	B- 5B	C95	B- 11D	C142	B- 7D	TP14	A- 13B	CN1	A- 4B
		Q30	A- 9E	D1	B- 7D	R26	B- 14D	R58	A- 12D	R89	A- 7F	R121	B- 10E	R152	A- 4C	R182	B- 9D	VR2	A- 15F	C29	A- 12C	C65	A- 6B	C96	A- 11D	C143	B- 6D	TP15	A- 14B	CN2	A- 4F
Q1	B- 15C	Q31	A- 9D	D2	B- 8D	R27	A- 14E	R59	A- 12D	R90	A- 7D	R122	A- 10E	R153	A- 5C	R183	B- 8D	VR3	A- 15F	C33	B- 11B	C66	B- 6B	C100	B- 10E	C144	B- 6D	TP19	A- 5D	CN3	A- 10F
Q2	A- 16C	Q32	A- 10E	D3	B- 9D	R28	A- 14E	R60	A- 12D	R91	A- 7D	R123	A- 10D	R154	A- 5C	R184	B- 9D	VR4	A- 14F	C35	B- 12B	C67	B- 8C	C101	B- 10D	C145	B- 6D	TP20	A- 4D	CN4	A- 5F
Q3	A- 16C	Q33	B- 9D	D4	B- 11D	R29	A- 14E	R61	A- 11D	R92	A- 7E	R124	A- 11D	R155	A- 5C	R185	B- 9D	VR5	A- 6F	C37	B- 14B	C68	B- 7E	C103	B- 11D	C146	B- 8D	TP21	A- 5E	CN5	A- 12F
Q4	A- 15E	Q34	B- 9E			R30	A- 14E	R62	A- 12C	R93	A- 8D	R125	A- 8F	R156	A- 5C	R186	B- 9D	VR6	A- 6F	C38	B- 14C	C69	A- 7D	C104	B- 11C	C147	B- 7D	TP22	A- 12E	CN6	A- 13F

4-37

— SIDE B —

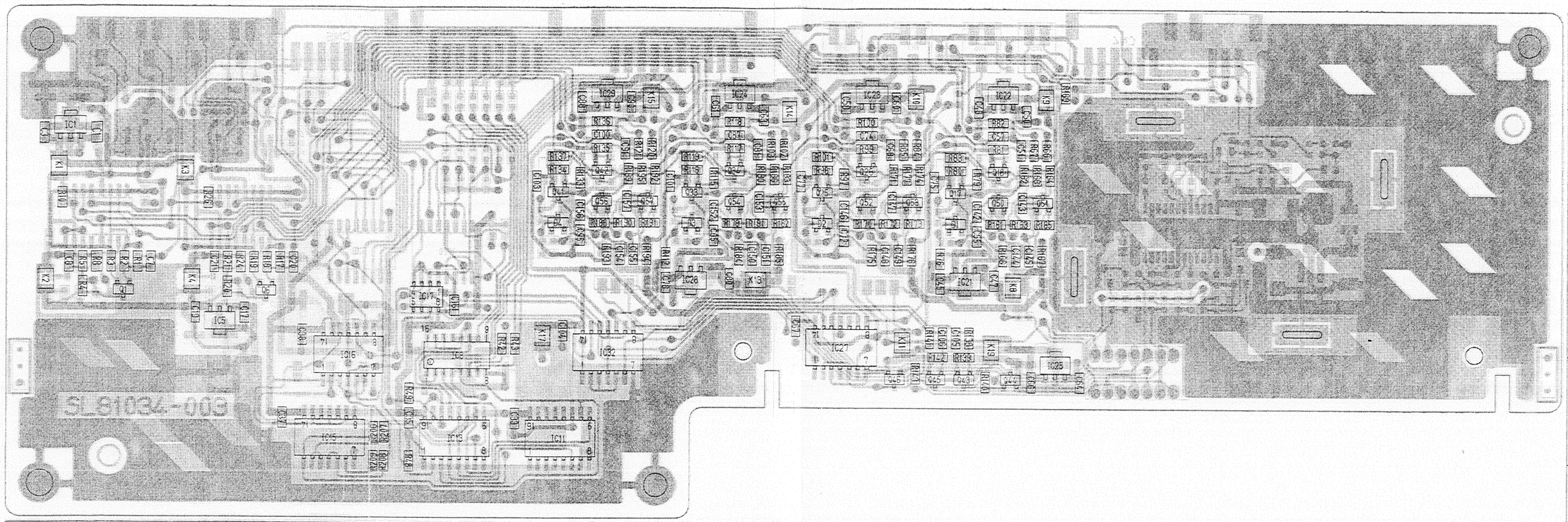

4-38

4.24 PV PROCESS SCHEMATIC DIAGRAMS

— DIAGRAM 1/9 —

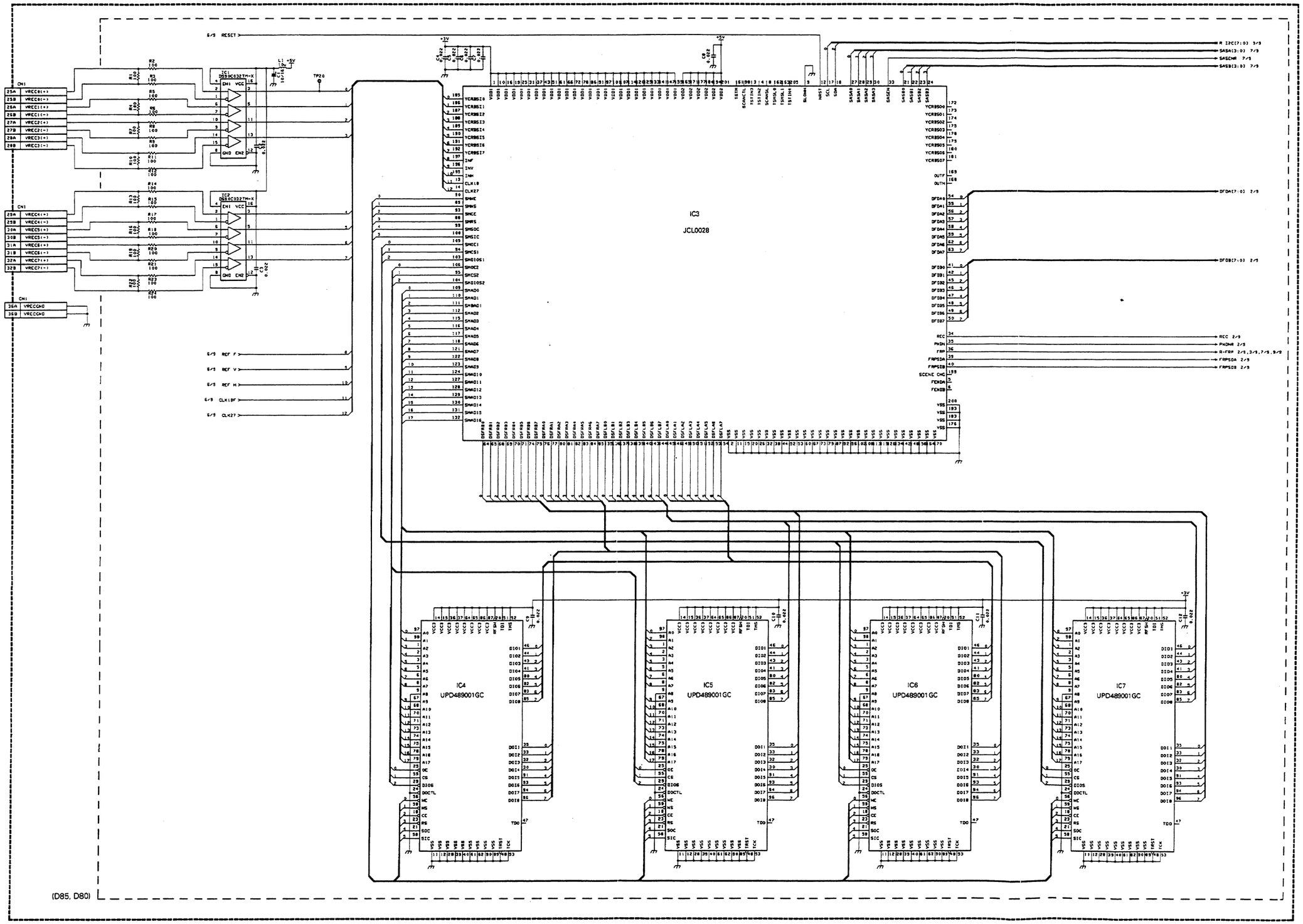

4-39

— DIAGRAM 2/9 —

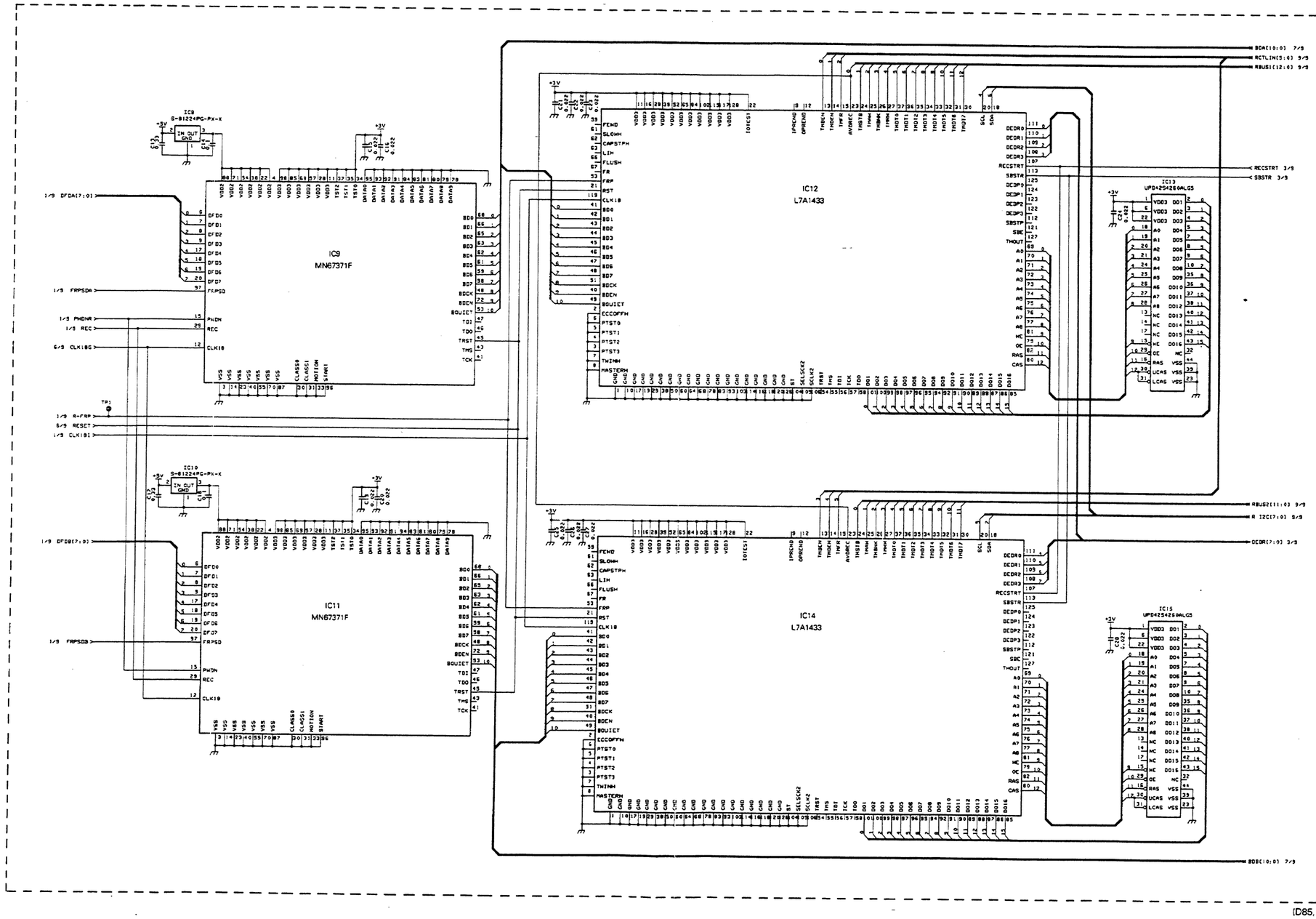

(D85, D80)

4-40

— DIAGRAM 3/9 —

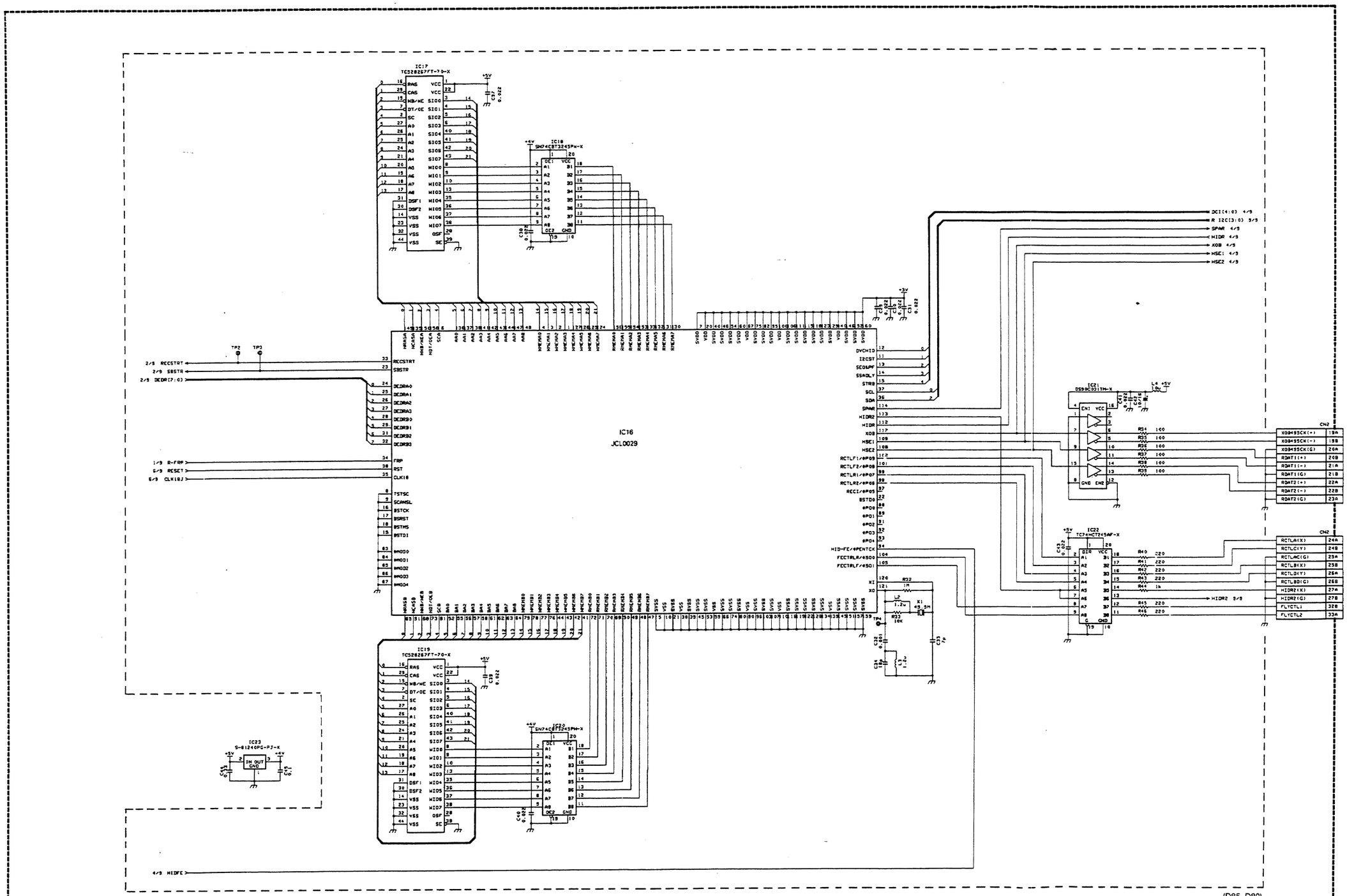

4-41

— DIAGRAM 4/9 —

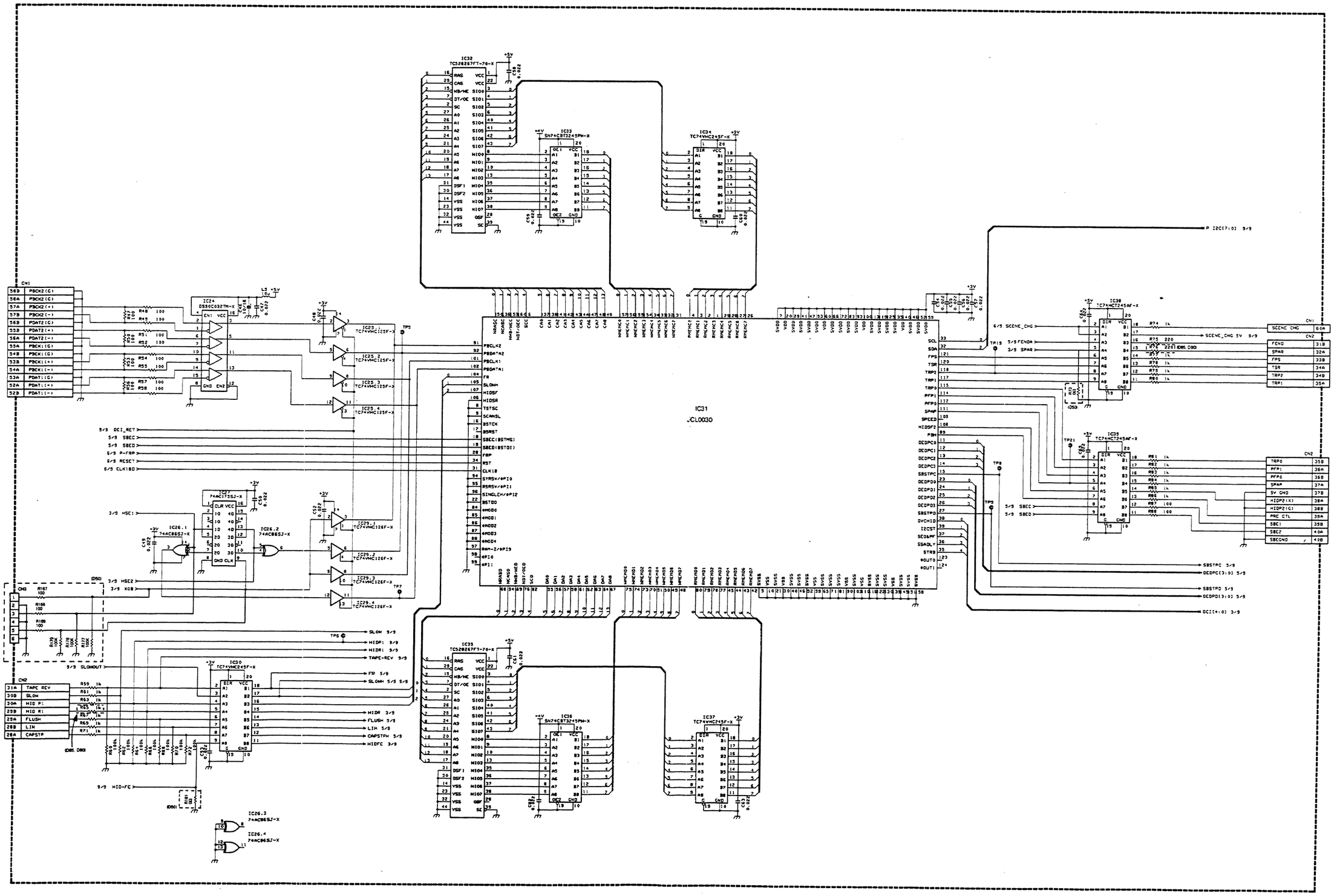

4-42

— DIAGRAM 5/9 —

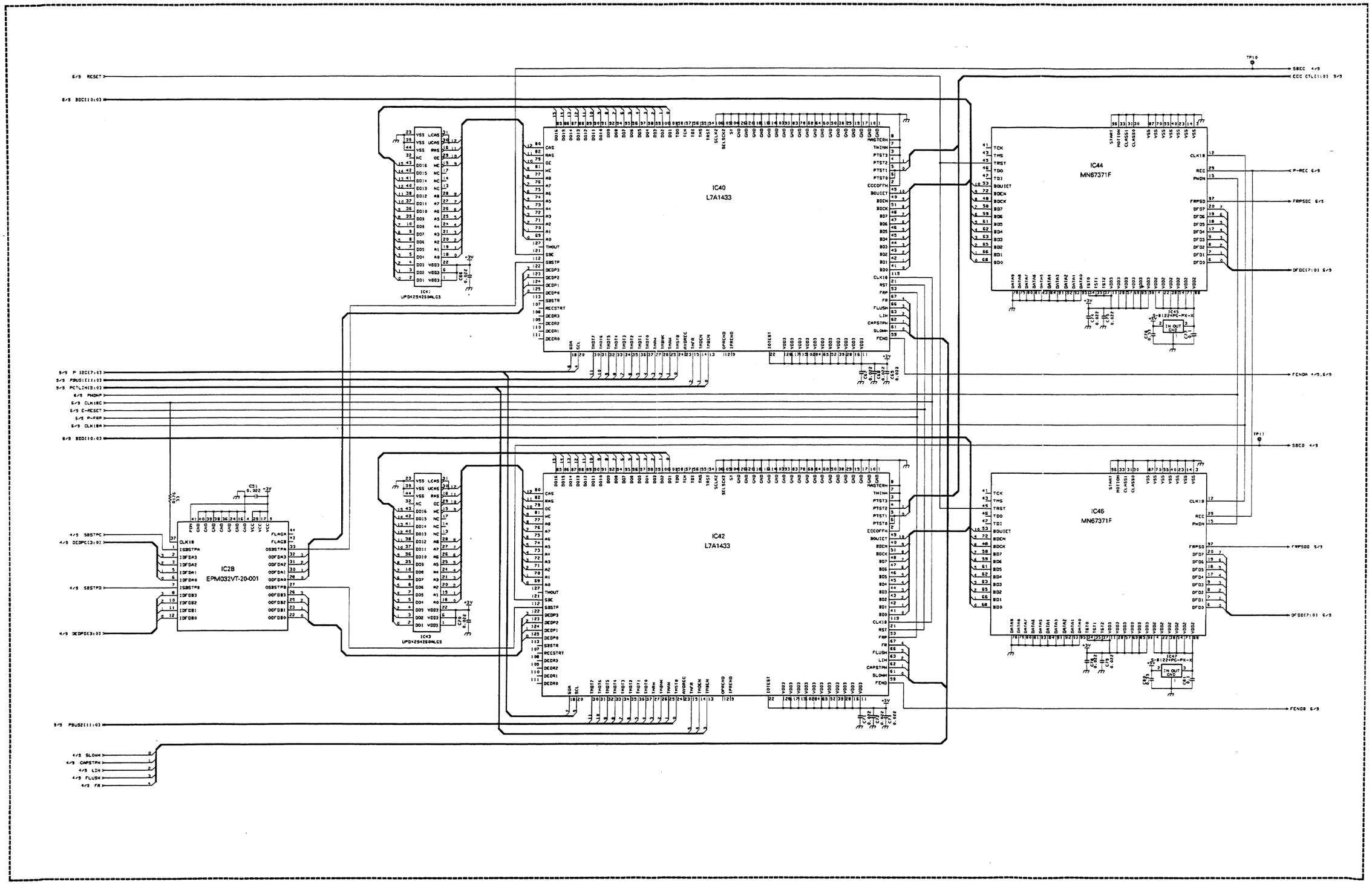

4-43

— DIAGRAM 6/9 —

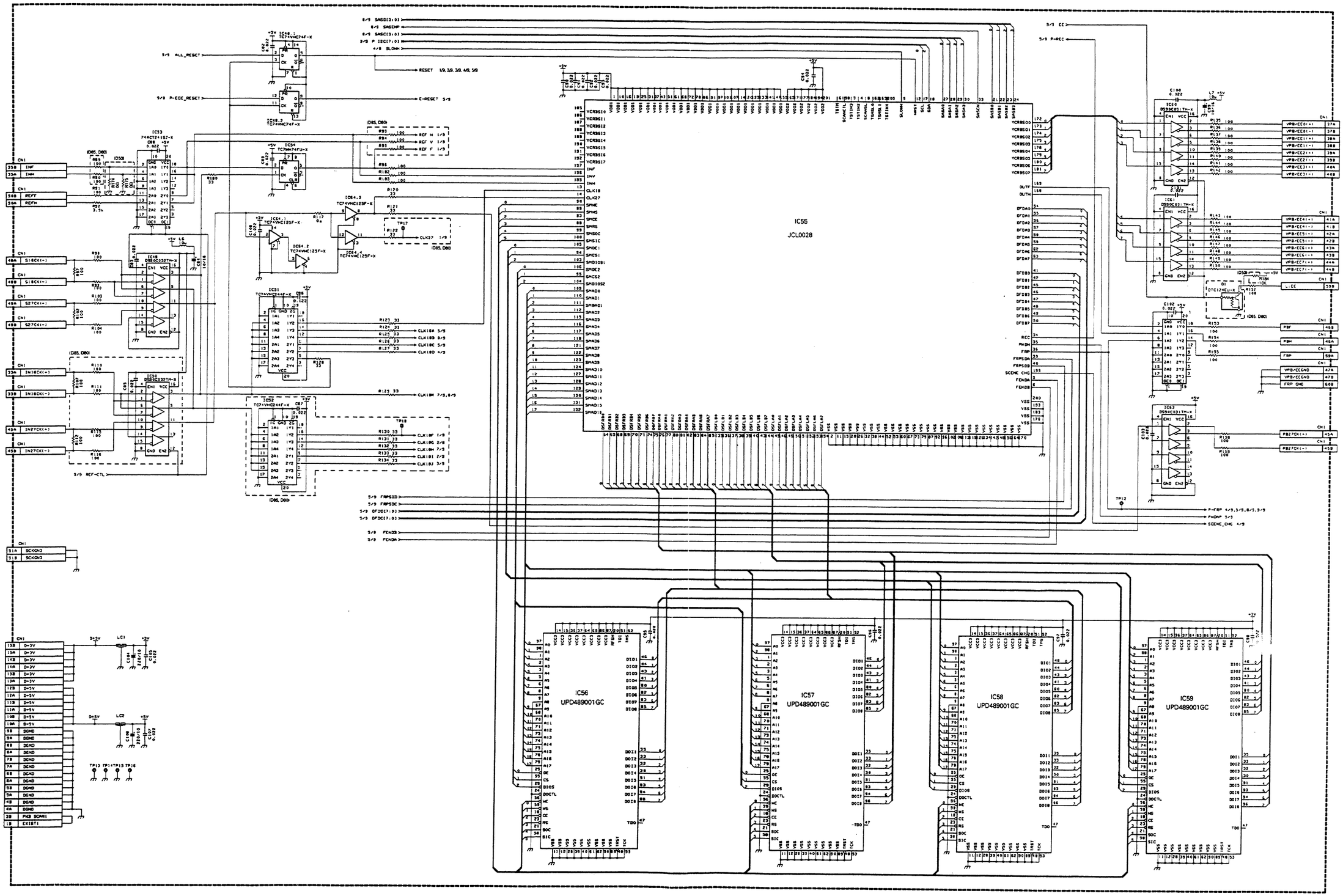

4-44

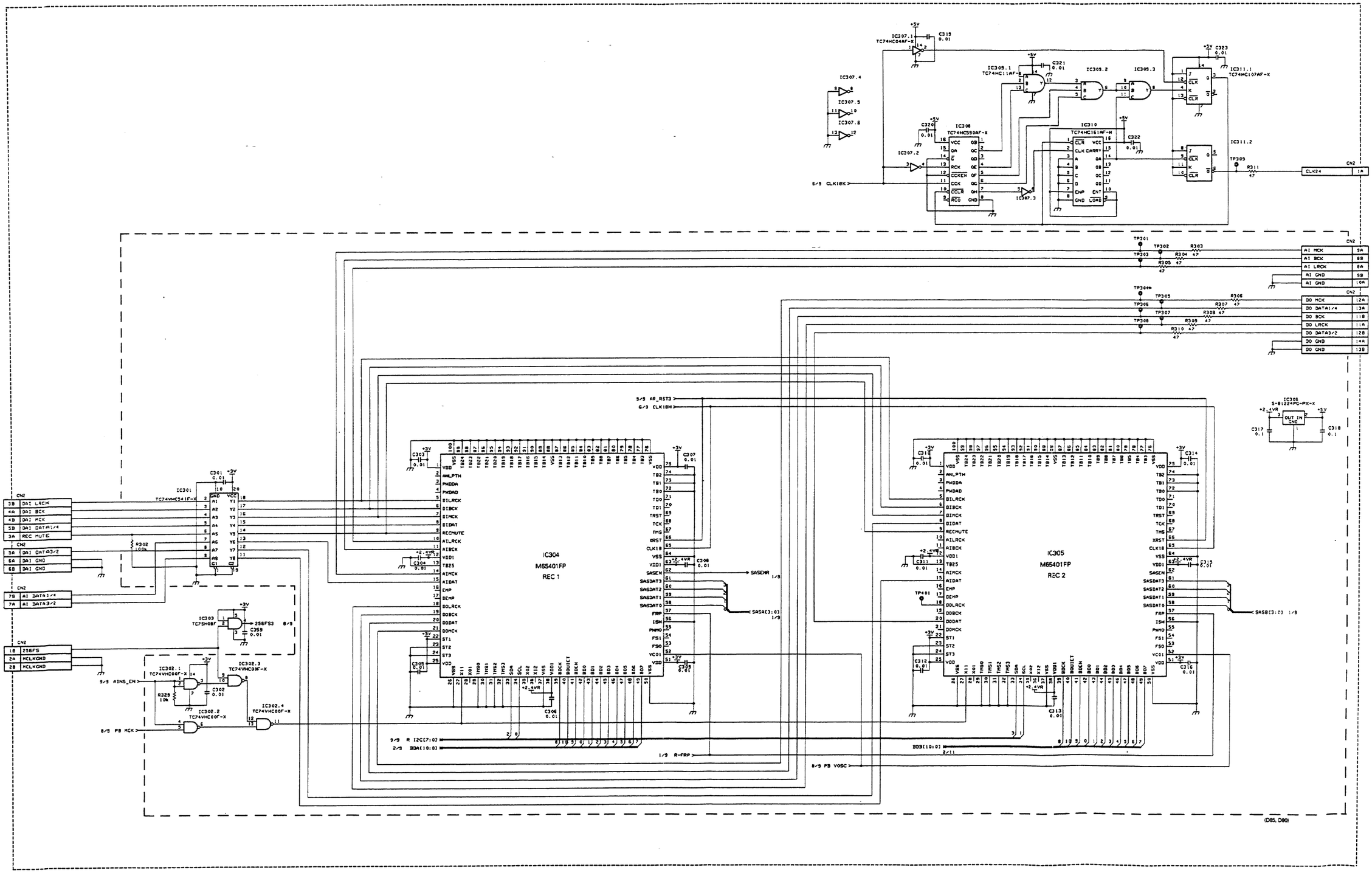
IC307.1 TC74HC04AF-X
C315 0.01
IC307.4
IC307.5
IC307.6
IC307.2
IC307.3
6/9 CLK18K
IC309.1 TC74HC11AF-X
C321 0.01
IC309.2
IC309.3
C323 0.01
IC311.1 TC74HC107AF-X
IC311.2
C320 0.01
IC308 TC74HC590AF-X
IC310 TC74HC161AF-M
C322 0.01
TP309
R311 47
CN2 1A CLK24
CN2
TP301 TP302 R303 TP303 R304 47 R305 47
AI MCK 5A
AI BCK 8B
AI LRCK 8A
AI GND 9B
AI GND 10A
TP304 TP305 R306 TP306 R307 47 TP307 R308 47 TP308 R309 47 R310 47
DO MCK 12A
DO DATA1/4 13A
DO BCK 11B
DO LRCK 11A
DO DATA3/2 12B
DO GND 14A
DO GND 13B
IC305 S-81224PC-PX-X
+2.4VR
OUT IN GND
C317 0.1
C318 0.1
5/9 AR_RST3
6/9 CLK18M
IC304 M65401FP REC 1
IC305 M65401FP REC 2
C301 0.01
IC301 TC74VHC541F-X
CN2 3B DAI LRCK 4A DAI BCK 4B DAI MCK 5B DAI DATA1/4 3A REC MUTE
CN2 3A DAI DATA3/2 6A DAI GND 6B DAI GND
R302 100k
CN2 7B AI DATA1/4 7A AI DATA3/2
IC303 TC7SH08F
256FS3 8/9
C359 0.01
CN2 1B 256FS 2A MCLKGND 2B MCLKGND
IC302.1 TC74VHC08F-X
IC302.2 TC74VHC08F-X
IC302.3 TC74VHC08F-X
IC302.4 TC74VHC08F-X
9/9 AINS_EN
R325 10k
C302 0.01
8/9 PB MCK
C307 0.01
C308 0.01
SASEN 1/9
SASDT3
SASDT2
SASDT1
SASDT0
SASA(3:0) 1/9
FRP
ISM
PWMO
FS1
FS0
VCO1
C309 0.01
C306 0.01
9/9 R_I2C(7:0)
2/9 BDA(10:0)
1/9 R_FRP
C304 0.01
C303 0.01
C314 0.01
C311 0.01
C312 0.01
C313 0.01
C315 0.01
C316 0.01
TP401
BDB(10:0) 2/11
SASB(3:0) 1/9
8/9 PB VOSC
(D85, D90)

— DIAGRAM 8/9 —

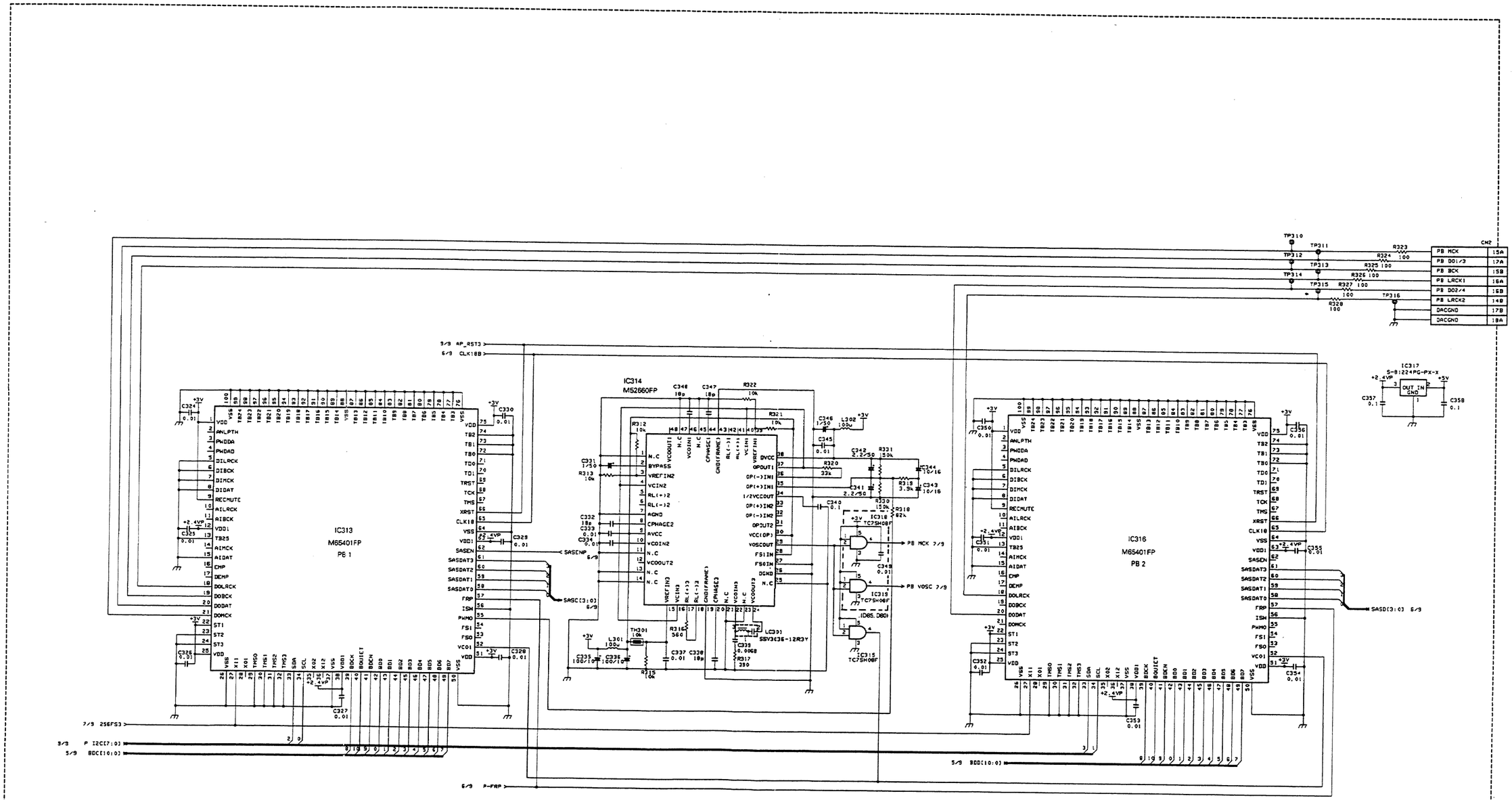

4-46

— DIAGRAM 9/9 —

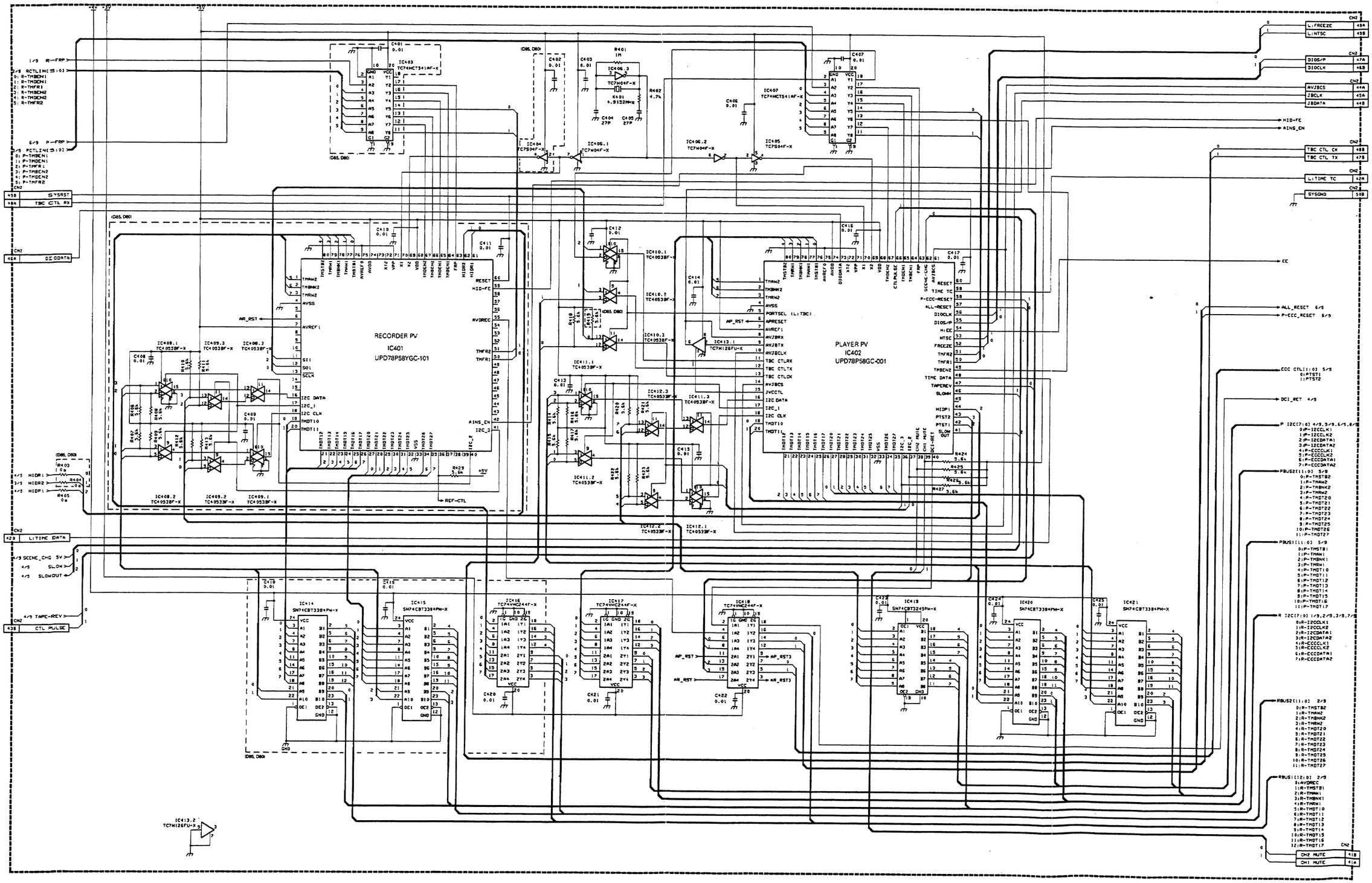

4-47

4-47

— INNER PATTERN (SIDE A) —

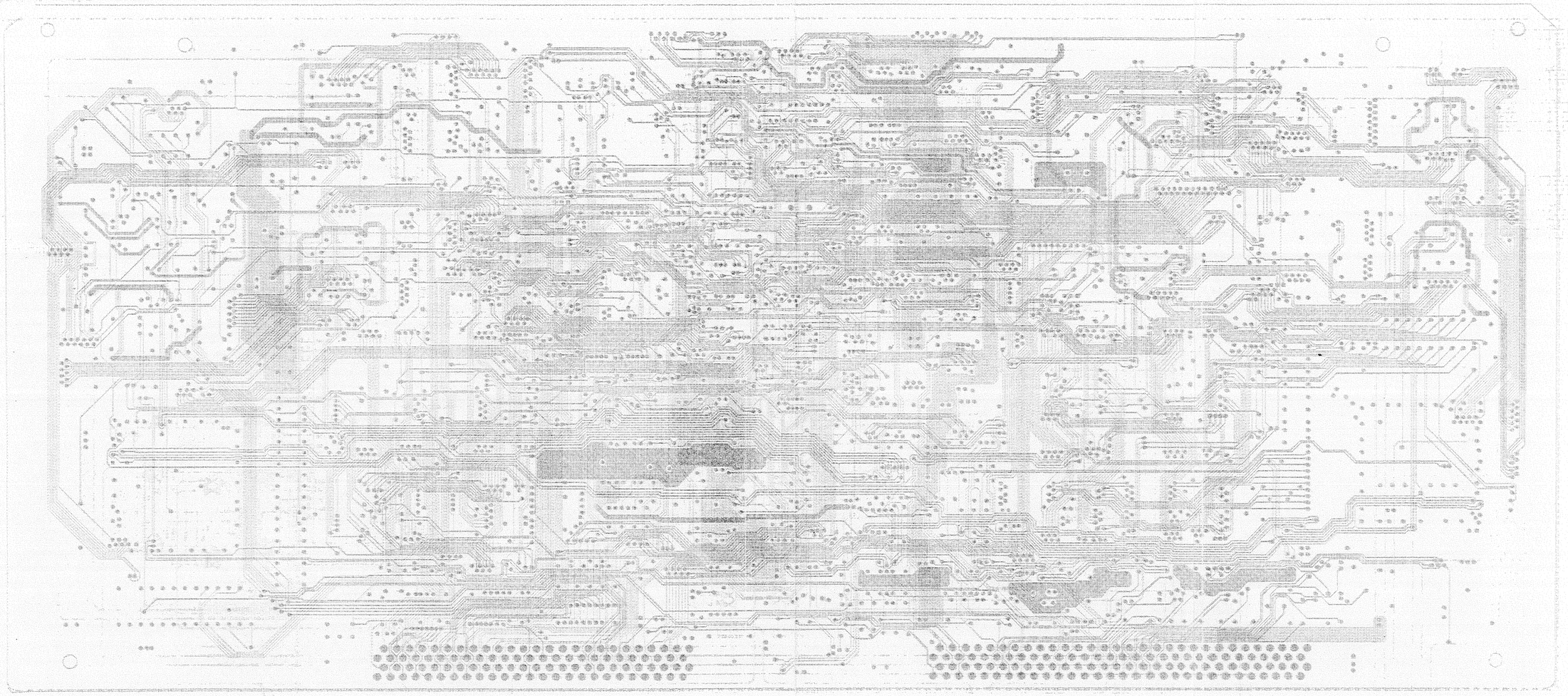

4-48

4.25 PV PROCESS CIRCUIT BOARDS

— SIDE A —

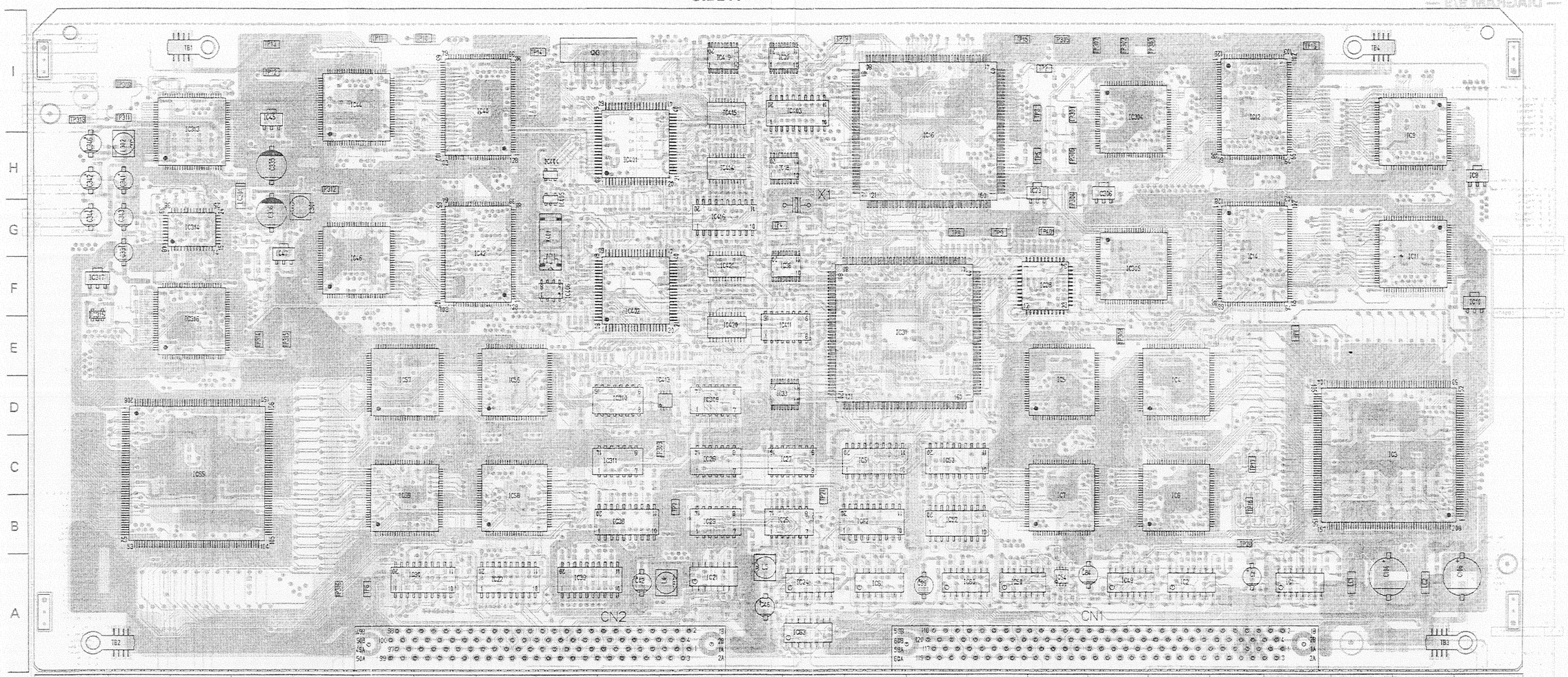

ADDRESS TABLE OF BOARD PARTS

Side — A-1C — Y axis / X axis

Each address may have an address error by one interval.

IC1	A- 21A	IC24	A- 13A	IC47	A- 4G	IC306	A- 18G	IC411	A- 12E	R10	B- 21B	R33	B- 13G	R56	B- 13B	R79	B- 10C	R102	B- 18B	R125	B- 14C	R148	B- 14A	R171	B- 15E	R310	B- 17F	R401	B- 9F	R424	B- 12F
IC2	A- 19A	IC25	A- 12B	IC48	B- 12B	IC307	B- 9D	IC412	B- 12I	R11	B- 21B	R34	B- 12A	R57	B- 13B	R80	B- 10C	R103	B- 18A	R126	B- 14C	R149	B- 14A	R172	B- 13E	R311	B- 11C	R402	B- 9G	R425	B- 11F
IC3	A- 22C	IC26	A- 11C	IC49	A- 18A	IC308	B- 11D	IC413	A- 10D	R12	B- 21B	R35	B- 12A	R58	B- 12B	R81	B- 9B	R104	B- 18A	R127	B- 14C	R150	B- 14A	R173	B- 13E	R312	B- 3G	R403	B- 9I	R426	B- 11F
IC4	A- 19D	IC27	A- 12C	IC50	A- 16A	IC309	A- 11D	IC414	A- 11H	R13	B- 19A	R36	B- 12B	R59	B- 6A	R82	B- 9A	R105	B- 18A	R128	B- 14C	R151	B- 14B	R174	B- 15C	R313	B- 3G	R404	B- 9I	R427	B- 11F
IC5	A- 17D	IC28	A- 17F	IC51	A- 14C	IC310	A- 9D	IC415	A- 11I	R14	B- 19A	R37	B- 11A	R60	B- 6A	R83	B- 9B	R106	B- 18A	R129	B- 14C	R152	B- 13B	R175	B- 15C	R315	B- 4F	R405	B- 10G	R428	B- 10H
IC6	A- 19C	IC29	A- 11B	IC52	A- 15B	IC311	A- 9C	IC416	A- 11G	R15	B- 19A	R38	B- 11A	R61	B- 6A	R84	B- 9A	R107	B- 16A	R130	B- 15B	R153	B- 14B	R176	B- 16F	R316	B- 4G	R406	B- 11H	R429	B- 10H
IC7	A- 17C	IC30	A- 6A	IC53	A- 15C	IC313	A- 3H	IC417	B- 10E	R16	B- 20A	R39	B- 11B	R62	B- 7A	R85	B- 9B	R108	B- 16A	R131	B- 15B	R154	B- 14B	R177	B- 9I	R317	B- 4G	R407	B- 11H		
IC8	A- 24H	IC31	A- 14E	IC54	A- 17A	IC314	A- 3G	IC418	B- 10G	R17	B- 19A	R40	B- 8A	R63	B- 7A	R86	B- 10A	R109	B- 17A	R132	B- 16B	R155	B- 14B	R178	B- 10I	R318	B- 3G	R408	B- 11H	C1	A- 20A
IC9	A- 23H	IC32	B- 13D	IC55	A- 3C	IC315	A- 1F	IC419	A- 11I	R18	B- 20A	R41	B- 8A	R64	B- 7A	R87	B- 10B	R110	B- 16A	R133	B- 16B	R156	B- 13A	R179	B- 10I	R319	B- 2G	R409	B- 11H	C2	B- 20B
IC10	A- 24F	IC33	A- 12D	IC56	A- 8D	IC316	A- 3E	IC420	A- 11E	R19	B- 20B	R42	B- 8A	R65	B- 6B	R88	B- 10A	R111	B- 17A	R134	B- 15B	R157	B- 12A	R180	B- 17A	R320	B- 3G	R410	B- 11I	C3	B- 19B
IC11	A- 23G	IC34	B- 15D	IC57	A- 6D	IC317	A- 1F	IC421	A- 11F	R20	B- 19B	R43	B- 8A	R66	B- 7A	R89	B- 15C	R112	B- 17B	R135	B- 15A	R158	B- 13A	R181	B- 6A	R321	B- 3G	R411	B- 11I	C4	B- 22D
IC12	A- 20I	IC35	B- 13F	IC58	A- 8C	IC318	B- 2E			R21	B- 20B	R44	B- 8A	R67	B- 7A	R90	B- 15C	R113	B- 16A	R136	B- 15A	R159	B- 13A	R182	B- 15C	R322	B- 3G	R412	B- 11I	C5	B- 23D
IC13	B- 22H	IC36	A- 12F	IC59	A- 6C	IC319	B- 2F	Q1	B- 14B	R22	B- 19B	R45	B- 8A	R68	B- 7A	R91	B- 16C	R114	B- 17A	R137	B- 16A	R160	B- 4A	R183	B- 15C	R323	B- 3H	R413	B- 12I	C6	B- 22C
IC14	A- 20G	IC37	B- 15F	IC60	A- 15A	IC401	A- 10H			R23	B- 19B	R46	B- 9A	R69	B- 7A	R92	B- 16C	R115	B- 17A	R138	B- 15A	R161	B- 2D	R184	B- 14B	R324	B- 3H	R414	B- 12E	C7	B- 23C
IC15	B- 22F	IC38	A- 9B	IC61	A- 14A	IC402	A- 10F	R1	B- 20A	R24	B- 19B	R47	B- 12A	R70	B- 7A	R93	B- 15C	R116	B- 16A	R139	B- 16A	R162	B- 2D	R301	B- 17G	R325	B- 3H	R415	B- 12E	C8	B- 22C
IC16	A- 15H	IC39	A- 9A	IC62	A- 13B	IC403	A- 12I	R2	B- 21A	R25	B- 21E	R48	B- 13A	R71	B- 7A	R94	B- 15C	R117	B- 20D	R140	B- 16A	R163	B- 2C	R302	B- 17G	R326	B- 3H	R416	B- 12E	C9	B- 19E
IC17	B- 14H	IC40	A- 8I	IC63	A- 13A	IC404	A- 9H	R3	B- 20A	R26	B- 22C	R49	B- 12A	R72	B- 7A	R95	B- 17A	R118	B- 20B	R141	B- 15A	R164	B- 4D	R303	B- 17I	R327	B- 3E	R417	B- 13E	C10	B- 17E
IC18	A- 12H	IC41	B- 7H	IC64	B- 20C	IC405	A- 9G	R4	B- 21A	R27	B- 23C	R50	B- 13A	R73	B- 10B	R96	B- 17A	R119	B- 20D	R142	B- 15A	R165	B- 4D	R304	B- 17I	R328	B- 3E	R418	B- 9E	C11	B- 19C
IC19	B- 14I	IC42	A- 8G	IC301	B- 16F	IC406	A- 9F	R5	B- 21A	R28	B- 23C	R51	B- 13A	R74	B- 10C	R97	B- 18A	R120	B- 21B	R143	B- 14A	R166	B- 2D	R305	B- 17I	R329	B- 19G	R419	B- 9E	C12	B- 17C
IC20	A- 12I	IC43	B- 7F	IC302	B- 19F	IC407	B- 9G	R6	B- 21A	R29	B- 22C	R52	B- 13A	R75	B- 10C	R98	B- 18A	R121	B- 20B	R144	B- 14A	R167	B- 9I	R306	B- 17G	R330	B- 2H	R420	B- 13H	C13	B- 24H
IC21	A- 11A	IC44	A- 6I	IC303	B- 19F	IC408	B- 11H	R7	B- 21B	R30	B- 22C	R53	B- 13B	R76	B- 10C	R99	B- 19A	R122	B- 20B	R145	B- 14A	R168	B- 9I	R307	B- 17H	R331	B- 2H	R421	B- 13H	C14	B- 24H
IC22	A- 8A	IC45	A- 4I	IC304	A- 18I	IC409	B- 11I	R8	B- 21B	R31	B- 23C	R54	B- 13B	R77	B- 10C	R100	B- 18A	R123	B- 14C	R146	B- 14A	R169	B- 10I	R308	B- 17H	R332	B- 4F	R422	B- 12I	C15	B- 23H
IC23	A- 17G	IC46	A- 6F	IC305	A- 18F	IC410	B- 9E	R9	B- 21B	R32	B- 13G	R55	B- 13B	R78	B- 10C	R101	B- 18A	R124	B- 14C	R147	B- 14A	R170	B- 16H	R309	B- 17I	R333	B- 4F	R423	B- 13I	C16	B- 23H

4-48

— SIDE B —

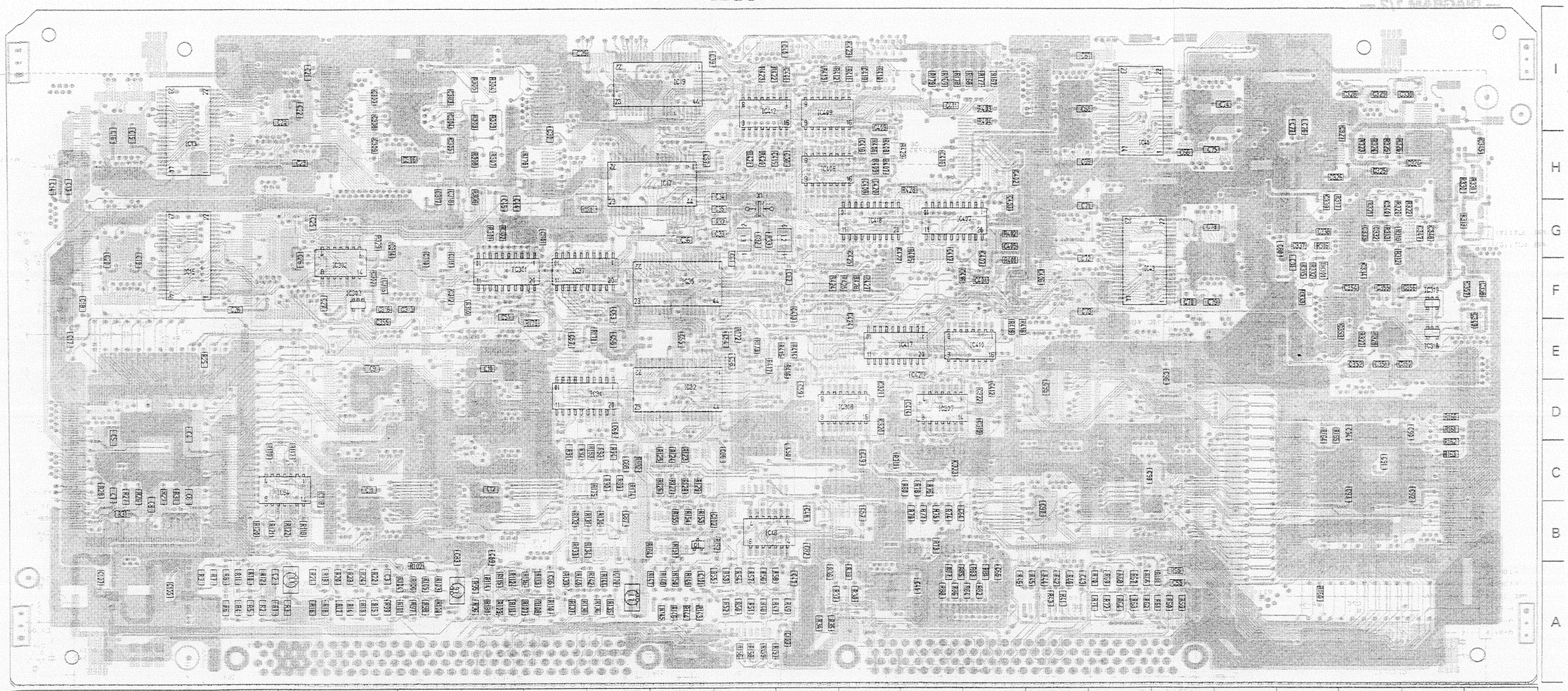

C17	B- 24E	C40	B- 12I	C63	B- 15F	C86	B- 13C	C301	B- 16G	C324	B- 2H	C347	B- 2G	C411	B- 10I	L301	A- 5G	TP21	A- 13C	LC1	A- 22A
C18	B- 23F	C41	B- 10A	C64	B- 9C	C87	B- 15B	C302	B- 19F	C325	B- 3H	C348	B- 2G	C412	B- 9D	L302	A- 2H	TP301	A- 17I	LC2	A- 23A
C19	B- 22G	C42	A- 10A	C65	B- 9B	C88	B- 15C	C303	B- 18I	C326	B- 4H	C349	B- 1F	C413	B- 12F			TP302	A- 18I	LC301	A- 4G
C20	B- 23G	C43	B- 8A	C66	B- 6H	C89	B- 17B	C304	B- 18I	C327	B- 4H	C350	B- 3E	C414	B- 10D	TP1	A- 21E	TP303	A- 18I		
C21	B- 20I	C44	B- 17G	C67	B- 8I	C90	B- 2D	C305	B- 18H	C328	B- 3I	C351	B- 3E	C415	B- 12H	TP2	A- 17I	TP304	A- 17G	TB1	A- 3I
C22	B- 20I	C45	B- 17G	C68	B- 8I	C91	B- 3C	C306	B- 18H	C329	B- 3I	C352	B- 3E	C416	B- 9F	TP3	A- 17I	TP305	A- 17I	TB2	A- 1A
C23	B- 20H	C46	A- 12A	C69	B- 8H	C92	B- 2C	C307	B- 19I	C330	B- 3I	C353	B- 4E	C417	B- 10G	TP4	A- 12G	TP306	A- 17H	TB3	A- 24A
C24	B- 20I	C47	B- 12A	C70	B- 6F	C93	B- 3C	C308	B- 19I	C331	A- 2G	C354	B- 3F	C418	B- 11H	TP5	A- 17H	TP307	A- 18I	TB4	A- 22I
C25	B- 20G	C48	B- 12C	C71	B- 8G	C94	B- 3D	C309	B- 19H	C332	B- 3G	C355	B- 3F	C419	B- 11I	TP6	A- 6A	TP308	A- 18E		
C26	B- 20G	C49	B- 11C	C72	B- 8G	C95	B- 8D	C310	B- 18G	C333	B- 3G	C356	B- 3F	C420	B- 11H	TP7	A- 11B	TP309	A- 10C	TH301	B- 4F
C27	B- 20F	C50	B- 12C	C73	B- 8F	C96	B- 6E	C311	B- 18G	C334	B- 3F	C357	B- 2F	C421	B- 10E	TP8	A- 15G	TP310	A- 2I		
C28	B- 21F	C51	B- 17F	C74	B- 5I	C97	B- 8C	C312	B- 18F	C335	A- 4H	C358	B- 1F	C422	B- 10G	TP9	A- 16G	TP311	A- 2I	X1	A- 13G
C29	B- 16I	C52	B- 11C	C75	B- 6H	C98	B- 7C	C313	B- 18F	C336	A- 4G	C359	B- 19F	C423	B- 11I	TP10	A- 7I	TP312	A- 5H	X401	A- 9G
C30	B- 16H	C53	B- 6A	C76	B- 4I	C99	A- 15A	C314	B- 18G	C337	B- 4G	C401	B- 12I	C424	B- 11F	TP11	A- 6I	TP313	A- 1I		
C31	B- 15G	C54	B- 13E	C77	B- 4I	C100	B- 15A	C315	B- 19F	C338	B- 4G	C402	B- 9H	C425	B- 11G	TP12	A- 4I	TP314	A- 4E		
C32	B- 13G	C55	B- 14E	C78	B- 6G	C101	B- 14A	C316	B- 19F	C339	B- 4G	C403	B- 9G			TP13	A- 4I	TP315	A- 4E		
C33	B- 13G	C56	B- 15E	C79	B- 6F	C102	B- 13B	C317	B- 18G	C340	B- 3G	C404	B- 9F	L1	B- 20A	TP14	A- 9I	TP316	A- 5A		
C34	B- 13G	C57	B- 16E	C80	B- 5G	C103	B- 12A	C318	B- 18G	C341	A- 2H	C405	B- 9G	L2	B- 12G	TP15	A- 16I	TP401	A- 17G		
C35	B- 13G	C58	B- 13E	C81	B- 4F	C104	A- 22A	C319	B- 9D	C342	A- 1H	C406	B- 8F	L3	B- 13G	TP16	A- 21I				
C36	B- 14G	C59	B- 12D	C82	B- 12B	C105	B- 22A	C320	B- 11D	C343	A- 2G	C407	B- 9G	L4	A- 11A	TP17	A- 20C	CN1	A- 18A		
C37	B- 14H	C60	B- 15D	C83	B- 17B	C106	A- 23A	C321	B- 11D	C344	A- 1G	C408	B- 11H	L5	A- 12A	TP18	A- 20B	CN2	A- 9A		
C38	B- 12H	C61	B- 13G	C84	A- 17A	C107	B- 23B	C322	B- 9D	C345	B- 1H	C409	B- 11I	L6	B- 17A	TP19	A- 13I	CN3	A- 9I		
C39	B- 13I	C62	B- 12F	C85	B- 16A	C108	B- 20C	C323	B- 10C	C346	A- 1H	C410	B- 10H	L7	B- 15A	TP20	A- 20B				

4-49

— INNER PATTER (SIDE B) —

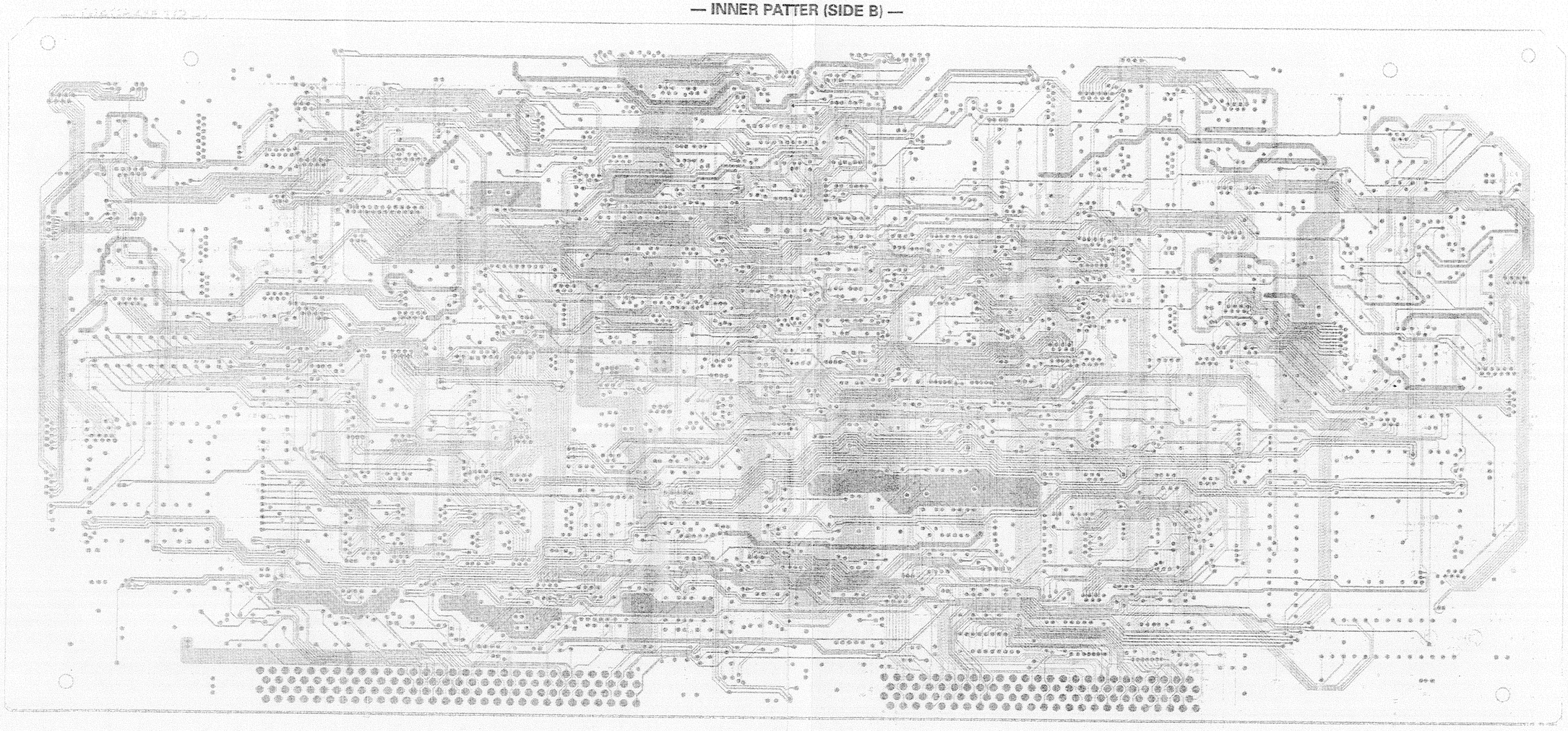

4-49

4.26 RF PROCESS-1 SCHEMATIC DIAGRAMS

— DIAGRAM 1/2 —

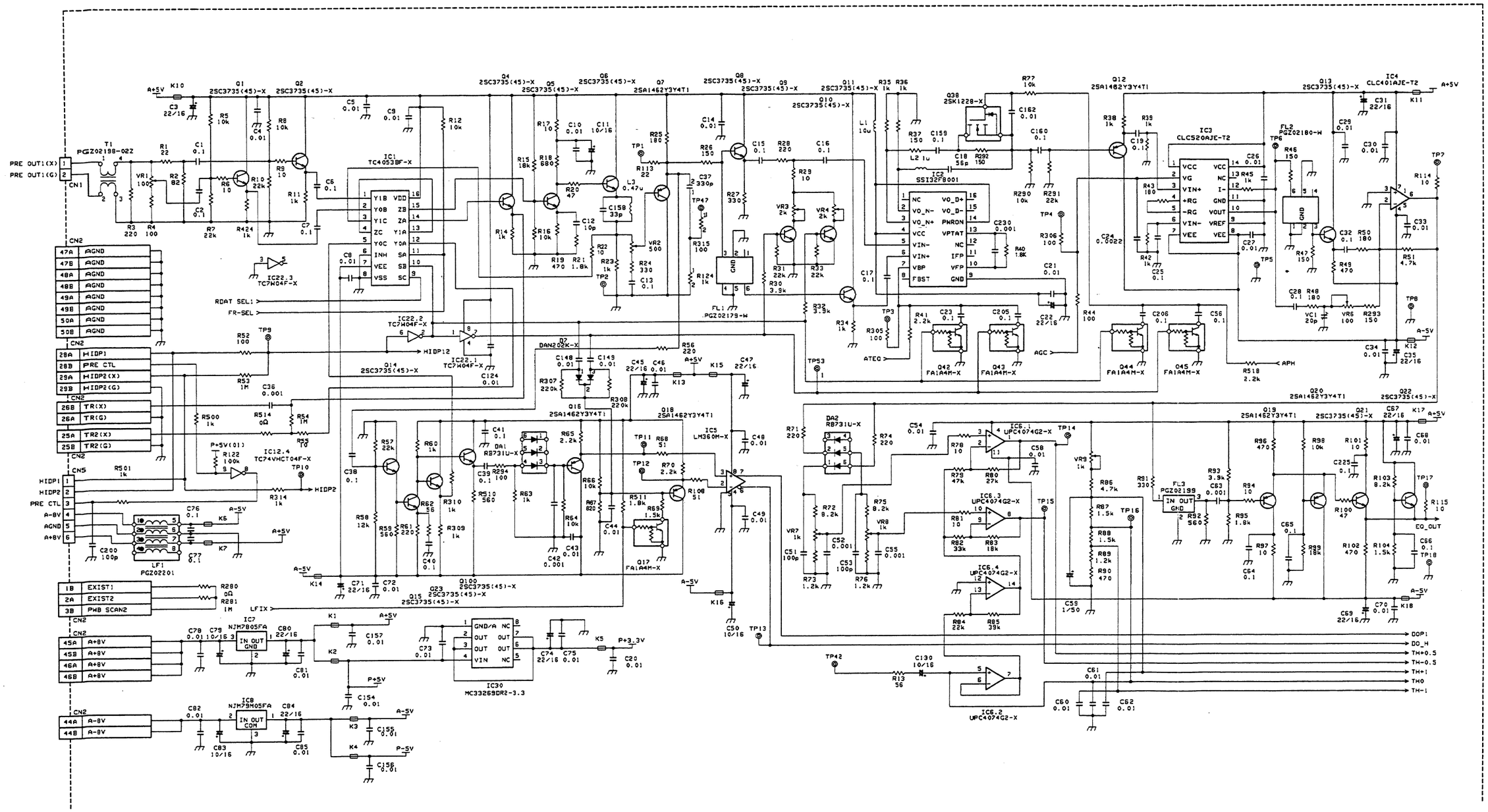

4-50

— DIAGRAM 2/2 —

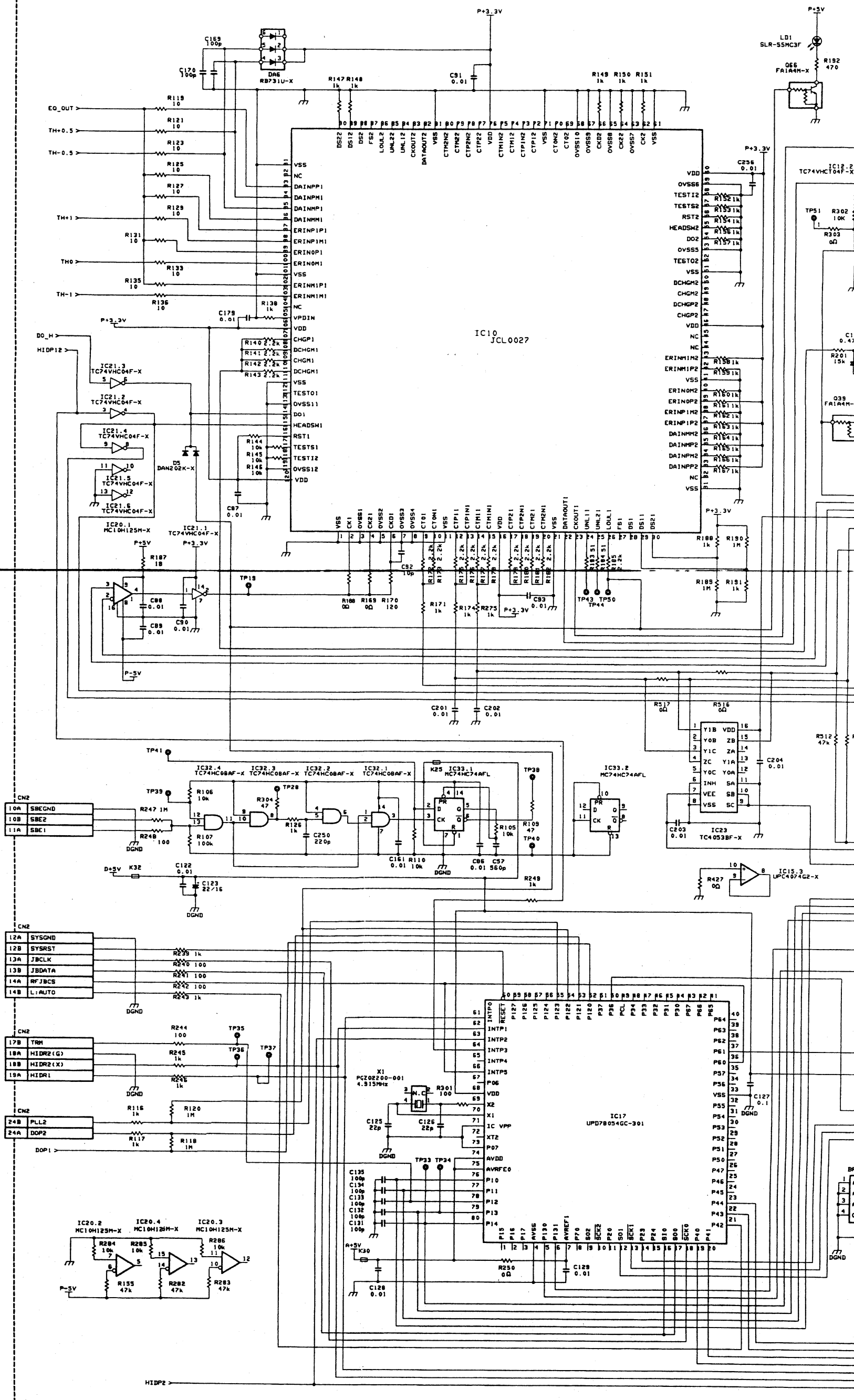
P+3.3V
P+5V
P-5V
D+5V
A+5V
DGND
IC10 JCL0027
IC17 UPD78054GC-301
IC23 TC4053BF-X
IC33.1 MC74HC74AFL
IC33.2 MC74HC74AFL
IC32.1 TC74HC08AF-X
IC32.2 TC74HC08AF-X
IC32.3 TC74HC08AF-X
IC32.4 TC74HC08AF-X
IC21.1 TC74VHC04F-X
IC21.2 TC74VHC04F-X
IC21.3 TC74VHC04F-X
IC21.4 TC74VHC04F-X
IC21.5 TC74VHC04F-X
IC21.6 TC74VHC04F-X
IC20.1 MC10H125M-X
IC20.2 MC10H125M-X
IC20.3 MC10H125M-X
IC20.4 MC10H125M-X
IC15.3 UPC4074G2-X
IC12.2 TC74VHCT04F-X
X1 PCZ02200-001 4.915MHz
EQ_OUT
TH+0.5
TH-0.5
TH+1
TH0
TH-1
DO_H
HIDP12
HIDP2
DOP1
CN2
10A SBEGND
10B SBE2
11A SBE1
12A SYSGND
12B SYSRST
13A JBCLK
13B JBDATA
14A RFJBCS
14B L:AUTO
17B TRM
18A HIDR2(G)
18B HIDR2(X)
19A HIDR1
24B PLL2
24A DOP2
LD1 SLR-55MC3F
Q66 FA1A4M-X
Q39 FA1A4M-
D5 DAN202K-X
DA6 RB731U-X

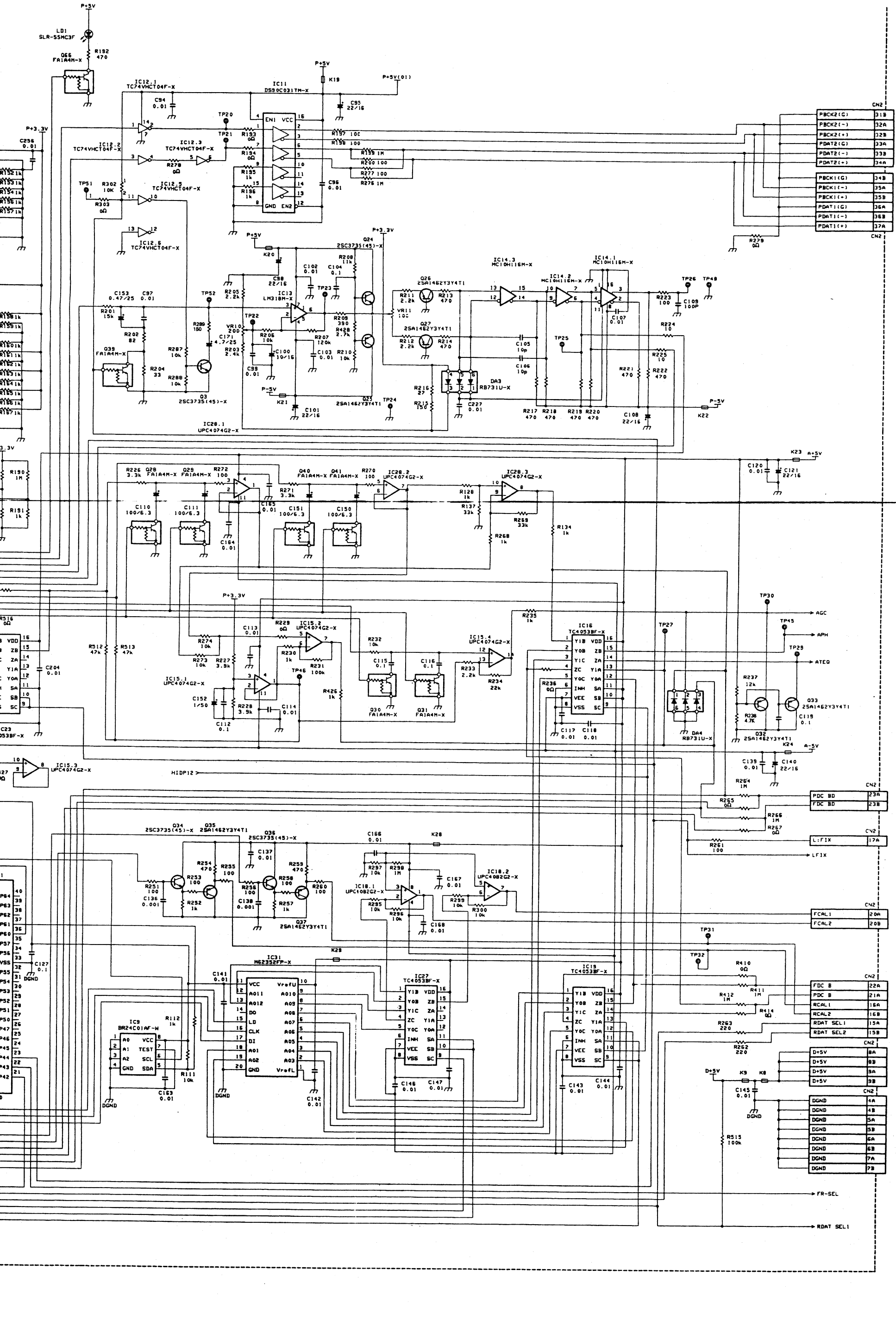
P+5V
LD1
SLR-55MC3F
Q66
FA1A4M-X
R192
470
IC12.1
TC74VHCT04F-X
IC11
DS90C031TM-X
C94
0.01
K19
C95
22/16
P+5V(01)
TP20
TP21
P+3.3V
C256
0.01
IC12.2
TC74VHCT04F-X
IC12.3
TC74VHCT04F-X
R193
0Ω
R194
0Ω
R278
0Ω
R195
1k
R196
1k
EN1 VCC
GND EN2
R197 10C
R198 100
R199 1M
R200 100
R277 100
R276 1M
C96
0.01
CN2
PBCK2(G) 31B
PBCK2(-) 32A
PBCK2(+) 32B
PDAT2(G) 33A
PDAT2(-) 33B
PDAT2(+) 34A
PBCK1(G) 34B
PBCK1(-) 35A
PBCK1(+) 35B
PDAT1(G) 36A
PDAT1(-) 36B
PDAT1(+) 37A
R229
0Ω
TP51
R302
10K
R303
0Ω
IC12.5
TC74VHCT04F-X
IC12.6
TC74VHCT04F-X
P+5V
K20
C98
22/16
P+3.3V
Q24
2SC3735(45)-X
C102
0.01
C104
0.1
R208
11k
TP23
IC13
LM318M-X
C153
0.47/25
C97
0.01
TP52
R205
2.2k
R201
15k
R202
82
R204
33
Q39
FA1A4M-X
R289
150
R287
10k
R288
10k
C171
4.7/25
VR10
200
R203
2.4k
TP22
R206
10k
C100
10/16
C99
0.01
R207
120k
C103
0.01
R210
10k
R209
390
R428
2.7k
Q3
2SC3735(45)-X
P-5V
K21
C101
22/16
Q25
2SA1462Y3Y4T1
TP24
R216
27
R215
150
C227
0.01
IC28.1
UPC4074G2-X
IC14.3
MC10H116M-X
IC14.1
MC10H116M-X
IC14.2
MC10H116M-X
Q26
2SA1462Y3Y4T1
R211
2.2k
R213
470
Q27
2SA1462Y3Y4T1
R212
2.2k
R214
470
VR11
10C
TP26
TP48
R223
100
C109
100P
C107
0.01
R224
10
TP25
R225
10
R221
470
R222
470
C105
10p
C106
10p
DA3
RB731U-X
R217
470
R218
470
R219
470
R220
470
C108
22/16
P-5V
K22
K23
A+5V
C120
0.01
C121
22/16
R226
3.3k
Q28
FA1A4M-X
Q29
FA1A4M-X
R272
100
IC28.2
UPC4074G2-X
R271
3.3k
Q40
FA1A4M-X
Q41
FA1A4M-X
R270
100
C165
0.01
C110
100/6.3
C111
100/6.3
C164
0.01
C151
100/6.3
C150
100/6.3
IC28.3
UPC4074G2-X
R128
1k
R137
33k
R269
33k
R268
1k
R134
1k
P+3.3V
R229
0Ω
IC15.2
UPC4074G2-X
C113
0.01
R224
10k
R273
10k
R227
3.8k
R230
1k
R231
100k
TP46
IC15.1
UPC4074G2-X
C152
1/50
R228
3.9k
C112
0.1
C114
0.01
R426
1k
R232
10k
C115
0.1
Q30
FA1A4M-X
C116
0.1
Q31
FA1A4M-X
IC15.4
UPC4074G2-X
R233
2.2k
R234
22k
R235
1k
IC16
TC4053BF-X
R236
0Ω
C117
0.01
C118
0.01
DA4
RB731U-X
TP27
TP30
TP45
TP29
AGC
APH
ATEQ
R237
12k
R238
4.7K
Q33
2SA1462Y3Y4T1
C119
0.1
Q32
2SA1462Y3Y4T1
K24
A-5V
C139
0.01
C140
22/16
R512
47k
R513
47k
C204
0.01
R516
0Ω
C23
053BF-X
IC15.3
UPC4074G2-X
HIDP12
R264
1M
R265
0Ω
R266
1M
R267
0Ω
CN2
PDC BD 23A
PDC BD 23B
L:FIX 17A
LF1X
FCAL1 20A
FCAL2 20B
FDC B 22A
FDC B 21A
RCAL1 16A
RCAL2 16B
RDAT SEL1 15A
RDAT SEL2 15B
D+5V 8A
D+5V 8B
D+5V 9A
D+5V 9B
DGND 4A
DGND 4B
DGND 5A
DGND 5B
DGND 6A
DGND 6B
DGND 7A
DGND 7B
FR-SEL
RDAT SEL1
Q34
2SC3735(45)-X
Q35
2SA1462Y3Y4T1
Q36
2SC3735(45)-X
C137
0.01
R254
470
R255
100
R253
100
R252
1k
R256
100
R258
100
R259
470
R260
100
R257
1k
R251
100
C136
0.001
C138
0.001
Q37
2SA1462Y3Y4T1
C166
0.01
K28
R297
10k
R298
1M
C167
0.01
IC18.1
UPC4082G2-X
IC18.2
UPC4082G2-X
R295
10k
R296
10k
R299
10k
R300
10k
C168
0.01
TP31
TP32
R410
0Ω
R411
1M
R412
1M
R414
0Ω
R263
220
R262
220
R515
100k
C145
0.01
K9
K8
C127
0.1
DGND
IC9
BR24C01AF-W
R112
1k
R111
10k
C163
0.01
IC31
M62352FP-X
C141
0.01
C142
0.01
K29
IC27
TC4053BF-X
C146
0.01
C147
0.01
IC19
TC4053BF-X
C143
0.01
C144
0.01
Y1B VDD
Y0B ZB
Y1C ZA
ZC Y1A
Y0C Y0A
INH SA
VEE SB
VSS SC
VCC VrefU
A011 A010
A012 A09
DO A08
LD A07
CLK A06
DI A05
A01 A04
A02 A03
GND VrefL
A0 VCC
A1 TEST
A2 SCL
GND SDA

4.27 RF PROCESS CIRCUIT BOARDS

— SIDE A —

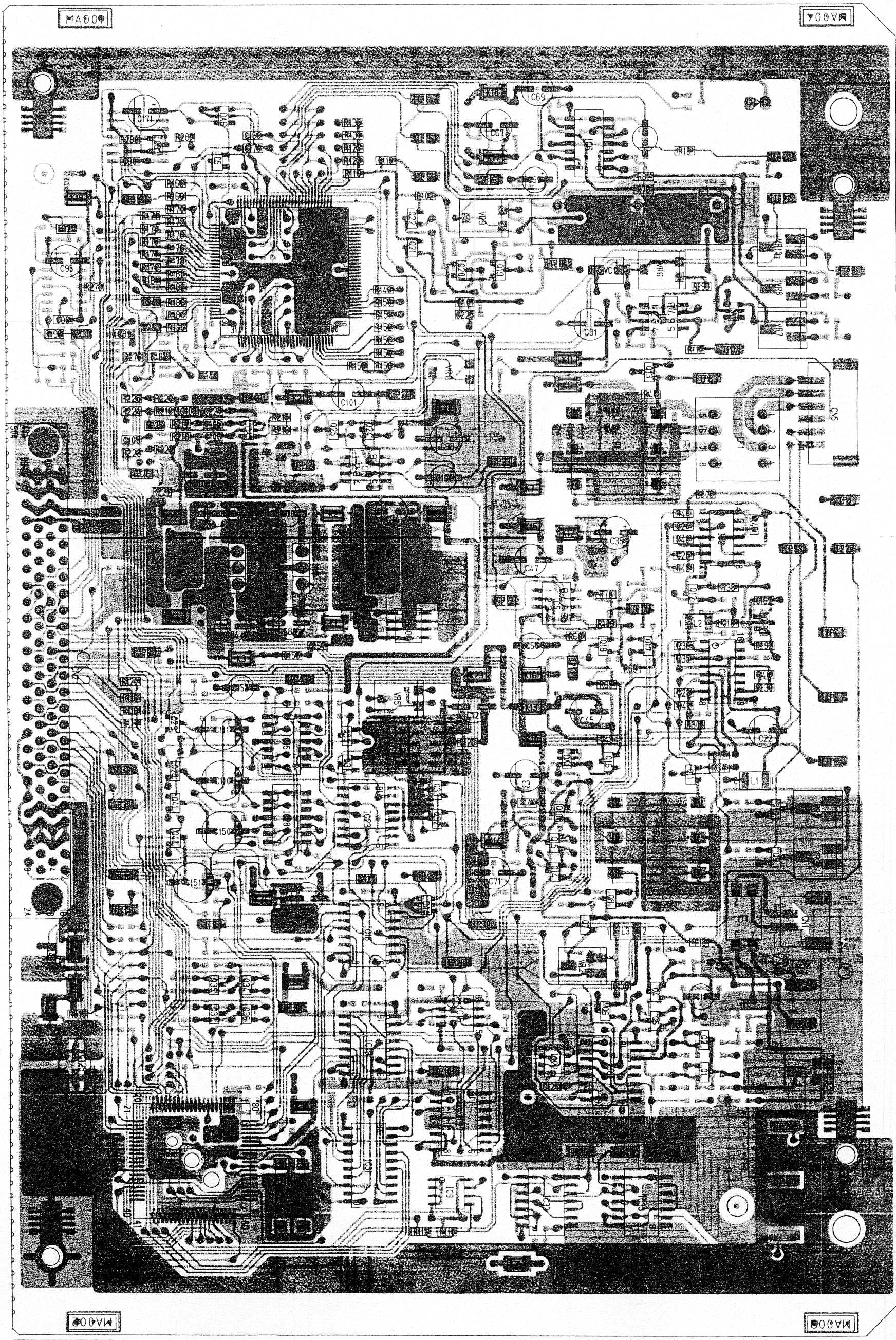

— SIDE B —

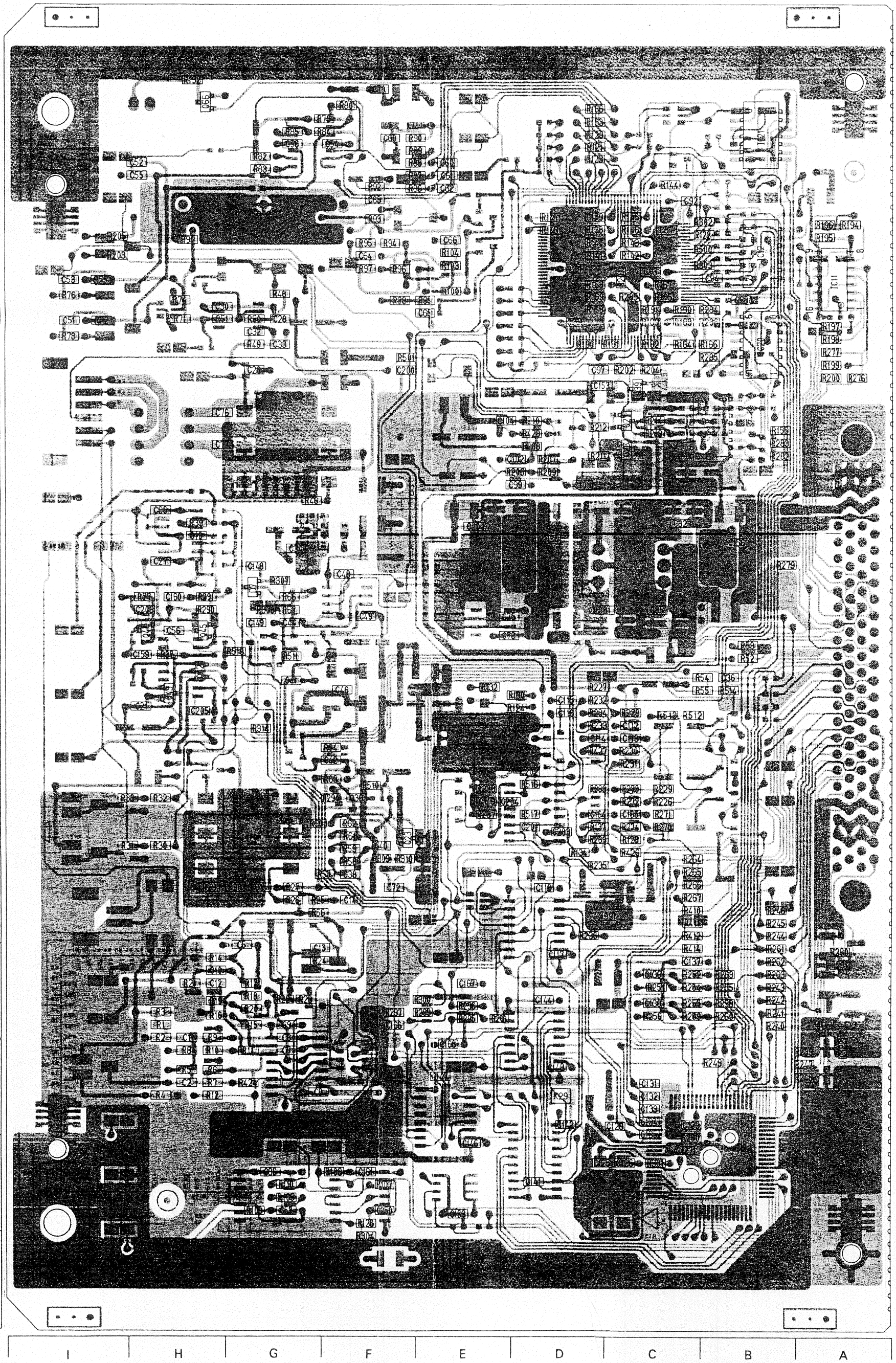

● ADDRESS TABLE OF BOARD PARTS

Side — A-1C (Y axis / X axis)

Each address may have an address error by one interval.

IC1	A- 11G	R2	B- 11H	R84	B- 2G	R167	B- 3D	R250	B- 12C	VR1	A- 12I	C72	B- 10F	C154	B- 6E	TP45	A- 10E
IC2	A- 7H	R3	B- 11H	R85	B- 2G	R168	A- 2C	R251	B- 11D	VR2	A- 11G	C73	B- 7E	C155	A- 7D	TP46	A- 8D
IC3	A- 6H	R4	B- 12H	R86	B- 2F	R169	A- 2C	R252	B- 11C	VR3	A- 9I	C74	A- 6E	C156	B- 6C	TP49	A- 5D
IC4	A- 4G	R5	B- 12H	R87	B- 2F	R170	A- 3C	R253	B- 11C	VR4	A- 9I	C75	B- 7E	C157	A- 7D	TP50	A- 4C
IC5	A- 7F	R6	B- 12H	R88	B- 2F	R171	A- 3C	R254	B- 11C	VR5	A- 8E	C76	B- 5H	C158	A- 11G	TP51	A- 3I
IC6	A- 2G	R7	B- 12H	R89	B- 2F	R172	A- 3C	R255	B- 11C	VR6	A- 3G	C77	B- 5H	C159	B- 7H	TP52	A- 5D
IC7	A- 6D	R8	B- 12H	R90	B- 2F	R173	A- 3C	R256	B- 11D	VR7	A- 4H	C78	B- 6D	C160	B- 7H	TP53	A- 6I
IC8	A- 6D	R9	B- 11H	R91	B- 3H	R174	A- 3C	R257	B- 11C	VR8	A- 3H	C79	A- 6D	C161	B- 13F		
IC9	A- 13E	R10	B- 12H	R92	B- 2F	R175	A- 3C	R258	B- 11C	VR9	A- 3F	C80	A- 7D	C162	A- 7H	FL1	A- 9G
IC10	A- 3D	R11	B- 12G	R93	B- 3F	R176	A- 3C	R259	B- 11C	VR10	A- 3H	C81	B- 7D	C163	B- 13E	FL2	A- 5G
IC11	B- 4B	R12	B- 12H	R94	B- 3F	R177	A- 3C	R260	B- 11C	VR11	A- 4E	C82	B- 6C	C164	B- 9D	FL3	A- 3F
IC12	B- 3C	R13	A- 2H	R95	B- 3F	R178	A- 3C	R261	B- 10C			C83	A- 6C	C165	B- 9D		
IC13	A- 5E	R14	B- 11H	R96	B- 3F	R179	A- 3C	R262	B- 11C	C1	B- 11H	C84	A- 7C	C166	B- 11F	K1	A- 7D
IC14	B- 5C	R15	B- 11G	R97	B- 3F	R180	A- 3C	R263	B- 11C	C2	B- 12H	C85	B- 7D	C167	B- 11E	K2	A- 6D
IC15	A- 8D	R16	B- 11H	R98	B- 4F	R181	A- 3C	R264	B- 9C	C3	A- 9F	C86	B- 13G	C168	B- 11E	K3	A- 7D
IC16	A- 10E	R17	B- 11G	R99	B- 4F	R182	A- 3C	R265	B- 10C	C4	A- 9F	C87	B- 3D	C169	A- 2D	K4	A- 7C
IC17	A- 13C	R18	B- 11G	R100	B- 3E	R183	A- 4C	R266	B- 10C	C5	B- 10G	C88	B- 4C	C170	A- 2D	K5	A- 6E
IC18	A- 11E	R19	B- 11H	R101	A- 4F	R184	A- 4C	R267	B- 10C	C6	B- 11G	C89	A- 4C	C171	A- 2C	K6	A- 4G
IC19	A- 11E	R20	B- 11G	R102	A- 2E	R185	A- 4C	R268	B- 9D	C7	B- 12G	C90	A- 2C	C179	B- 3D	K7	A- 6F
IC20	B- 4C	R21	B- 11H	R103	B- 3E	R187	A- 4C	R269	B- 9D	C8	B- 12G	C91	B- 3D	C200	B- 4F	K8	A- 10B
IC21	B- 2C	R22	B- 11G	R104	B- 3E	R188	B- 4C	R270	B- 9D	C9	B- 11G	C92	B- 3C	C201	B- 9E	K9	A- 11B
IC22	A- 12F	R23	B- 11G	R105	B- 13G	R189	B- 4D	R271	B- 9D	C10	B- 11H	C93	B- 3D	C202	B- 9E	K10	A- 8F
IC23	A- 9E	R24	B- 11G	R106	B- 13G	R190	B- 4C	R272	B- 9D	C11	A- 11H	C94	B- 3C	C203	B- 9D	K11	A- 4G
IC27	A- 12E	R25	B- 10G	R107	B- 13F	R191	B- 4D	R273	B- 9D	C12	B- 11H	C95	A- 3B	C204	B- 9E	K12	A- 6G
IC28	A- 9D	R26	B- 10G	R108	A- 7G	R192	B- 1H	R274	B- 9D	C13	B- 10G	C96	A- 4B	C205	B- 8H	K13	A- 8F
IC30	A- 7E	R27	B- 10G	R109	B- 13G	R193	A- 4B	R275	A- 4C	C14	B- 10F	C97	B- 4D	C206	B- 7H	K14	A- 9F
IC31	A- 12E	R28	B- 10G	R110	B- 13G	R194	B- 3B	R276	B- 4B	C15	B- 10G	C98	A- 5E	C225	A- 4F	K15	A- 6F
IC32	A- 13F	R29	B- 10H	R111	A- 13E	R195	B- 3B	R277	B- 4B	C16	B- 10G	C99	B- 6E	C227	A- 5C	K16	A- 8F
IC33	A- 13G	R30	B- 9H	R112	A- 13E	R196	B- 3B	R278	A- 3B	C17	A- 8H	C100	A- 5E	C230	A- 8H	K17	A- 2F
		R31	B- 9H	R113	A- 10H	R197	B- 4B	R279	B- 6B	C18	A- 7H	C101	A- 5E	C250	B- 13F	K18	A- 1F
Q1	A- 12H	R32	B- 9H	R114	A- 4H	R198	B- 4B	R280	B- 11B	C19	B- 6H	C102	B- 5E	C256	B- 4D	K19	A- 2B
Q2	A- 11H	R33	B- 9H	R115	A- 2E	R199	B- 4B	R281	B- 11B	C20	B- 6E	C103	B- 6D			K20	A- 5E
Q3	A- 2C	R34	A- 8H	R116	A- 8C	R200	B- 4B	R282	B- 5B	C21	B- 8H	C104	B- 5E	VC1	A- 3G	K21	A- 5D
Q4	A- 11G	R35	A- 7H	R117	A- 8C	R201	B- 3D	R283	B- 5B	C22	A- 8H	C105	A- 5C			K22	A- 6C
Q5	A- 11G	R36	A- 7H	R118	A- 8C	R202	B- 4D	R284	B- 4C	C23	A- 8H	C106	A- 5C	L1	A- 9H	K23	A- 8F
Q6	A- 11G	R37	B- 7H	R119	A- 2E	R203	B- 3H	R285	B- 4C	C24	A- 6H	C107	A- 5C	L2	A- 7H	K24	A- 10D
Q7	A- 10G	R38	A- 7H	R120	A- 8C	R204	B- 4D	R286	B- 4C	C25	A- 6H	C108	A- 5C	L3	A- 10G	K25	A- 14F
Q8	A- 10G	R39	B- 6H	R121	B- 2D	R205	B- 3H	R287	A- 2C	C26	B- 6H	C109	A- 5C			K28	A- 11D
Q9	A- 9H	R40	A- 8H	R122	B- 3C	R206	B- 5E	R288	A- 2C	C27	B- 6H	C110	A- 9C	TP1	A- 11I	K29	B- 12D
Q10	A- 9H	R41	A- 8H	R123	B- 2D	R207	B- 5E	R289	B- 4D	C28	B- 4G	C111	A- 8C	TP2	A- 11I	K30	A- 12D
Q11	A- 9H	R42	A- 6H	R124	B- 8E	R208	B- 5E	R290	B- 7H	C29	B- 4G	C112	B- 8D	TP3	A- 8I	K32	A- 11B
Q12	A- 7H	R43	A- 6H	R125	A- 2E	R209	B- 5E	R291	B- 7H	C30	B- 4H	C113	B- 8D	TP4	A- 7I		
Q13	A- 4G	R44	A- 6H	R126	B- 13F	R210	B- 5E	R292	A- 7H	C31	A- 4G	C114	B- 8D	TP5	A- 6I	LD1	A- 2H
Q14	A- 10F	R45	A- 6H	R127	A- 2E	R211	B- 5D	R293	A- 3H	C32	B- 4G	C115	B- 8D	TP6	A- 8I		
Q15	A- 9F	R46	B- 6G	R128	B- 9D	R212	B- 5D	R294	B- 9G	C33	B- 4G	C116	B- 8D	TP7	A- 4H	LF1	A- 5H
Q16	A- 8G	R47	A- 5G	R129	B- 2D	R213	B- 5D	R295	B- 11E	C34	B- 6G	C117	B- 11E	TP8	A- 4H		
Q17	A- 7G	R48	B- 4G	R130	B- 8E	R214	B- 5D	R296	B- 11E	C35	A- 6G	C118	B- 10E	TP9	A- 7C	T1	A- 10H
Q18	A- 7G	R49	B- 4G	R131	A- 2E	R215	A- 5D	R297	B- 11F	C36	B- 8C	C119	B- 9E	TP10	A- 12E		
Q19	A- 3F	R50	B- 4G	R132	B- 8E	R216	A- 5D	R298	B- 11E	C38	B- 10F	C120	A- 8F	TP11	A- 7G	TB1	A- 2I
Q20	A- 3F	R51	B- 4H	R133	B- 2D	R217	A- 5C	R299	B- 11F	C39	B- 9F	C121	A- 8F	TP12	A- 7G	TB2	A- 1B
Q21	A- 3E	R52	B- 7C	R134	B- 9D	R218	A- 5C	R300	B- 11F	C40	B- 9F	C122	B- 12B	TP13	A- 7F	TB3	A- 14B
Q22	A- 3E	R53	B- 7C	R135	A- 2E	R219	A- 5C	R301	B- 13D	C41	B- 8G	C123	A- 12B	TP14	A- 1E	TB4	A- 13I
Q23	B- 9F	R54	B- 8C	R136	B- 2D	R220	A- 5C	R302	B- 3C	C42	B- 8G	C124	A- 12F	TP15	A- 2E		
Q24	A- 5E	R55	B- 8C	R137	B- 9D	R221	A- 6C	R303	B- 3C	C43	A- 8G	C125	B- 13D	TP16	A- 2F	DA1	A- 8F
Q25	A- 5D	R56	B- 10G	R138	B- 3D	R222	A- 5C	R304	B- 13F	C44	B- 7G	C126	B- 13D	TP17	A- 2E	DA2	A- 4H
Q26	B- 5D	R57	B- 10G	R140	B- 3D	R223	A- 5C	R305	A- 8H	C45	A- 8G	C127	B- 13C	TP18	A- 3F	DA3	A- 5D
Q27	B- 5D	R58	B- 10F	R141	B- 3D	R224	A- 5C	R306	A- 6H	C46	B- 8F	C128	B- 12D	TP19	A- 3C	DA4	A- 10E
Q28	A- 9C	R59	B- 9F	R142	B- 3D	R225	A- 5C	R307	B- 7G	C47	A- 6F	C129	B- 12C	TP20	A- 4B	DA6	A- 2C
Q29	A- 8C	R60	B- 9G	R143	B- 3D	R226	B- 9D	R308	B- 7G	C48	B- 7F	C130	A- 2G	TP21	A- 3B		
Q30	A- 8E	R61	B- 9F	R144	B- 2C	R227	B- 8D	R309	B- 9F	C49	B- 7F	C131	B- 12D	TP22	A- 3H	X1	A- 13D
Q31	A- 8E	R62	B- 9F	R145	B- 3D	R228	B- 8D	R310	B- 9F	C50	A- 7F	C132	B- 12D	TP23	A- 5F		
Q32	A- 9E	R63	B- 9G	R146	B- 3D	R229	B- 9D	R314	B- 8G	C51	B- 4I	C133	B- 12D	TP24	A- 5E	CN1	A- 10I
Q33	A- 9E	R64	B- 8G	R147	B- 3E	R230	B- 8D	R410	B- 10C	C52	B- 2H	C134	B- 12D	TP25	A- 5C	CN2	A- 7A
Q34	A- 11D	R65	A- 8G	R148	B- 3E	R231	B- 8D	R411	B- 10C	C53	B- 3I	C135	B- 12D	TP26	A- 5C	CN5	A- 5I
Q35	A- 11C	R66	B- 7G	R149	A- 3E	R232	B- 8D	R412	B- 10C	C54	B- 2G	C136	B- 11D	TP27	A- 10E		
Q36	A- 11D	R67	B- 7G	R150	A- 4E	R233	B- 8D	R414	B- 10C	C55	B- 2H	C137	B- 11C	TP28	A- 12H		
Q37	A- 11C	R68	A- 7G	R151	A- 4E	R234	B- 8D	R424	B- 12G	C56	B- 7H	C138	B- 11D	TP29	A- 11E		
Q38	A- 7H	R69	A- 7G	R152	A- 4E	R235	B- 10D	R426	B- 9D	C57	B- 13G	C139	B- 10D	TP30	A- 10F		
Q39	B- 5D	R70	A- 7G	R153	A- 4E	R236	B- 10D	R427	B- 8D	C58	B- 2G	C140	A- 10D	TP31	A- 9B		
Q40	A- 9C	R71	B- 4H	R154	A- 4E	R237	B- 9E	R428	B- 5E	C59	A- 2F	C141	B- 13E	TP32	A- 8B		
Q41	A- 9C	R72	B- 4I	R155	B- 5B	R238	B- 9E	R500	B- 3C	C60	B- 2E	C142	B- 12D	TP33	A- 10C		
Q42	B- 8H	R73	B- 4I	R156	A- 4E	R239	B- 12B	R501	B- 4F	C61	B- 2E	C143	B- 12E	TP34	A- 11D		
Q43	B- 8H	R74	B- 4H	R157	A- 4E	R240	B- 11C	R510	B- 9F	C62	B- 2E	C144	B- 11E	TP35	A- 6I		
Q44	B- 7H	R75	B- 3I	R158	B- 4D	R241	B- 11C	R511	B- 7G	C63	B- 3F	C145	A- 10B	TP36	A- 10B		
Q45	B- 7H	R76	B- 4I	R159	B- 4D	R242	B- 11C	R512	B- 8C	C64	B- 3F	C146	B- 13E	TP37	A- 10B		
Q66	B- 2H	R77	B- 7H	R160	B- 4D	R243	B- 11C	R513	B- 8C	C65	B- 4F	C147	B- 12F	TP38	A- 13H		
Q100	A- 9F	R78	A- 2G	R161	B- 4D	R244	B- 10C	R514	B- 8C	C66	B- 3E	C148	B- 6G	TP39	A- 13G		
		R79	B- 2G	R162	B- 4D	R245	B- 10C	R515	A- 11B	C67	A- 2F	C149	B- 7G	TP40	A- 13H		
D5	A- 2C	R80	B- 2F	R163	B- 3D	R246	B- 10C	R516	B- 9E	C68	B- 2F	C150	A- 9C	TP41	A- 13G		
D7	B- 7G	R81	A- 2G	R164	B- 4C	R247	B- 12B	R517	B- 9E	C69	A- 1F	C151	A- 10C	TP42	A- 2H		
		R82	B- 2G	R165	B- 4D	R248	B- 12B	R518	B- 7G	C70	B- 1F	C152	A- 8D	TP43	A- 4C		
R1	B- 11H	R83	B- 2G	R166	B- 4C	R249	B- 12C			C71	A- 10F	C153	B- 4D	TP44	A- 4C		

4-53

4.28 RF PROCESS-2 SCHEMATIC DIAGRAMS

— DIAGRAM 1/2 —

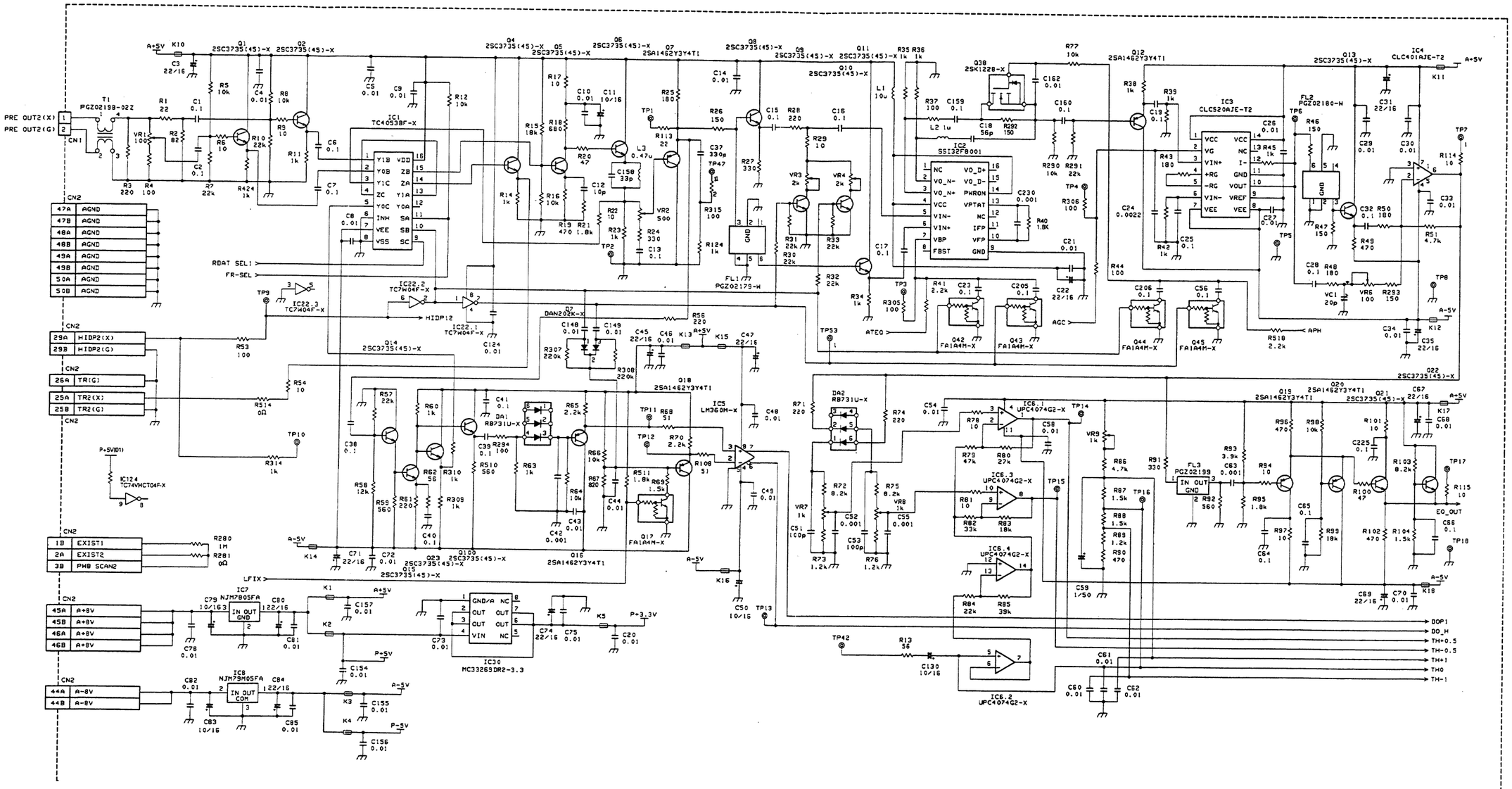

4-54

— DIAGRAM 2/2 —

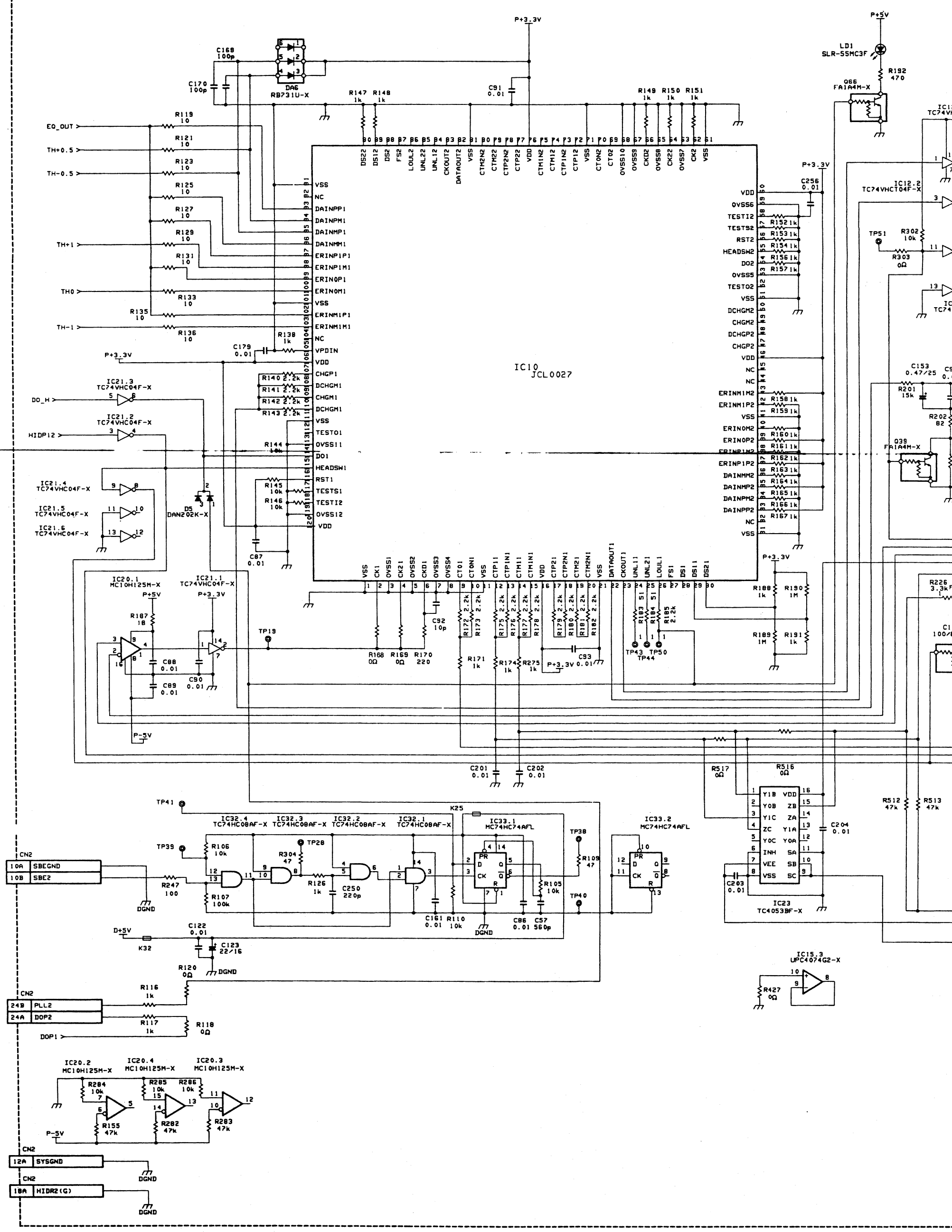
IC10
JCL0027
DA6
RB731U-X
C168 100p
C170 100p
C91 0.01
P+3.3V
P+5V
LD1
SLR-55MC3F
R192 470
Q66
FA1A4M-X
R147 1k
R148 1k
R149 1k
R150 1k
R151 1k
EQ_OUT
TH+0.5
TH-0.5
TH+1
TH0
TH-1
R119 10
R121 10
R123 10
R125 10
R127 10
R129 10
R131 10
R133 10
R135 10
R136 10
R138 1k
C179 0.01
VSS
NC
DAINPP1
DAINPM1
DAINMP1
DAINMM1
ERINP1P1
ERINP1M1
ERIN0P1
ERIN0M1
VSS
ERINM1P1
ERINM1M1
NC
VPDIN
VDD
CHGP1
DCHGM1
CHGM1
DCHGM1
VSS
TESTO1
OVSS11
DO1
HEADSW1
RST1
TESTS1
TESTI2
OVSS12
VDD
R140 2.2k
R141 2.2k
R142 2.2k
R143 2.2k
R144 10k
R145 10k
R146 10k
DS22 DS12 DS2 FS2 LOUL2 UNL22 UNL12 CKOUT2 DATAOUT2 VSS CTM2N2 CTM22 CTP2N2 CTP22 VDD CTM1N2 CTM12 CTP1N2 CTP12 VSS CT0N2 CT02 OVSS10 OVSS9 CKD2 OVSS8 CK22 OVSS7 CK2 VSS
VDD
OVSS6
TESTI2
TESTS2
RST2
HEADSW2
DO2
OVSS5
TESTO2
VSS
DCHGM2
CHGM2
DCHGP2
CHGP2
VDD
NC
NC
ERINM1M2
ERINM1P2
VSS
ERIN0M2
ERIN0P2
ERINP1M2
ERINP1P2
DAINMM2
DAINMP2
DAINPM2
DAINPP2
NC
VSS
R152 1k
R153 1k
R154 1k
R156 1k
R157 1k
R158 1k
R159 1k
R160 1k
R161 1k
R162 1k
R163 1k
R164 1k
R165 1k
R166 1k
R167 1k
C256 0.01
P+3.3V
IC12.2
TC74VHCT04F-X
TP51
R302 10k
R303 0Ω
C153 0.47/25
R201 15k
R202 82
Q39
FA1A4M-X
IC21.3
TC74VHC04F-X
DO_H
IC21.2
TC74VHC04F-X
HIDP12
IC21.4
TC74VHC04F-X
IC21.5
TC74VHC04F-X
IC21.6
TC74VHC04F-X
D5
DAN202K-X
C87 0.01
VSS CK1 OVSS1 CK21 OVSS2 CKD1 OVSS3 OVSS4 CT01 CT0N1 VSS CTP11 CTP1N1 CTM11 CTM1N1 VDD CTP21 CTP2N1 CTM21 CTM2N1 VSS DATAOUT1 CKOUT1 UNL11 UNL21 LOUL1 FS1 DS1 DS11 DS21
R172 2.2k
R173 2.2k
R175 2.2k
R176 2.2k
R177 2.2k
R178 2.2k
R179 2.2k
R180 2.2k
R181 2.2k
R182 2.2k
R183 51
R184 51
R185 2.2k
C92 10p
C93 0.01
P+3.3V
R168 0Ω
R169 0Ω
R170 220
R171 1k
R174 1k
R275 1k
TP43
TP50
TP44
R188 1k
R190 1M
R189 1M
R191 1k
IC20.1
MC10H125M-X
IC21.1
TC74VHC04F-X
R187 18
C88 0.01
C89 0.01
C90 0.01
TP19
P-5V
C201 0.01
C202 0.01
R517 0Ω
R516 0Ω
IC23
TC4053BF-X
C204 0.01
C203 0.01
R512 47k
R513 47k
R226 3.3k
C1 100/
TP41
K25
IC32.4
TC74HC08AF-X
IC32.3
TC74HC08AF-X
IC32.2
TC74HC08AF-X
IC32.1
TC74HC08AF-X
IC33.1
MC74HC74AFL
IC33.2
MC74HC74AFL
TP39
TP28
TP38
TP40
R106 10k
R304 47
R107 100k
R126 1k
C250 220p
C161 0.01
R110 10k
C86 0.01
C57 560p
R109 47
R105 10k
CN2
10A SBEGND
10B SBE2
R247 100
DGND
D+5V
K32
C122 0.01
C123 22/16
R120 0Ω
CN2
24B PLL2
24A DOP2
R116 1k
R117 1k
R118 0Ω
DOP1
IC15.3
UPC4074G2-X
R427 0Ω
IC20.2
MC10H125M-X
IC20.4
MC10H125M-X
IC20.3
MC10H125M-X
R284 10k
R285 10k
R286 10k
R155 47k
R282 47k
R283 47k
P-5V
CN2
12A SYSGND
CN2
18A HIDR2(G)

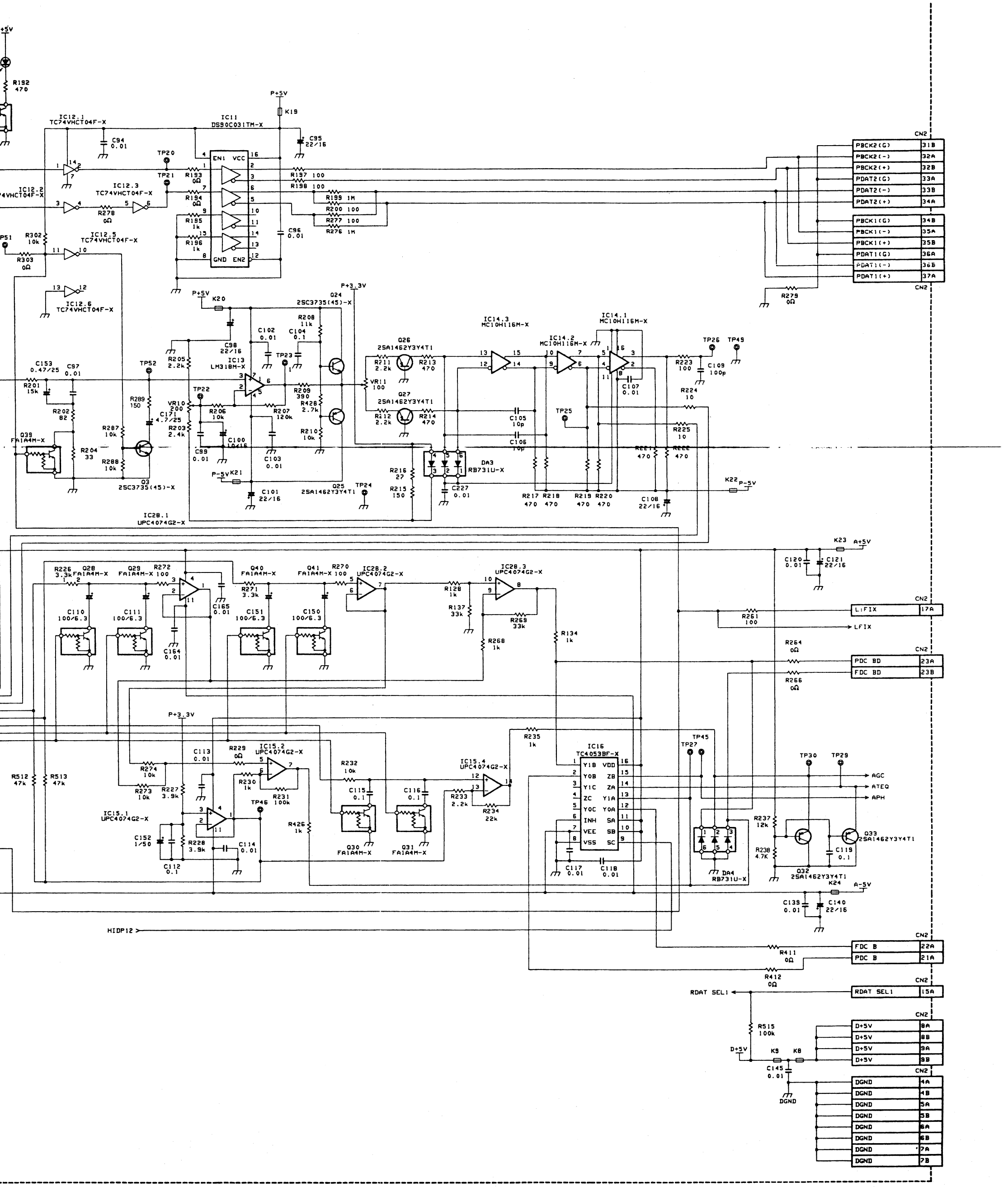
+5V
R192 470
IC12.1 TC74VHCT04F-X
IC11 DS90C031TM-X
P+5V
K19
C94 0.01
C95 22/16
TP20
TP21
R193 0Ω
R194 0Ω
R195 1k
R196 1k
EN1 VCC
GND EN2
R197 100
R198 100
R199 1M
R200 100
R277 100
R276 1M
C96 0.01
IC12.2 TC74VHCT04F-X
IC12.3 TC74VHCT04F-X
R278 0Ω
P51
R302 10k
R303 0Ω
IC12.5 TC74VHCT04F-X
IC12.6 TC74VHCT04F-X
P+3.3V
K20
Q24 2SC3735(45)-X
R208 11k
C102 0.01
C104 0.1
C98 22/16
IC13 LM318M-X
TP23
R205 2.2k
C153 0.47/25
C97 0.01
R201 15k
R202 82
TP52
TP22
R289 150
VR10 200
C171 4.7/25
R206 10k
R207 120k
R203 2.4k
R209 390
R428 2.7k
R210 10k
C100 10/16
C99 0.01
C103 0.01
R287 10k
R288 10k
R204 33
Q39 FA1A4M-X
Q3 2SC3735(45)-X
P-5V
K21
C101 22/16
Q25 2SA1462Y3Y4T1
TP24
IC28.1 UPC4074G2-X
Q26 2SA1462Y3Y4T1
Q27 2SA1462Y3Y4T1
R211 2.2k
R212 2.2k
R213 470
R214 470
VR11 100
IC14.3 MC10H116M-X
IC14.2 MC10H116M-X
IC14.1 MC10H116M-X
TP26
TP49
R223 100
C109 100p
C107 0.01
R224 10
R225 10
TP25
C105 10p
C106 10p
R216 27
R215 150
DA3 RB731U-X
C227 0.01
R217 470
R218 470
R219 470
R220 470
REE1 470
REE2 470
C108 22/16
K22 P-5V
CN2
PBCK2(G) 31B
PBCK2(-) 32A
PBCK2(+) 32B
PDAT2(G) 33A
PDAT2(-) 33B
PDAT2(+) 34A
PBCK1(G) 34B
PBCK1(-) 35A
PBCK1(+) 35B
PDAT1(G) 36A
PDAT1(-) 36B
PDAT1(+) 37A
R279 0Ω
K23 A+5V
C120 0.01
C121 22/16
L:FIX 17A
LFIX
R261 100
R226 3.3k
Q28 FA1A4M-X
Q29 FA1A4M-X
R272 100
Q40 FA1A4M-X
Q41 FA1A4M-X
R270 100
IC28.2 UPC4074G2-X
IC28.3 UPC4074G2-X
R271 3.3k
R128 1k
R137 33k
R269 33k
R268 1k
R134 1k
C110 100/6.3
C111 100/6.3
C151 100/6.3
C150 100/6.3
C165 0.01
C164 0.01
R264 0Ω
R266 0Ω
PDC BD 23A
FDC BD 23B
R235 1k
IC16 TC4053BF-X
TP45
TP27
TP30
TP29
AGC
ATEQ
APH
R237 12k
R238 4.7K
Q33 2SA1462Y3Y4T1
Q32 2SA1462Y3Y4T1
C119 0.1
DA4 RB731U-X
K24 A-5V
C139 0.01
C140 22/16
R512 47k
R513 47k
R274 10k
R273 10k
R227 3.9k
C113 0.01
R229 0Ω
IC15.2 UPC4074G2-X
R230 1k
R231 100k
IC15.1 UPC4074G2-X
TP46
C152 1/50
R228 3.9k
C114 0.01
C112 0.1
R426 1k
R232 10k
C115 0.1
C116 0.1
Q30 FA1A4M-X
Q31 FA1A4M-X
IC15.4 UPC4074G2-X
R233 2.2k
R234 22k
C117 0.01
C118 0.01
HIDP12
R411 0Ω
R412 0Ω
RDAT SEL1
RDAT SEL1 15A
R515 100k
D+5V
K9
K8
C145 0.01
DGND
D+5V 8A
D+5V 8B
D+5V 9A
D+5V 9B
DGND 4A
DGND 4B
DGND 5A
DGND 5B
DGND 6A
DGND 6B
DGND 7A
DGND 7B

4.29 OUT MEM SCHEMATIC DIAGRAMS

— DIAGRAM 1/2 —

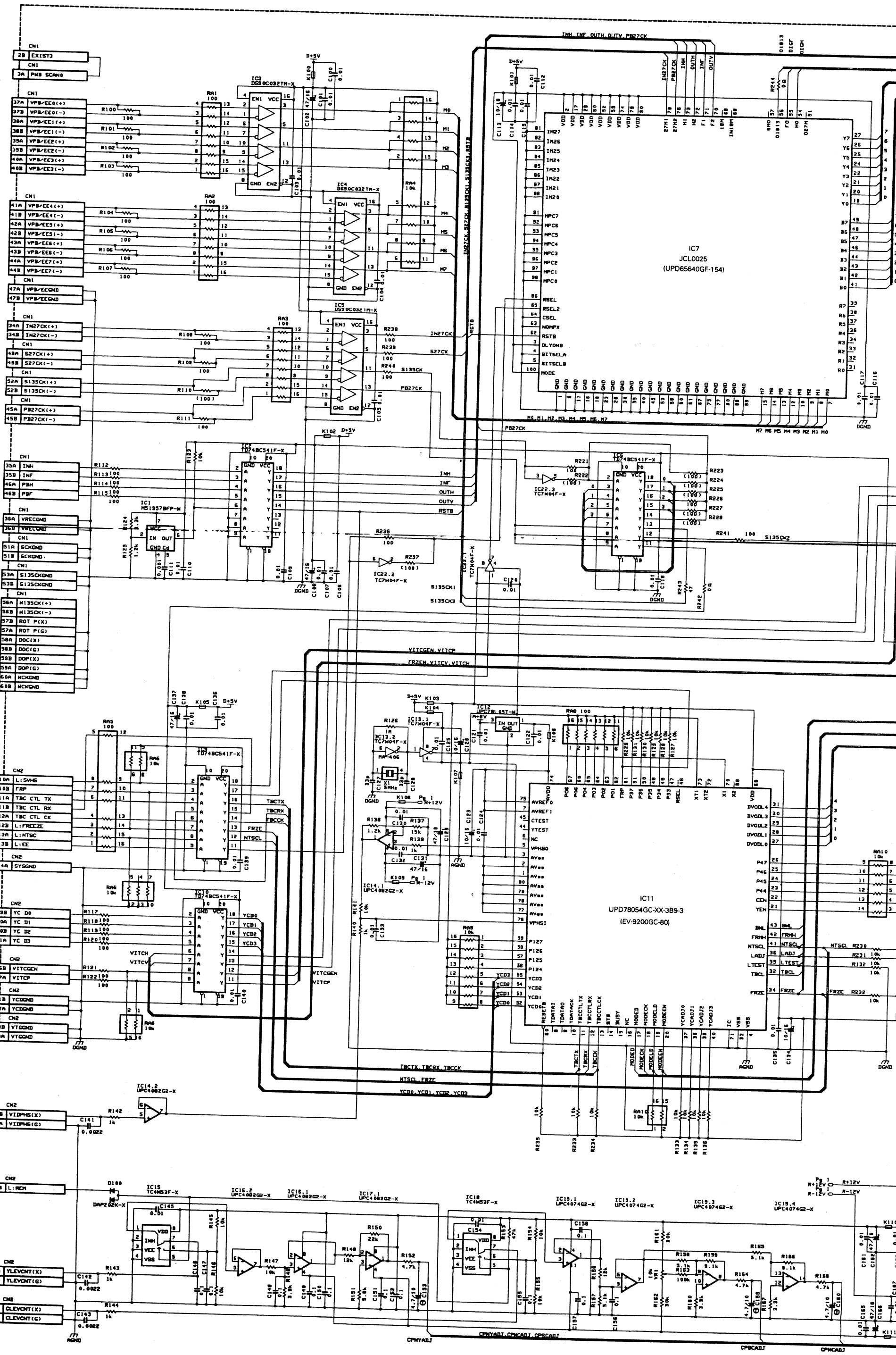

14 OUT MEM

LAST NO.		VACANT NO.
IC	1 - 38	
R	100 - 244	R116
C	100 - 231	C170, C199
Q	1 - 15	
TP	1 - 5	
K	100 - 120	
RA	1 - 16	RA7
VR	1	

— DIAGRAM 2/2 —

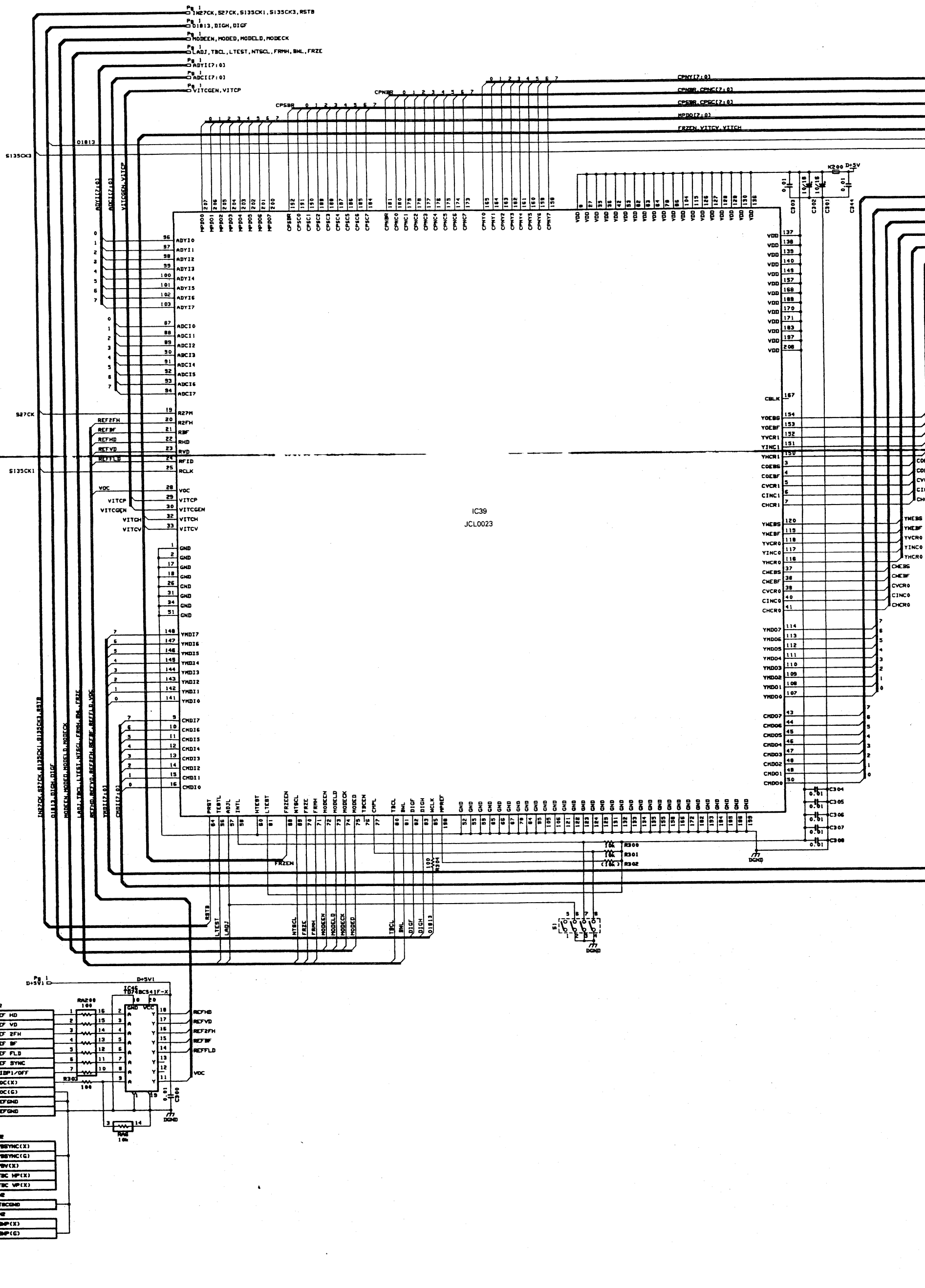
IC39
JCL0023
IN27CK,S27CK,S135CK1,S135CK3,RSTB
D1813,DIGH,DIGF
MODEEN,MODED,MODELD,MODECK
LADJ,TBCL,LTEST,NTSCL,FRMH,BML,FRZE
ADYI[7:0]
ADCI[7:0]
VITCGEN,VITCP
CPNY[7:0]
CPNBR,CPNC[7:0]
CPSBR,CPSC[7:0]
MPD0[7:0]
FRZEN,VITCV,VITCH
S135CK3
S27CK
S135CK1
YMDI[7:0]
CMDI[7:0]
YMDO[7:0]
CMDO[7:0]
FRZEN
RSTB
LTEST
LADJ
NTSCL
FRZE
FRMH
MODEEN
MODELD
MODECK
MODED
TBCL
BML
DIGF
DIGH
D1813
DGND
D+5V
D+5V1
IC46
TD74BC541F-X
RA200
100
R303
100
RA6
10k
REFHD
REFVD
REF2FH
REFBF
REFFLD
VOC
CN2
1A REF HD
1B REF VD
2A REF 2FH
2B REF BF
3A REF FLD
3B REF SYNC
4A HIDP1/OFF
5A VOC(X)
5B VOC(G)
4B REFGND
5A REFGND
33A PBSYNC(X)
33B PBSYNC(G)
34A PBV(X)
34B TBC VP(X)
35A TBC VP(X)
35B TBCGND
36A BMP(X)
36B BMP(G)
K200
R300
R301
(10k) R302
S1

14 OUT MEM

LAST NO.		VACANT NO.
IC	39 - 46	
R	300 - 304	
C	300 - 344	
Q		
TP	6 - 9	
K	200 - 206	
RA	200 - 202	

4.30 OUT MEM CIRCUIT BOARDS

— SIDE A —

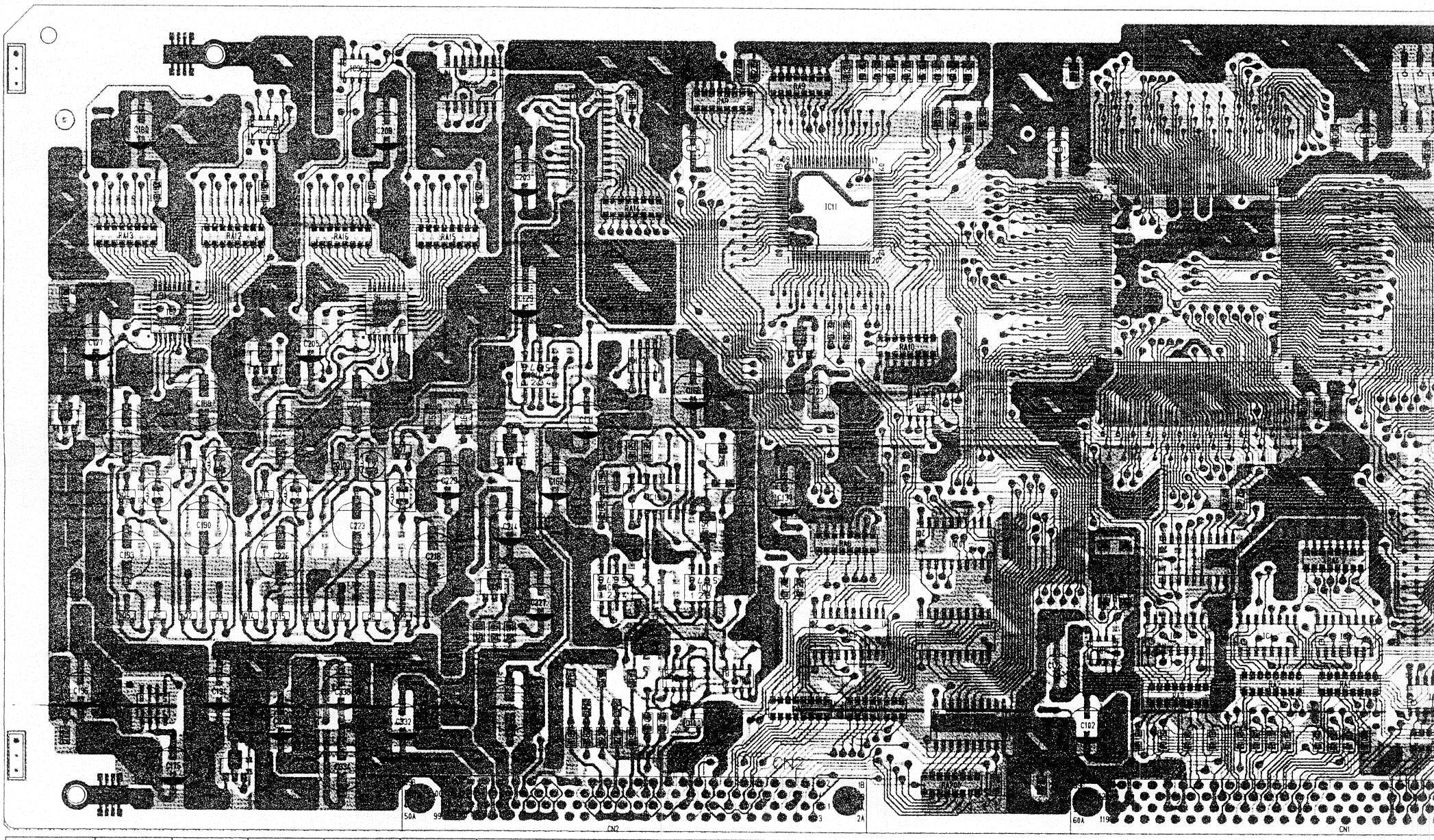

24 23 22 21 20 19 18 17 16 15 14 13 12 11 10 9 8 7

— SIDE B —

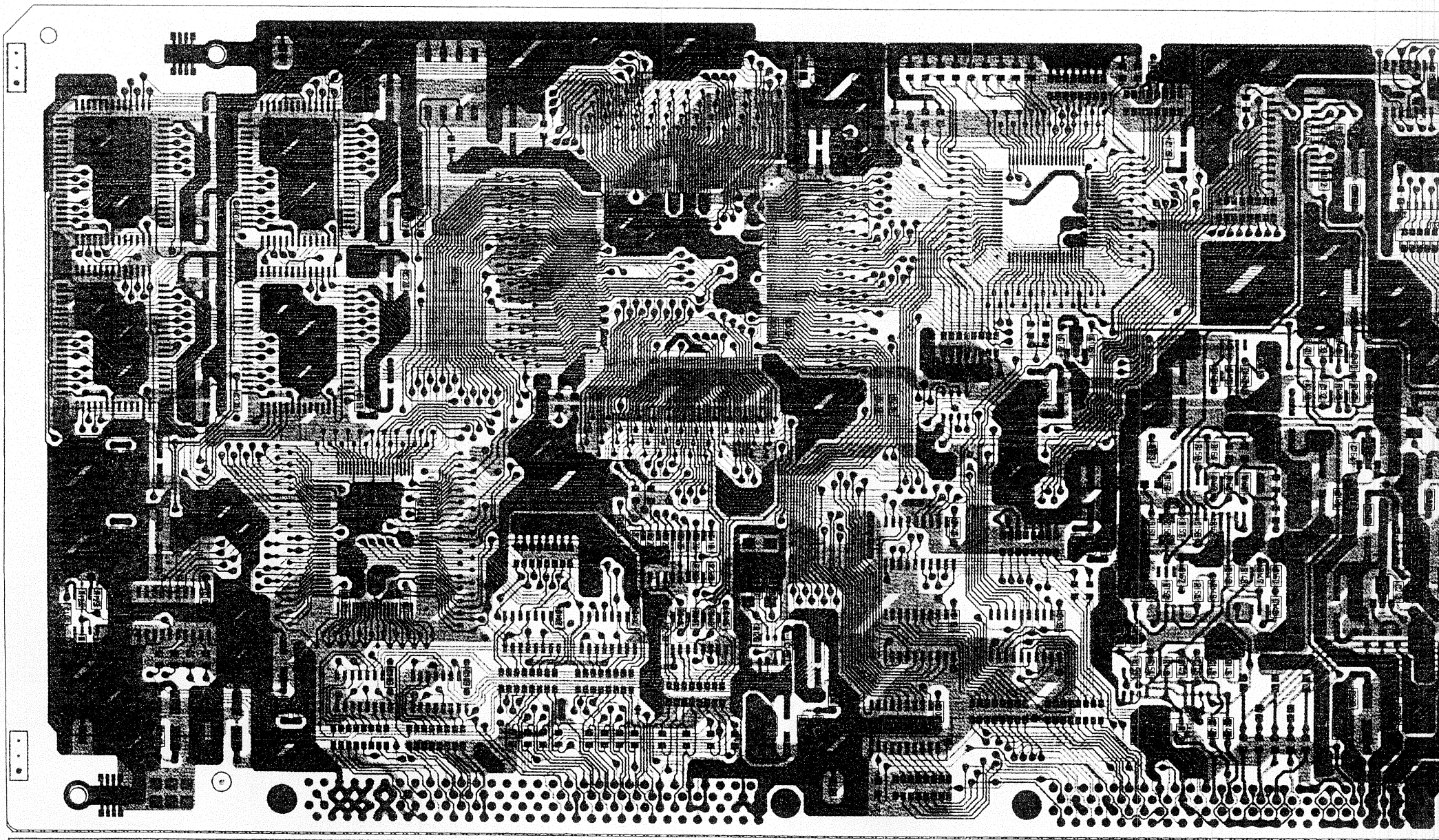

1 2 3 4 5 6 7 8 9 10 11 12 13 14 15 16 17 18

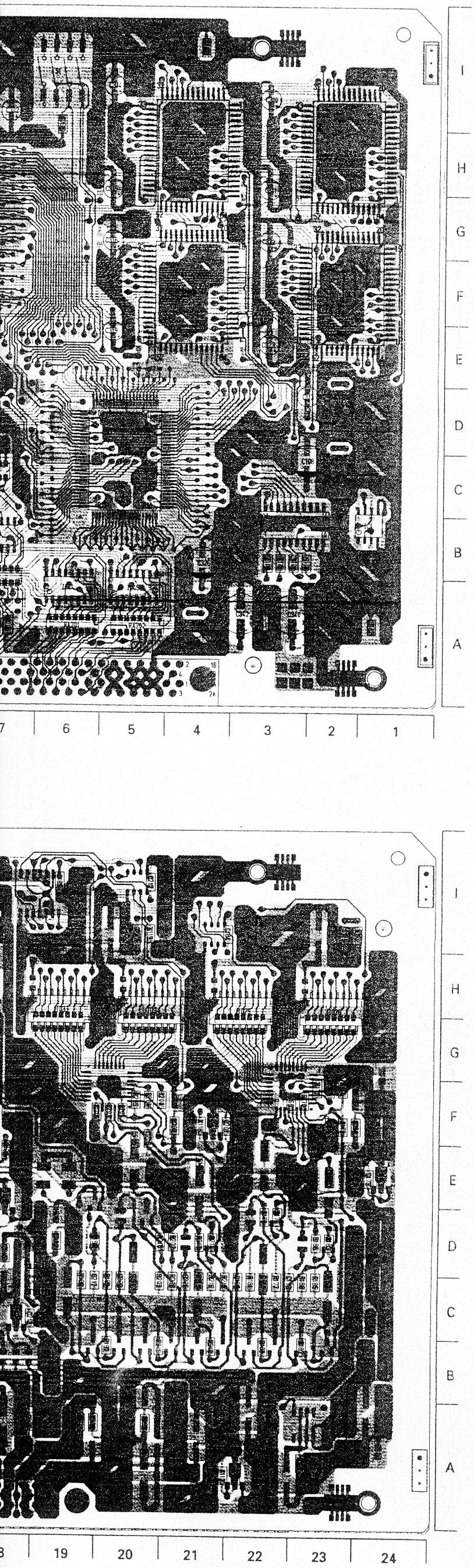

ADDRESS TABLE OF BOARD PARTS

Side — A-1C (Y axis / X axis)

Each address may have an address error by one interval.

IC1	A- 2C	R118	B- 15A	R200	B- 20F	C129	A- 18G	C214	A- 18D	K100	B- 11A				
IC2	A- 3C	R119	B- 16A	R201	B- 20F	C130	B- 18F	C215	B- 18D	K101	B- 2E				
IC3	A- 8B	R120	B- 16A	R202	B- 21F	C131	A- 17E	C216	B- 17I	K102	B- 2D				
IC4	A- 9B	R121	A- 14C	R203	B- 20F	C132	B- 17F	C217	B- 19D	K103	B- 15I				
IC5	A- 10B	R122	A- 15C	R204	B- 20F	C133	B- 17F	C218	A- 19C	K104	B- 11B				
IC6	A- 10C	R123	B- 2C	R205	B- 20F	C134	A- 16I	C219	B- 19F	K105	B- 15D				
IC7	A- 5D	R124	B- 2C	R206	B- 20F	C135	B- 16I	C220	B- 21F	K106	B- 15F				
~~IC8~~	~~A- 13B~~	~~R125~~	~~B- 2B~~	~~R207~~	B- 21D	C136	~~B- 16D~~	C221	A- 20E	~~K107~~	~~B- 15H~~				
IC9	A- 14B	R126	B- 10B	R208	B- 21D	C137	A- 15D	C222	B- 20D	K108	B- 18F				
IC10	A- 13D	R127	A- 13I	R209	B- 20D	C138	B- 14D	C223	A- 20D	K109	B- 17F				
IC11	A- 14H	R128	A- 13I	R210	B- 20D	C139	B- 14C	C224	A- 21E	K110	B- 18D				
IC12	A- 14F	R129	A- 13I	R211	B- 20C	C140	B- 13D	C225	B- 21D	K111	B- 16F				
IC13	A- 10B	R130	A- 14I	R212	B- 20D	C141	B- 18A	C226	A- 21C	K112	B- 21A				
IC14	A- 18F	R131	A- 14I	R213	A- 17A	C142	B- 16A	C227	A- 18C	K113	B- 24E				
IC15	A- 16B	R132	A- 12I	R214	B- 21D	C143	B- 16A	C228	B- 18C	K114	B- 23I				
IC16	A- 17C	R133	A- 13I	R215	B- 21D	C145	B- 16B	C229	A- 19D	K115	B- 23A				
IC17	A- 16C	R134	A- 12I	R216	B- 21D	C146	B- 16B	C230	B- 19D	K116	A- 18B				
IC18	A- 15B	R135	A- 12I	R217	B- 21D	C147	B- 16B	C231	B- 17I	K117	B- 21E				
IC19	A- 16D	R136	A- 13I	R218	B- 21C	C148	B- 16C	C300	B- 13A	K118	B- 21F				
IC20	A- 18E	R137	B- 18F	R219	B- 21D	C149	B- 17C	C301	A- 11I	K119	B- 20I				
IC21	A- 16F	R138	B- 18F	R220	A- 17A	C150	B- 17C	C302	A- 7I	K120	B- 19C				
IC22	A- 13E	R139	B- 18F	R221	B- 9C	C151	B- 15C	C303	B- 11I	K200	B- 11I				
IC23	A- 24E	R140	B- 18F	R222	B- 10C	C152	B- 16C	C304	B- 9H	K201	B- 3H				
IC24	A- 22A	R141	B- 17F	R223	B- 9C	C153	A- 16D	C305	A- 7I	K202	B- 6H				
IC25	B- 21H	R142	B- 17A	R224	B- 9D	C154	B- 15B	C306	A- 8E	K203	B- 5E				
IC26	B- 23H	R143	A- 16A	R225	B- 9D	C155	B- 15B	C307	B- 10F	K204	B- 3E				
IC27	A- 22G	R144	A- 16A	R226	B- 9D	C156	B- 16D	C308	B- 10G	K205	B- 4A				
IC28	A- 19I	R145	B- 16B	R227	B- 9D	C157	B- 16D	C309	B- 4H	K206	B- 19A				
IC29	A- 21I	R146	B- 16B	R228	B- 9D	C158	B- 16D	C310	A- 3I						
IC30	A- 18C	R147	B- 17C	R229	A- 15I	C159	A- 19E	C311	A- 3H	RA1	A- 7B				
IC31	A- 21F	R148	B- 16C	R230	A- 13I	C160	A- 19E	C312	B- 3I	RA2	A- 8B				
IC32	A- 17H	R149	B- 16C	R231	A- 12I	C161	B- 18D	C313	B- 6H	RA3	A- 9B				
IC33	B- 18H	R150	B- 16C	R232	A- 12I	C162	A- 17D	C314	A- 5I	RA4	A- 7C				
IC34	B- 20H	R151	B- 15C	R233	A- 14F	C163	B- 18E	C315	A- 5H	RA5	A- 14A				
IC35	A- 20G	R152	B- 16C	R234	A- 14F	C164	B- 18E	C316	B- 5I	RA6	A- 14D				
IC36	A- 20I	R153	B- 15B	R235	A- 15I	C165	B- 16F	C317	B- 5E	RA8	A- 15I				
IC37	A- 23A	R154	B- 15B	R236	B- 12E	C166	A- 16F	C318	A- 5G	RA9	A- 14I				
IC38	B- 18D	R155	B- 15B	R237	B- 12E	C167	B- 16F	C319	A- 5F	RA10	A- 13F				
IC39	A- 9G	R156	B- 16D	R238	B- 9B	C168	B- 17F	C320	B- 6G	RA11	A- 13A				
IC40	A- 2H	R157	B- 16D	R239	B- 10C	C169	B- 21A	C321	B- 4E	RA12	A- 22G				
IC41	A- 4H	R158	A- 16E	R240	B- 9C	C171	B- 22A	C322	A- 3G	RA13	A- 23G				
IC42	A- 4F	R159	B- 16E	R241	A- 9D	C172	B- 23E	C323	A- 3E	RA14	A- 16H				
IC43	A- 2F	R160	B- 16D	R242	B- 8D	C173	B- 24E	C324	B- 3G	RA15	A- 19G				
IC44	A- 6B	R161	B- 15D	R243	A- 9D	C174	B- 22A	C325	B- 4A	RA16	A- 20G				
IC45	A- 5B	R162	B- 16D	R244	B- 6D	C175	A- 22A	C326	A- 4B	RA200	A- 12A				
IC46	A- 13A	R163	B- 15E	R300	A- 6I	C176	B- 23A	C327	B- 4A	RA201	A- 6A				
		R164	B- 16E	R301	A- 8E	C177	A- 23F	C328	B- 5B	RA202	A- 5A				
Q1	A- 22E	R165	A- 16E	R302	B- 11F	C178	B- 23F	C329	B- 6B						
Q2	A- 22C	R166	A- 17D	R303	A- 12A	C179	B- 23I	C330	A- 21A	S1	A- 6I				
Q3	A- 22C	R167	B- 16D	R304	B- 6G	C180	A- 23I	C331	B- 21B						
Q4	A- 23D	R168	A- 17D			C181	B- 23I	C332	A- 19A	TB1	A- 22I				
Q5	A- 23C	R169	B- 22F	VR1	A- 15E	C182	A- 21H	C333	B- 19A	TB2	A- 24A				
Q6	A- 23C	R170	B- 23F			C183	A- 23H	C334	A- 20A	TB3	A- 1A				
Q7	A- 19E	R171	B- 23G	C100	B- 11A	C184	B- 21I	C335	B- 18A	TB4	A- 3I				
Q8	A- 20C	R172	B- 22F	C101	B- 10A	C185	B- 19I	C336	A- 18A						
Q9	A- 19C	R173	B- 23E	C102	A- 11A	C186	B- 23F	C337	B- 18B	CN1	A- 7A				
Q10	A- 20E	R174	B- 23G	C103	B- 8C	C187	B- 23G	C338	A- 20B	CN2	A- 16A				
Q11	A- 21C	R175	B- 23F	C104	B- 9C	C188	A- 22E	C339	B- 20A						
Q12	A- 20C	R176	B- 22E	C105	B- 10C	C189	B- 22D	C340	A- 3A	X1	A- 10C				
Q13	A- 21D	R177	B- 22D	C106	B- 2D	C190	A- 22D	C341	B- 3A						
Q14	A- 21C	R178	B- 22D	C107	B- 2D	C191	A- 23E	C342	A- 4A						
Q15	A- 21C	R179	B- 22E	C108	A- 3D	C192	B- 22D	C343	B- 4A						
		R180	B- 22C	C109	B- 3C	C193	A- 23C	C344	B- 11I						
D100	A- 16A	R181	B- 22D	C110	B- 2C	C194	A- 22B								
		R182	A- 17A	C111	B- 1C	C195	B- 22A	L1	A- 19D						
R100	A- 7A	R183	B- 23D	C112	B- 2E	C196	A- 24B	L2	A- 20E						
R101	A- 7A	R184	B- 23D	C113	A- 3E	C197	B- 23A	L3	A- 21D						
R102	A- 7A	R185	B- 23D	C114	B- 2E	C198	A- 18B	L4	A- 22E						
R103	A- 8A	R186	B- 23D	C115	B- 6C	C200	A- 18B	L5	A- 23D						
R104	A- 8A	R187	B- 23C	C116	B- 6D	C201	B- 21F								
R105	A- 8A	R188	B- 23D	C117	B- 5C	C202	B- 21F	TP1	A- 16B						
R106	A- 8A	R189	A- 17A	C118	B- 10D	C203	A- 18H	TP2	A- 17A						
R107	A- 9A	R190	A- 16I	C119	B- 13C	C204	B- 18H	TP3	A- 17B						
R108	A- 10A	R191	B- 18I	C120	B- 12F	C205	A- 21F	TP4	A- 17A						
R109	A- 9A	R192	B- 17H	C121	B- 14F	C206	B- 20F	TP5	A- 17B						
R110	A- 9A	R193	B- 18I	C122	B- 14F	C207	B- 20I	TP6	A- 24G						
R111	A- 10A	R194	B- 17I	C123	A- 14F	C208	A- 20I	TP7	A- 24A						
R112	A- 3B	R195	B- 20D	C124	B- 14F	C209	B- 20I	TP8	A- 11A						
R113	A- 3B	R196	B- 19D	C125	B- 11B	C210	A- 18H	TP9	A- 2A						
R114	A- 3B	R197	B- 20C	C126	A- 11B	C211	A- 20H	TP10	A- 4I						
R115	A- 3B	R198	B- 19D	C127	B- 10C	C212	B- 20I	TP11	A- 11I						
R117	B- 15A	R199	A- 16A	C128	B- 10C	C213	B- 18C								

4.31 ANA IN SCHEMATIC DIAGRAMS (D85/D80)

— DIAGRAM 1/3 —

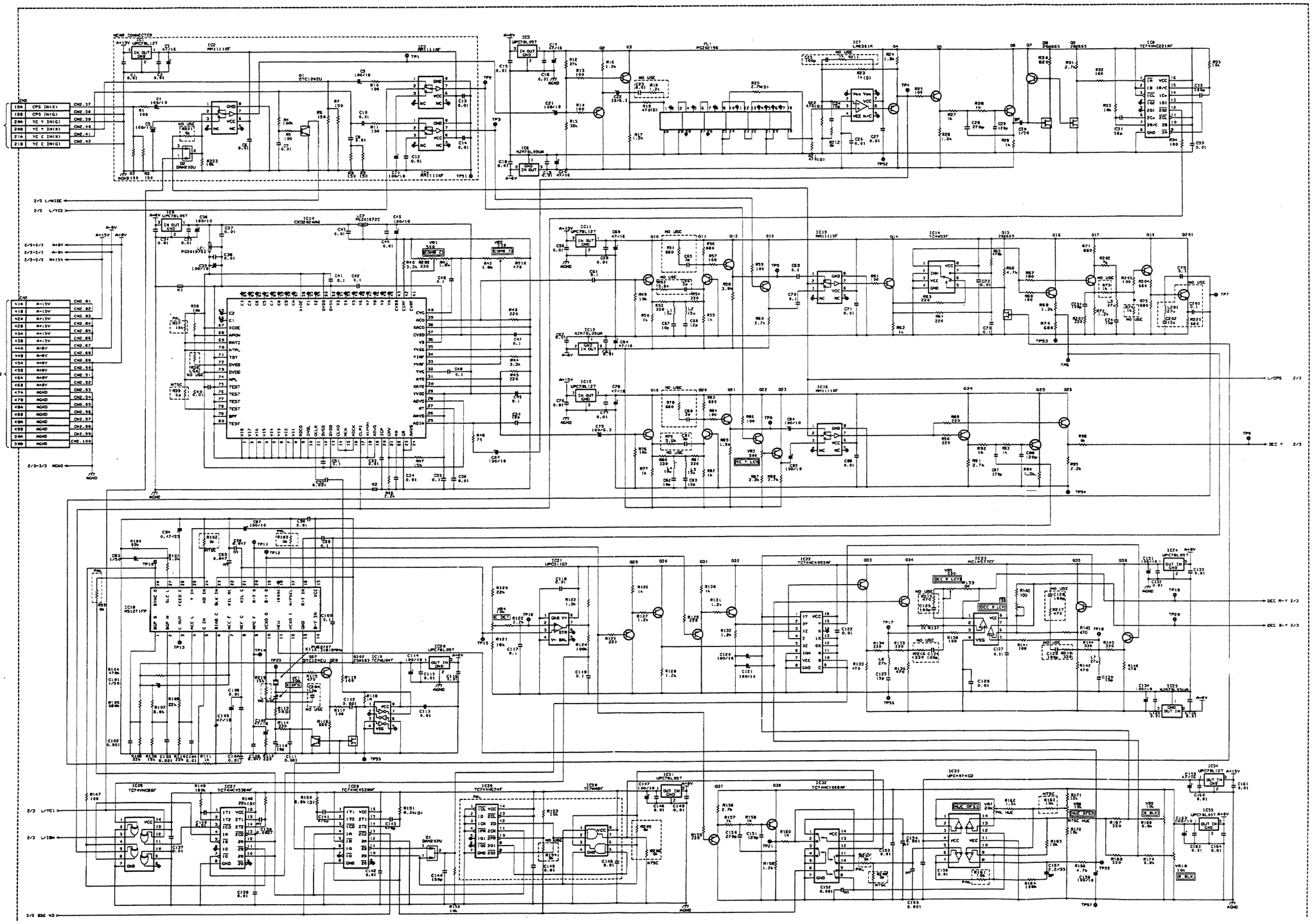

4-59

— DIAGRAM 2/3 —

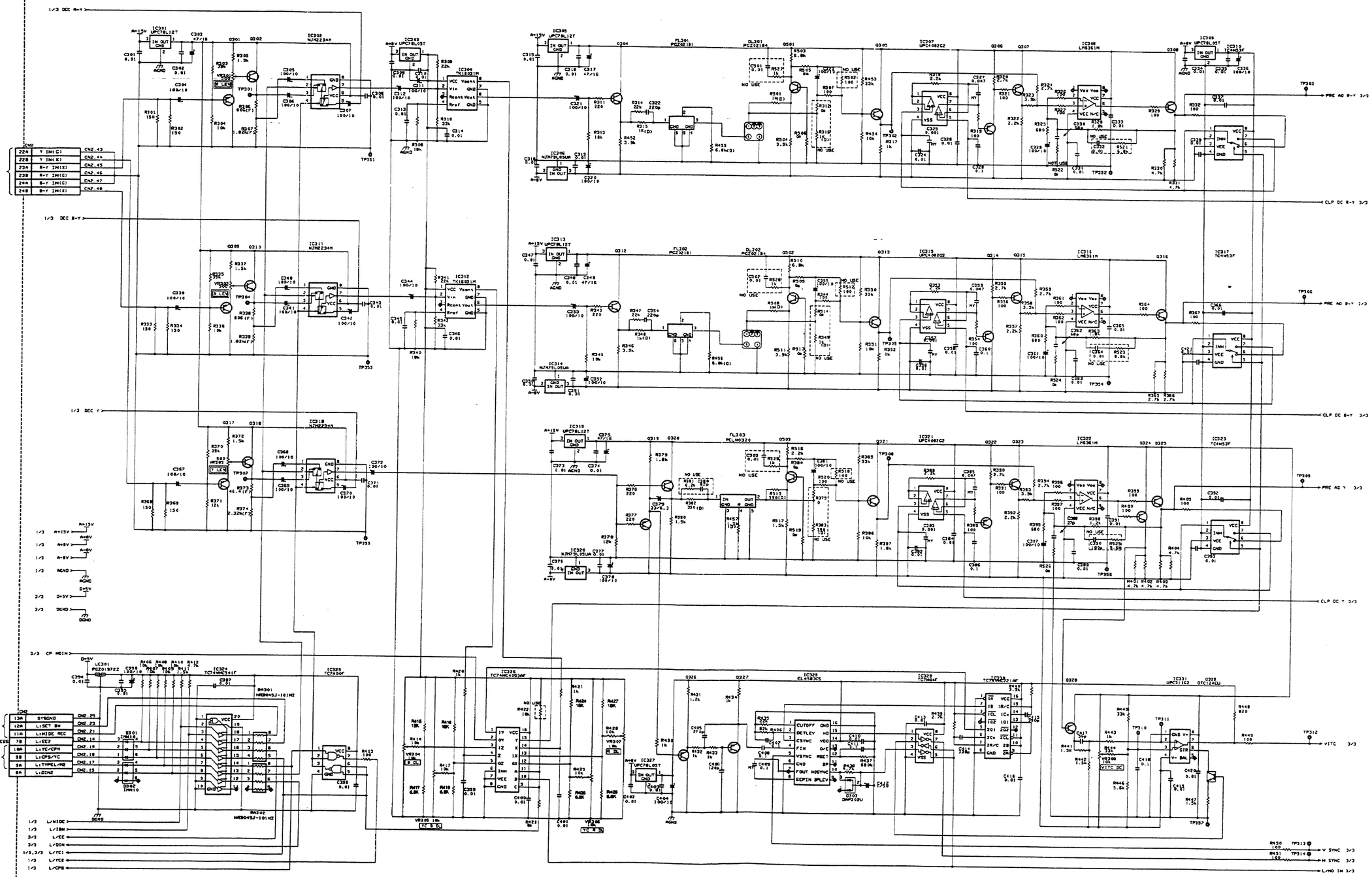

4-60

— DIAGRAM 3/3 —

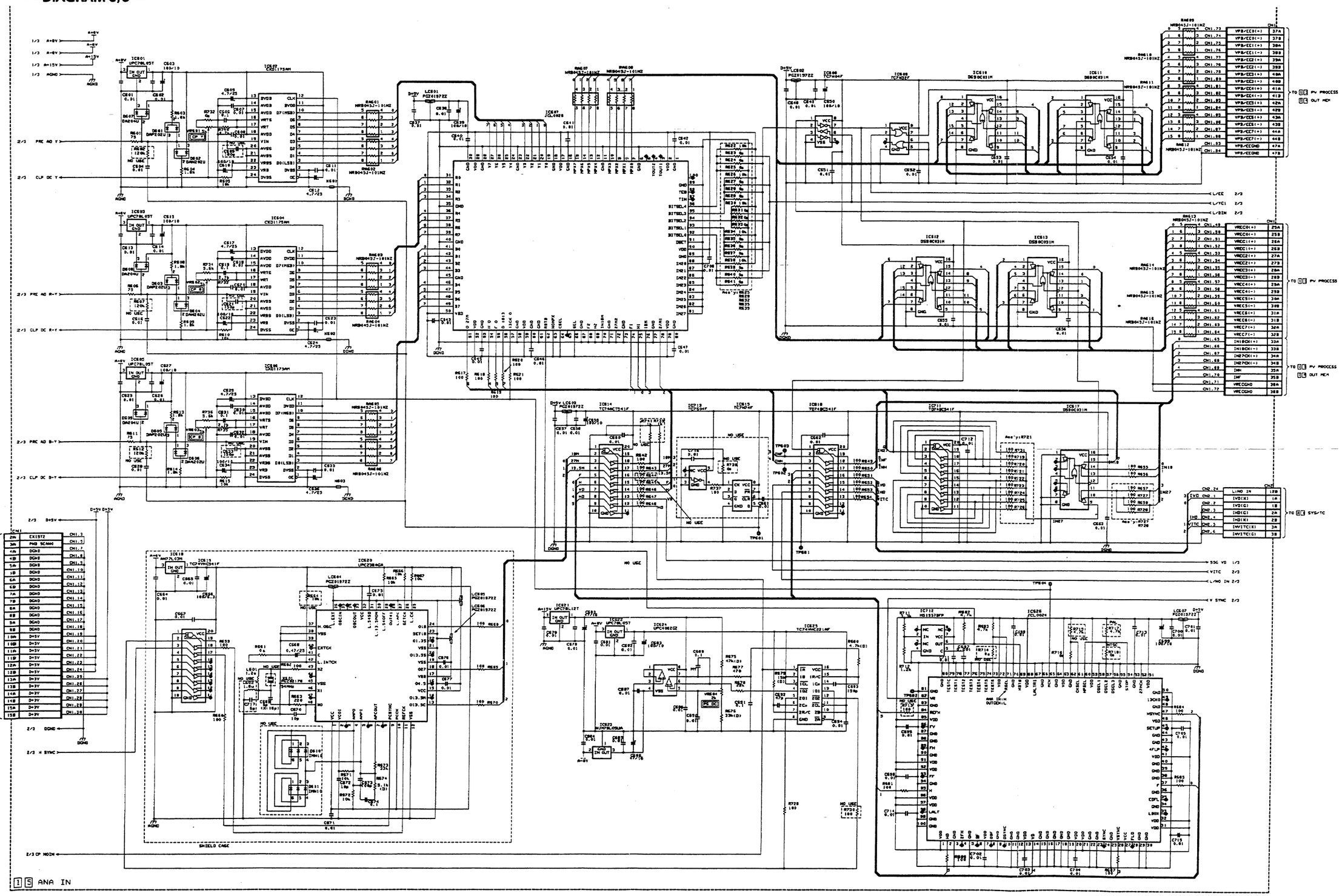
A+8V
A+5V
A+15V
AGND
2/3 PRC AD Y
2/3 CLP DC Y
2/3 PRC AD R-Y
2/3 CLP DC R-Y
2/3 PRC AD B-Y
2/3 CLP DC B-Y
D+5V D+3V
DGND
SCNG
2/3 D+5V
2/3 DGND
2/3 H SYNC
2/3 CP MOIN
FROM MOTHER2
SHIELD CASE
TO PV PROCESS
TO OUT MEM
TO SYS-TC
L/EE 2/3
L/YC1 2/3
L/B2M 2/3
SSC VD 1/3
V/TC 2/3
L/MO IN 2/3
V SYNC 2/3
NO USE
1 5 ANA IN

4.32 ANA IN CIRCUIT BOARDS

— SIDE A —

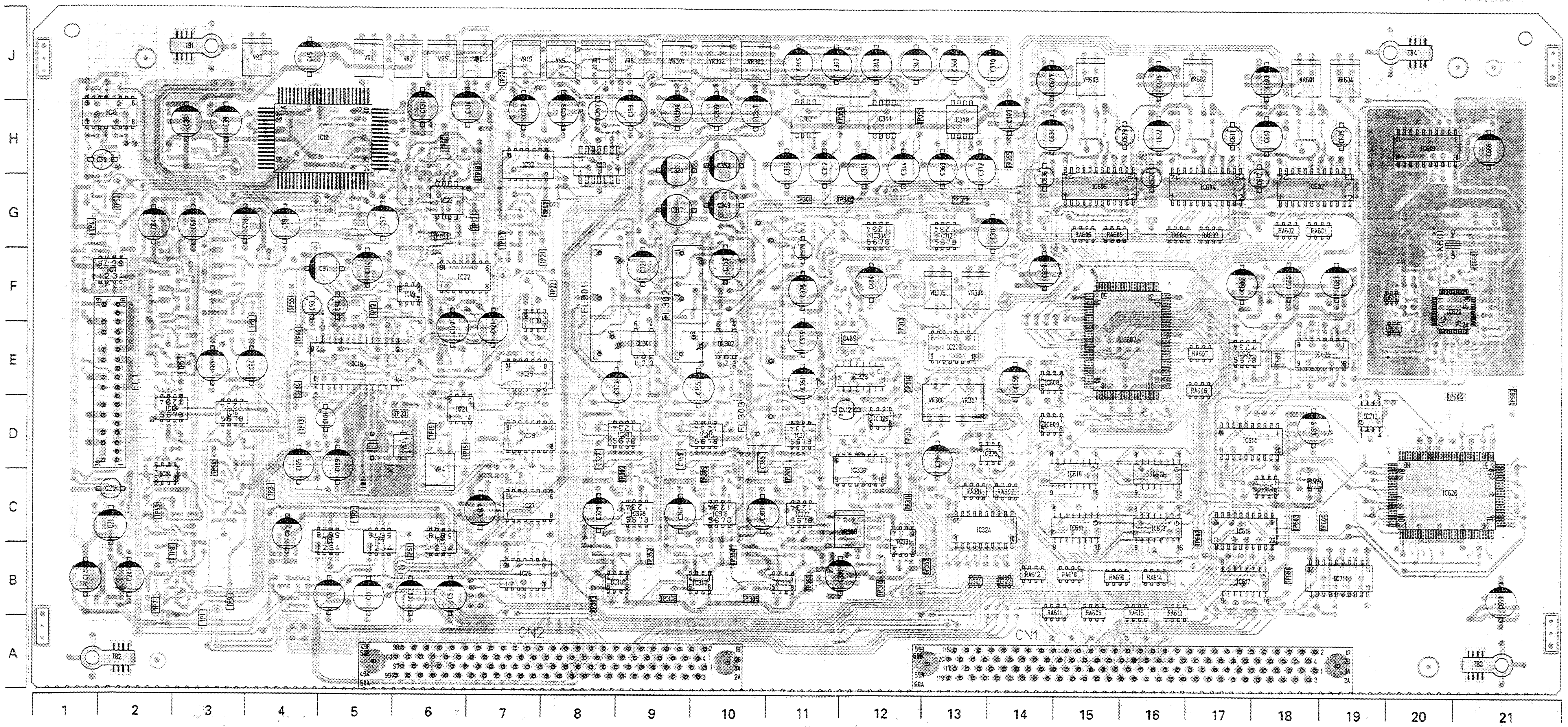

● ADDRESS TABLE OF BOARD PARTS

Each address may have an address error by one interval.

A-1C: Side — A; X axis — 1; Y axis — C

IC1	B-4C	IC30	A-7F	IC323	A-11C	IC620	A-20F	Q18	B-2C	Q307	B-9D
IC2	A-6C	IC31	B-7D	IC324	A-13C	IC621	B-18F	Q19	B-3F	Q308	B-8C
IC3	A-5C	IC32	A-7H	IC325	A-14D	IC622	B-18F	Q20	B-3F	Q309	B-10H
IC4	A-4C	IC33	A-8H	IC326	A-13F	IC623	B-17F	Q21	B-3E	Q310	B-12H
IC5	B-1C	IC34	B-8H	IC327	B-12F	IC624	A-17E	Q22	B-3J	Q312	B-10G
IC6	B-2C	IC35	B-7H	IC328	A-12E	IC625	A-18E	Q23	B-3E	Q313	B-10E
IC7	A-1F	IC301	B-14H	IC329	A-12E	IC626	A-20D	Q24	B-3D	Q314	B-9D
IC8	A-1H	IC302	A-11H	IC330	A-12D	IC711	A-18C	Q25	B-3D	Q315	B-10D
IC9	B-3H	IC303	B-14G	IC331	A-12C	IC712	A-19E	Q26	B-3D	Q316	B-10C
IC10	A-4H	IC304	A-12G	IC601	B-17J	IC713	A-18D	Q27	B-6E	Q317	B-10H
IC11	B-3G	IC305	B-9G	IC602	A-18G			Q28	B-6F	Q318	B-13H
IC12	B-2G	IC306	B-9H	IC603	B-16J	Q1	B-4C	Q29	B-6E	Q319	B-11G
IC13	A-2E	IC307	A-9E	IC604	A-16G	Q2	B-2D	Q30	B-6F	Q320	B-11G
IC14	A-2D	IC308	A-9D	IC605	B-14J	Q3	B-1D	Q31	B-6F	Q321	B-11E
IC15	B-3G	IC309	B-12C	IC606	A-15G	Q4	B-2G	Q32	B-6F	Q322	B-10D
IC16	A-3E	IC310	A-8C	IC607	A-15F	Q5	B-1G	Q33	B-6G	Q323	B-11D
IC18	A-4E	IC311	A-12H	IC608	A-14E	Q6	B-1G	Q34	B-6G	Q324	B-12C
IC19	A-6F	IC312	A-13G	IC609	A-14E	Q7	B-2H	Q35	B-6H	Q325	B-11C
IC20	B-5F	IC313	B-10G	IC610	A-15D	Q8	B-1H	Q36	B-6G	Q326	B-12F
IC21	A-6E	IC314	B-10H	IC611	A-15C	Q9	B-1H	Q37	B-7G	Q327	B-12F
IC22	A-6F	IC315	A-10E	IC612	A-16D	Q10	B-3F	Q38	B-7G	Q328	B-12C
IC23	A-6G	IC316	A-10D	IC613	A-16C	Q11	B-2F	Q201	B-3C	Q329	B-12C
IC24	B-6H	IC317	A-10C	IC614	A-18D	Q12	B-2E	Q202	B-5F	Q501	B-9F
IC25	B-6H	IC318	A-13H	IC615	A-17D	Q13	B-2E	Q301	B-9H	Q502	B-10F
IC26	A-7C	IC319	B-11F	IC616	A-18C	Q14	B-2D	Q302	B-11H	Q503	B-10F
IC27	A-7D	IC320	B-11F	IC617	A-17C	Q15	B-2D	Q304	B-9F		
IC28	A-7D	IC321	A-11E	IC618	B-20H	Q16	B-3D	Q305	B-9E	D1	B-7E
IC29	A-7E	IC322	A-11D	IC619	A-20H	Q17	B-2C	Q306	B-8D	D2	B-8C

D301	A-13C	R14	B-2D	R42	B-5J	R70	B-2D	R100	B-4F	R128	B-6F
D302	A-14C	R15	B-2C	R43	B-5H	R71	B-3C	R101	B-4F	R129	B-6F
D303	B-11E	R16	B-1C	R44	B-6H	R72	B-2C	R102	B-5F	R130	B-6F
D601	B-18H	R17	B-2D	R45	B-5H	R73	B-3C	R103	B-5F	R131	B-6F
D602	B-18H	R18	B-1D	R46	B-5G	R74	B-2C	R104	B-4E	R132	B-6F
D603	B-16H	R19	B-1D	R47	B-5G	R75	B-2C	R105	B-4E	R133	B-6G
D604	B-17H	R20	B-1E	R48	B-5G	R76	B-4F	R106	B-4E	R134	B-6G
D605	B-15H	R21	B-1F	R49	B-2G	R77	B-3G	R107	B-4E	R135	B-6G
D606	B-15H	R22	B-1F	R50	B-2F	R78	B-3F	R108	B-4E	R136	B-6G
D607	B-17H	R23	B-1G	R51	B-3F	R79	B-3F	R109	B-5E	R137	B-6G
D608	B-16H	R24	B-1G	R52	B-3F	R80	B-3F	R110	B-5E	R138	B-6G
D609	B-14H	R25	B-1G	R53	B-2F	R81	B-3F	R111	B-4D	R139	B-6J
D610	A-19F	R26	B-2G	R54	B-2F	R82	B-3F	R112	B-5D	R140	B-7J
D611	A-19F	R27	B-1G	R55	B-2F	R83	B-3F	R113	B-6D	R141	B-6G
		R28	B-1G	R56	B-2E	R84	B-3F	R114	B-6E	R142	B-6H
R1	B-6B	R29	B-2G	R57	B-3E	R85	B-3F	R115	B-5E	R143	B-6H
R2	B-6B	R30	B-1H	R58	B-2E	R86	B-3J	R116	B-6F	R144	B-6H
R3	B-6B	R31	B-1H	R59	B-2E	R87	B-4J	R117	B-6F	R145	B-6G
R4	B-4C	R32	B-1H	R60	B-2E	R88	B-3E	R118	B-5F	R146	B-6H
R5	B-4C	R33	B-2H	R61	B-2D	R89	B-3D	R119	B-5F	R147	B-7C
R6	B-5B	R34	B-2H	R62	B-2D	R90	B-3D	R120	B-6E	R148	B-7D
R7	B-4B	R35	B-1H	R63	B-2D	R91	B-3D	R121	B-6D	R149	B-7C
R8	B-4B	R36	B-4H	R64	B-2D	R92	B-3D	R122	B-6D	R150	B-7D
R9	B-4B	R37	B-3H	R65	B-2D	R93	B-3D	R123	B-6E	R151	B-7E
R10	B-5C	R38	B-4H	R66	B-2D	R94	B-3C	R124	B-6E	R152	B-7E
R11	B-4C	R39	B-3H	R67	B-2D	R95	B-3C	R125	B-7E	R153	B-7E
R12	B-1C	R40	B-5H	R68	B-3D	R96	B-3C	R126	B-6E	R154	B-7E
R13	B-1D	R41	B-5J	R69	B-2D	R99	B-5E	R127	B-6E	R155	B-7G

R156	B-7G	R212	B-2F	R320	B-9D	R348	B-10G	R376	B-11G
R157	B-7G	R215	B-6G	R321	B-9D	R349	B-10E	R377	B-11G
R158	B-7G	R216	B-6G	R322	B-8D	R350	B-10E	R378	B-12G
R159	B-7G	R217	B-6G	R323	B-8D	R351	B-10E	R379	B-11G
R160	B-7G	R218	B-6H	R324	B-9D	R352	B-9E	R380	B-11G
R161	B-8H	R219	B-5E	R325	B-8D	R353	B-10E	R381	B-11G
R162	B-8J	R220	B-2C	R326	B-9D	R354	B-9D	R382	B-11G
R163	B-9J	R221	B-6C	R327	B-9D	R355	B-10D	R383	B-10D
R164	B-8H	R222	B-6C	R328	B-8C	R356	B-10D	R384	B-11E
R165	B-8J	R301	B-9H	R329	B-9C	R357	B-10D	R385	B-11E
R166	B-8H	R302	B-9H	R330	B-8C	R358	B-10D	R386	B-11E
R167	B-8J	R303	B-9H	R331	B-8C	R359	B-10D	R387	B-11D
R168	B-8J	R304	B-9H	R332	B-8C	R360	B-9D	R388	B-11E
R169	B-7J	R305	B-9J	R333	B-10H	R361	B-10D	R389	B-10D
R170	B-7J	R306	B-11H	R334	B-10H	R362	B-10D	R390	B-11D
R171	B-8J	R307	B-11H	R335	B-10H	R363	B-9C	R391	B-11D
R172	B-9J	R308	B-12G	R336	B-10H	R364	B-10C	R392	B-11D
R201	B-2C	R309	B-12G	R337	B-10J	R365	B-9C	R393	B-11D
R202	B-3C	R310	B-12G	R338	B-12H	R366	B-9C	R394	B-11D
R203	B-3C	R311	B-9G	R339	B-12H	R367	B-10C	R395	B-10D
R204	B-2C	R312	B-9E	R340	B-13G	R368	B-10H	R396	B-11D
R205	B-7F	R313	B-9G	R341	B-13G	R369	B-10H	R397	B-11D
R206	B-7F	R314	B-9G	R342	B-13G	R370	B-10H	R398	B-10C
R207	B-8G	R315	B-9G	R343	B-10G	R371	B-10H	R399	B-11C
R208	B-8G	R316	B-9E	R344	B-10E	R372	B-10J	R400	B-11C
R209	B-5J	R317	B-8E	R345	B-10G	R373	B-13H	R401	B-12C
R210	B-6J	R318	B-9E	R346	B-10F	R374	B-13H	R402	B-11C
R211	B-1G	R319	B-8D	R347	B-9F	R375	B-10E	R403	B-10C

R404	B-10C	R432	B-12F	R503	B-9E	R602	B-17G	R631	B-15E
R405	B-11C	R433	B-12F	R504	B-9F	R603	B-18H	R632	B-15E
R406	B-13C	R434	B-11F	R505	B-8E	R604	B-18H	R633	B-15E
R407	B-13C	R435	B-12E	R506	B-9F	R605	B-18H	R634	B-15E
R408	B-14C	R436	B-12E	R507	B-9E	R606	B-15G	R635	B-15E
R409	B-14C	R437	B-12E	R508	B-10E	R607	B-16G	R636	B-15E
R410	B-14C	R438	B-11E	R509	B-10E	R608	B-16H	R637	B-15E
R411	B-13C	R439	B-12D	R510	B-10E	R609	B-17H	R638	B-16E
R412	B-13C	R440	B-12D	R511	B-10F	R610	B-16H	R639	B-15E
R413	B-14D	R441	B-12C	R512	B-10E	R611	B-14G	R640	B-15E
R414	B-13F	R442	B-12C	R513	B-10F	R612	B-14G	R641	B-16E
R415	B-13F	R443	B-12C	R514	B-10E	R613	B-15H	R642	B-15F
R416	B-13F	R444	B-12C	R515	B-10E	R614	B-15H	R643	B-15F
R417	B-13F	R445	B-12C	R516	B-11E	R615	B-15H	R644	B-17D
R418	B-13F	R446	B-12C	R517	B-10E	R617	B-14F	R645	B-16F
R419	B-13F	R447	B-12C	R518	B-11E	R618	B-14F	R646	B-16F
R420	B-13F	R448	B-12D	R519	B-11F	R619	B-14F	R647	B-17D
R421	B-13E	R449	B-12D	R520	B-11E	R620	B-15F	R648	B-17D
R422	B-13E	R450	B-12F	R521	B-8C	R621	B-15F	R649	B-17B
R423	B-13E	R451	B-12E	R522	B-8C	R622	B-16E	R650	B-17B
R424	B-13E	R452	B-9F	R523	B-9C	R623	B-16E	R651	B-14B
R425	B-13E	R453	B-9E	R524	B-10C	R624	B-16E	R652	B-14B
R426	B-13E	R454	B-9E	R525	B-10C	R625	B-16E	R653	B-14B
R427	B-13E	R455	B-8F	R526	B-11D	R626	B-16E	R654	B-14B
R428	B-13E	R456	B-9F	R527	B-8F	R627	B-16E	R655	B-18B
R429	B-13E	R457	B-11F	R528	B-9F	R628	B-16E	R656	B-17B
R430	B-11F	R501	B-9E	R529	B-11E	R629	B-16E	R657	B-17B
R431	B-12F	R502	B-9E	R601	B-17G	R630	B-15E	R658	B-17B

— SIDE B —

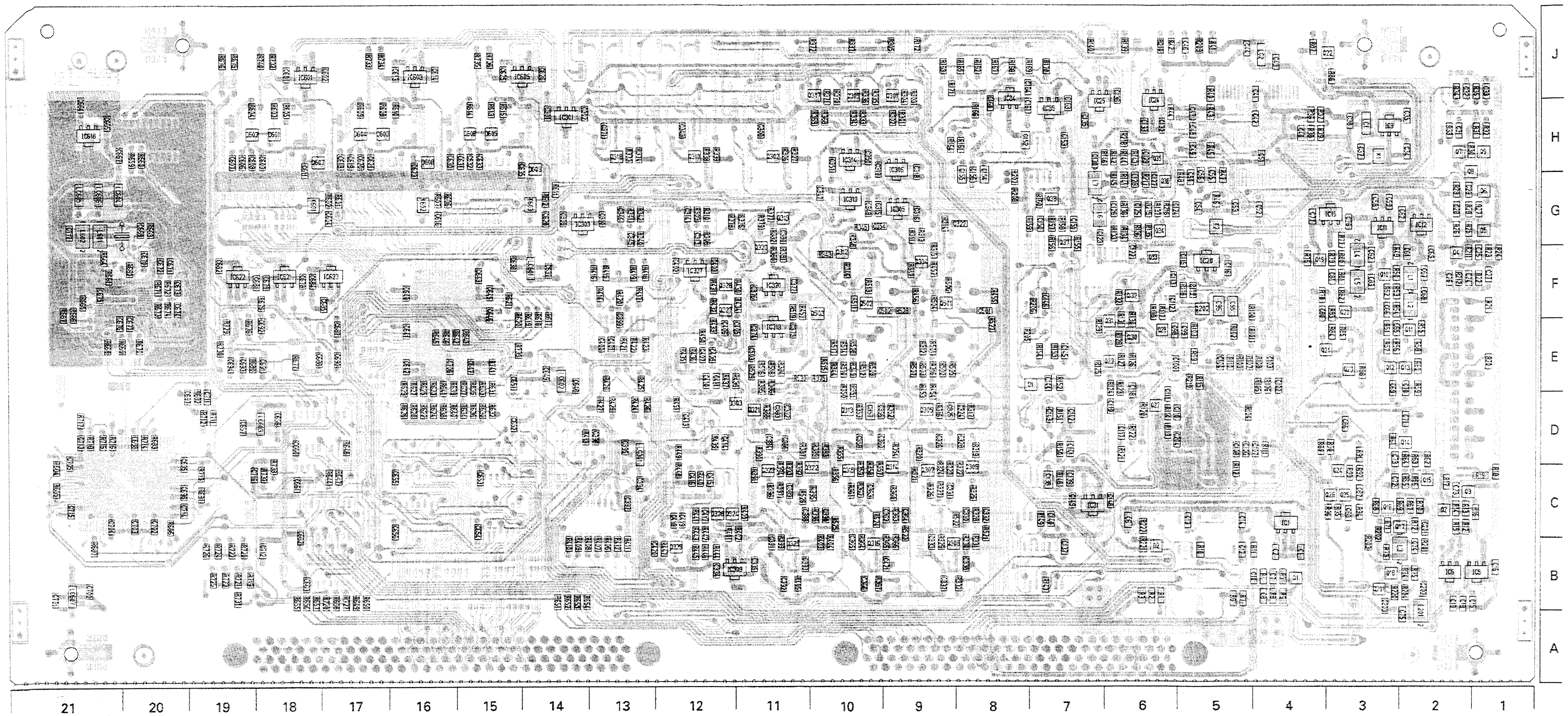

R659	B-20H
R660	B-20H
R661	B-20F
R662	B-20F
R663	B-20G
R664	B-20F
R665	B-20F
R666	B-21F
R667	B-21F
R668	B-20E
R669	B-20E
R670	B-20E
R671	B-19F
R672	B-19F
R673	B-19F
R674	B-19F
R675	B-18J
R676	B-19J
R677	B-18E
R678	B-18F
R679	B-18F
R680	B-18E
R681	B-19D
R682	B-19E
R683	B-20D
R684	B-21D
R685	B-21D
R686	B-19C
R687	B-20C
R711	B-19E
R712	B-19E
R713	B-19D
R714	B-20D
R715	B-20D
R716	B-20D
R717	B-21E
R718	B-20D
R719	B-18C
R720	B-18C
R721	B-18C
R722	B-18C
R723	B-19C
R724	B-19C
R725	B-19C
R726	B-19C
R727	B-17B
R728	B-17B
R729	B-19F
R730	B-19E
R731	B-18B
R732	B-18J
R733	B-17J
R734	B-16J
R735	B-15J
R736	B-15J
R737	B-18D
R738	B-18D
R739	B-15E
R740	B-18J
R741	B-15E
VR1	A-5J
VR2	A-6J
VR3	A-3J
VR4	A-6D
VR5	A-6J
VR6	A-7J
VR7	A-8J
VR8	A-9J
VR9	A-8J
VR10	A-7J
VR301	A-9J
VR302	A-10J
VR303	A-10J
VR304	A-13F
VR305	A-13F
VR306	A-13E
VR307	A-13E
VR308	A-12C
VR601	A-18J
VR602	A-16J
VR603	A-15J
VR604	A-18J
C1	B-4C
C2	B-4C
C3	A-4C
C4	A-6C
C5	A-6C
C6	B-6C
C7	B-4C
C8	B-4B
C9	A-4C
C10	B-4C
C11	A-5C
C12	B-5C
C13	B-5C
C14	B-5C
C15	B-1B
C16	B-1C
C17	A-1C
C18	B-1B
C19	B-2B
C20	A-2C
C21	A-2C
C22	A-2D
C23	B-2D
C24	B-1F
C25	B-1G
C26	B-2F
C27	B-1F
C28	B-2G
C29	B-1G
C30	A-1H
C31	B-2H
C32	B-1H
C33	B-1H
C34	B-2H
C35	B-2H
C36	A-3H
C37	B-3H
C38	B-3H
C39	A-3H
C40	B-4H
C41	B-4H
C42	B-4H
C43	B-4J
C44	B-4J
C45	A-4J
C46	B-5J
C47	B-5H
C48	B-5H
C49	B-5H
C50	B-5G
C51	B-4H
C52	B-4G
C53	B-5G
C54	B-5G
C55	B-5G
C56	B-5G
C57	A-5G
C58	B-3G
C59	B-3G
C60	A-3G
C61	B-2G
C62	B-2G
C63	B-2G
C64	A-2G
C65	B-2F
C66	B-3F
C67	B-2F
C68	B-2F
C69	B-2E
C70	B-2E
C71	B-2E
C72	B-2D
C73	B-2D
C74	B-2C
C75	B-2B
C76	B-3G
C77	B-4G
C78	A-3G
C79	A-4G
C80	B-3F
C81	B-3F
C82	B-3G
C83	B-3F
C84	A-3E
C85	A-3E
C86	B-3E
C87	B-3D
C88	B-3C
C93	A-4F
C94	A-5F
C95	B-5F
C96	B-5F
C97	A-4F
C98	B-5F
C99	B-5F
C100	B-5E
C101	A-4E
C102	B-4E
C103	B-4E
C104	B-5E
C105	A-4D
C106	B-4D
C107	B-4D
C108	B-5D
C109	A-5D
C110	B-5E
C111	B-6E
C112	B-5F
C113	B-5F
C114	A-5F
C115	B-5F
C116	B-5F
C117	B-6D
C118	B-6E
C119	B-6E
C120	A-6F
C121	A-7F
C122	B-6G
C123	B-6G
C124	B-5G
C125	B-6G
C126	B-6G
C127	B-6G
C128	B-6G
C129	B-6H
C130	B-7H
C131	A-6H
C132	B-6H
C133	B-6H
C134	A-6H
C135	B-7H
C136	B-6H
C137	B-7C
C138	B-7D
C139	B-7D
C140	B-7C
C141	B-7D
C142	B-7E
C143	B-7E
C144	B-7E
C145	B-7E
C146	B-7F
C147	A-7D
C148	B-6D
C149	B-7D
C150	B-7G
C151	B-7G
C152	B-7H
C153	B-7H
C154	B-8G
C155	B-8G
C156	B-8G
C157	A-8H
C158	A-9H
C159	A-8H
C160	B-8H
C161	B-7H
C162	A-7H
C163	B-7H
C164	B-7J
C201	B-2C
C202	B-2C
C203	B-3B
C204	B-5D
C301	B-14H
C302	B-14H
C303	A-14H
C304	A-9H
C305	A-11J
C306	A-11H
C307	A-11J
C308	B-11H
C309	B-14G
C310	B-13G
C311	A-14G
C312	A-11H
C313	B-12G
C314	B-12G
C315	B-10G
C316	B-9G
C317	A-9G
C318	B-9H
C319	B-10H
C320	A-9H
C321	A-9F
C322	B-8G
C323	A-8E
C324	B-8E
C325	B-8E
C326	B-9D
C327	A-8D
C328	B-8D
C329	A-8D
C330	B-8C
C331	B-8D
C332	B-8C
C333	B-9C
C334	B-12C
C335	B-11C
C336	A-12C
C337	B-9C
C338	B-8C
C339	A-10H
C340	A-12J
C341	A-12H
C342	A-13J
C343	B-12H
C344	A-12H
C345	B-13G
C346	B-13G
C347	B-10G
C348	B-10G
C349	A-10G
C350	B-10H
C351	B-10H
C352	A-10H
C353	A-10F
C354	B-10G
C355	A-10E
C356	B-10E
C357	B-10E
C358	B-10D
C359	A-9D
C360	B-10D
C361	A-9D
C362	B-9C
C363	B-10D
C364	B-9C
C365	B-10C
C366	B-10C
C367	A-10H
C368	A-13J
C369	A-13H
C370	A-14J
C371	B-13H
C372	A-13H
C373	B-11F
C374	B-11F
C375	A-11F
C376	B-11F
C377	B-11F
C378	A-11F
C379	A-11G
C380	B-11G
C381	A-11E
C382	B-11E
C383	B-11E
C384	B-11D
C385	A-10D
C386	B-11D
C387	A-10D
C388	B-11C
C389	B-11D
C390	B-10C
C391	B-11C
C392	B-11C
C393	B-11C
C394	B-13D
C395	B-13D
C396	A-13D
C397	B-13D
C398	B-13D
C399	B-13F
C400	B-13E
C401	B-13E
C402	B-12F
C403	B-12F
C404	A-12F
C405	B-11F
C406	B-12F
C407	B-12E
C408	B-12E
C409	A-12F
C410	B-12E
C411	B-12E
C412	A-12E
C413	B-12E
C414	B-12D
C415	B-12D
C416	B-12D
C417	B-12C
C418	B-12C
C419	B-12C
C420	B-13C
C421	B-9C
C501	B-8F
C502	B-9F
C503	B-11E
C601	B-18J
C602	B-17J
C603	A-17J
C604	B-17G
C605	A-18H
C606	B-18H
C607	B-18H
C608	B-18H
C609	B-18H
C610	A-17H
C611	B-17H
C612	A-17H
C613	B-16J
C614	B-16J
C615	A-16J
C616	B-16G
C617	A-17H
C618	B-17H
C619	B-17H
C620	B-17H
C621	B-17H
C622	A-16H
C623	B-16H
C624	A-16H
C625	B-15J
C626	B-14J
C627	A-14J
C628	B-14G
C629	A-15H
C630	B-15H
C631	B-15H
C632	B-15H
C633	B-15H
C634	A-14H
C635	B-14H
C636	A-14H
C637	B-14F
C638	B-15F
C639	A-14F
C640	B-16F
C641	B-16F
C642	B-16E
C643	B-15F
C645	B-15F
C646	B-15F
C647	B-15E
C648	B-14E
C649	B-14E
C650	A-14E
C651	B-15E
C652	B-15E
C653	B-15D
C654	B-15C
C655	B-16D
C656	B-16C
C657	B-18E
C658	B-18E
C659	A-18E
C660	B-18D
C661	B-18D
C662	B-18C
C663	B-17C
C664	B-20H
C665	B-20H
C666	A-20H
C667	B-20H
C668	A-20G
C669	B-20G
C670	B-20F
C671	B-19F
C672	B-19F
C673	B-19F
C674	B-19F
C675	B-20F
C676	B-20F
C677	B-20F
C678	B-17F
C679	B-18F
C680	A-18F
C681	B-18F
C682	B-19F
C683	A-18F
C684	B-17F
C685	B-17F
C686	A-17F
C687	B-17F
C688	B-17E
C689	A-18E
C690	B-17E
C691	B-18E
C692	B-18F
C693	B-18E
C694	B-18E
C695	B-19D
C696	B-19D
C697	B-19E
C698	B-20D
C699	A-21C
C700	B-20C
C701	B-21B
C702	B-20C
C703	B-20C
C704	B-20C
C705	B-21D
C706	B-15E
C711	B-19E
C712	B-18C
C713	B-21D
C714	B-19D
C715	B-21D
C716	B-18D
C717	B-21G
VC1	A-6D
L1	B-2F
L2	B-2F
L3	B-2C
L4	B-3G
L5	B-3F
L6	B-6G
L7	B-7G
L201	B-2B
L601	B-20G
L602	B-20G
DL301	A-9F
DL302	A-10F
TP1	A-3B
TP2	A-5D
TP3	A-4D
TP4	A-1G
TP5	A-2E
TP6	A-2C
TP7	A-2B
TP8	A-3F
TP9	A-3B
TP10	A-4F
TP11	A-7G
TP12	A-5F
TP13	A-4E
TP14	A-4E
TP15	A-6D
TP16	A-6E
TP17	A-6G
TP18	A-7H
TP19	A-6G
TP20	A-7J
TP21	A-7G
TP22	A-8F
TP23	A-5E
TP51	A-6C
TP52	A-2G
TP53	A-2D
TP54	A-3D
TP55	A-4F
TP56	A-6H
TP57	A-7G
TP301	A-11G
TP302	A-8D
TP303	A-8B
TP304	A-12G
TP305	A-10D
TP306	A-9C
TP307	A-13G
TP308	A-11D
TP309	A-10C
TP310	A-12C
TP311	A-12D
TP312	A-12E
TP313	A-12F
TP314	A-12E
TP351	A-11H
TP352	A-9C
TP353	A-13H
TP354	A-10C
TP355	A-14H
TP356	A-11C
TP357	A-13C
TP601	A-18C
TP602	A-16C
TP603	A-18C
TP604	A-20E
TP681	A-18C
TP682	A-21E
K1	B-3H
K2	B-5G
K601	B-17G
K602	B-16G
K603	B-14G
LC1	B-3H
LC2	B-4J
LC301	B-13D
LC601	B-14F
LC602	B-14E
LC603	B-18E
LC604	B-20G
LC605	B-21G
LC606	B-20G
LC607	B-21B
RA301	A-13D
RA302	A-14D
RA601	A-18G
RA602	A-18G
RA603	A-17G
RA604	A-16G
RA605	A-15G
RA606	A-15G
RA607	A-16E
RA608	A-16E
RA609	A-15B
RA610	A-15C
RA611	A-14B
RA612	A-14C
RA613	A-16B
RA614	A-16C
RA615	A-16B
RA616	A-15C
TB1	A-3J
TB2	A-1B
TB3	A-21B
TB4	A-19J
FL1	A-2D
FL301	A-8G
FL302	A-9G
FL303	A-10G
CN1	A-16A
CN2	A-8A
X1	A-5D
X601	A-20G

4.33 OUT/GEN SCHEMATIC DIAGRAMS

— DIAGRAM 1/3 —

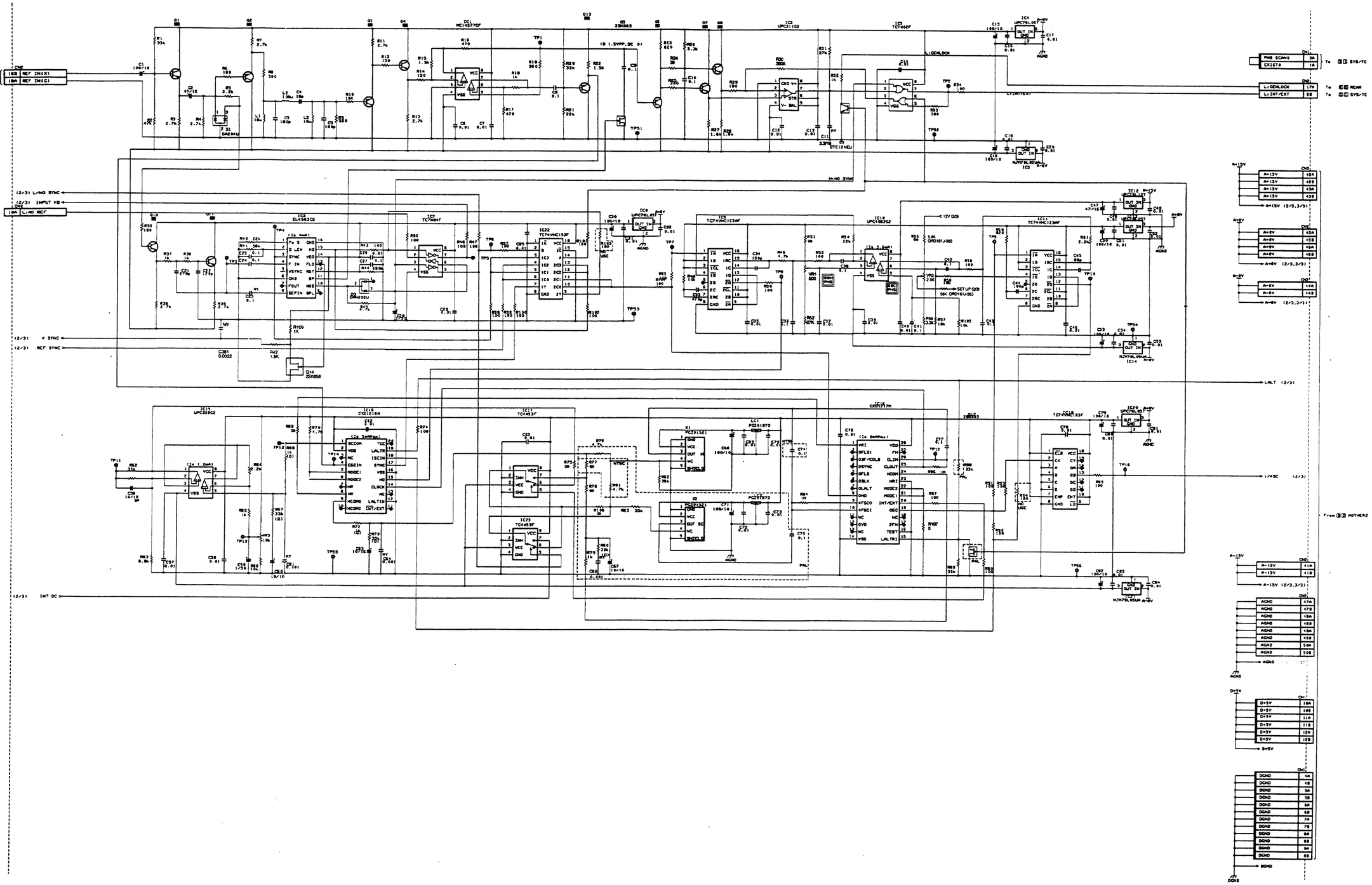

4-64

— DIAGRAM 2/3 —

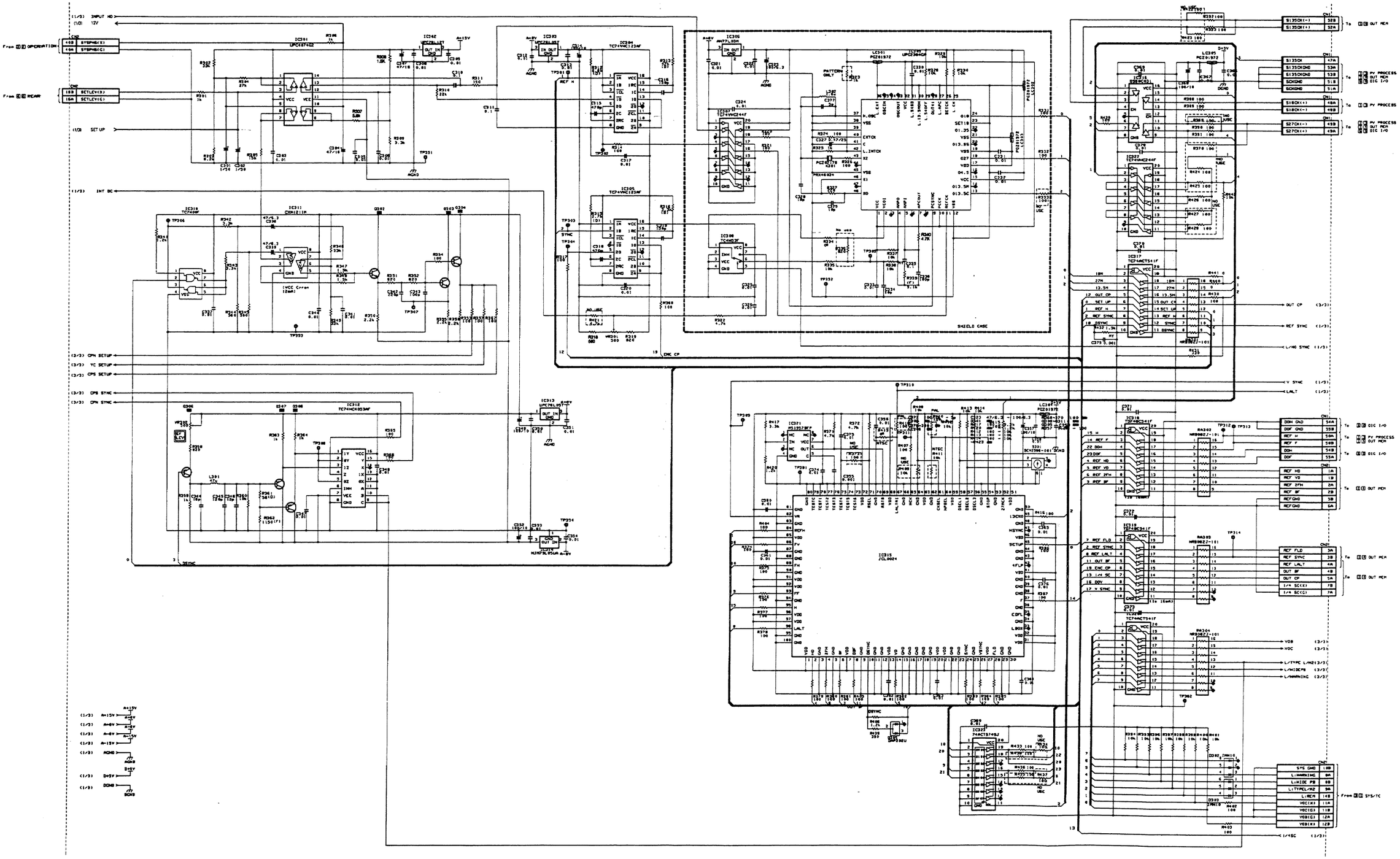

— DIAGRAM 3/3 —

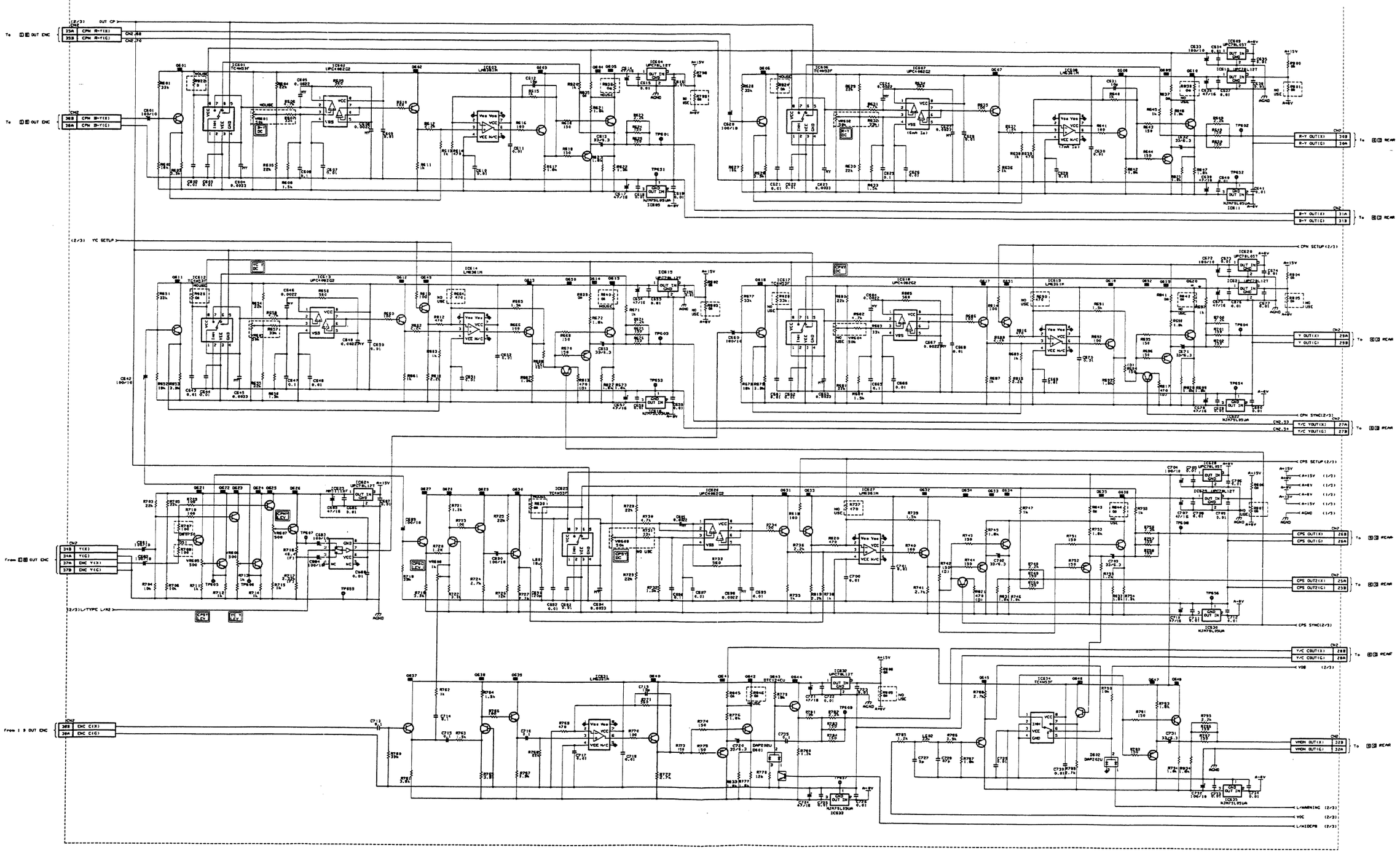

4-66

4.34 OUT/GEN CIRCUIT BOARDS

— SIDE A —

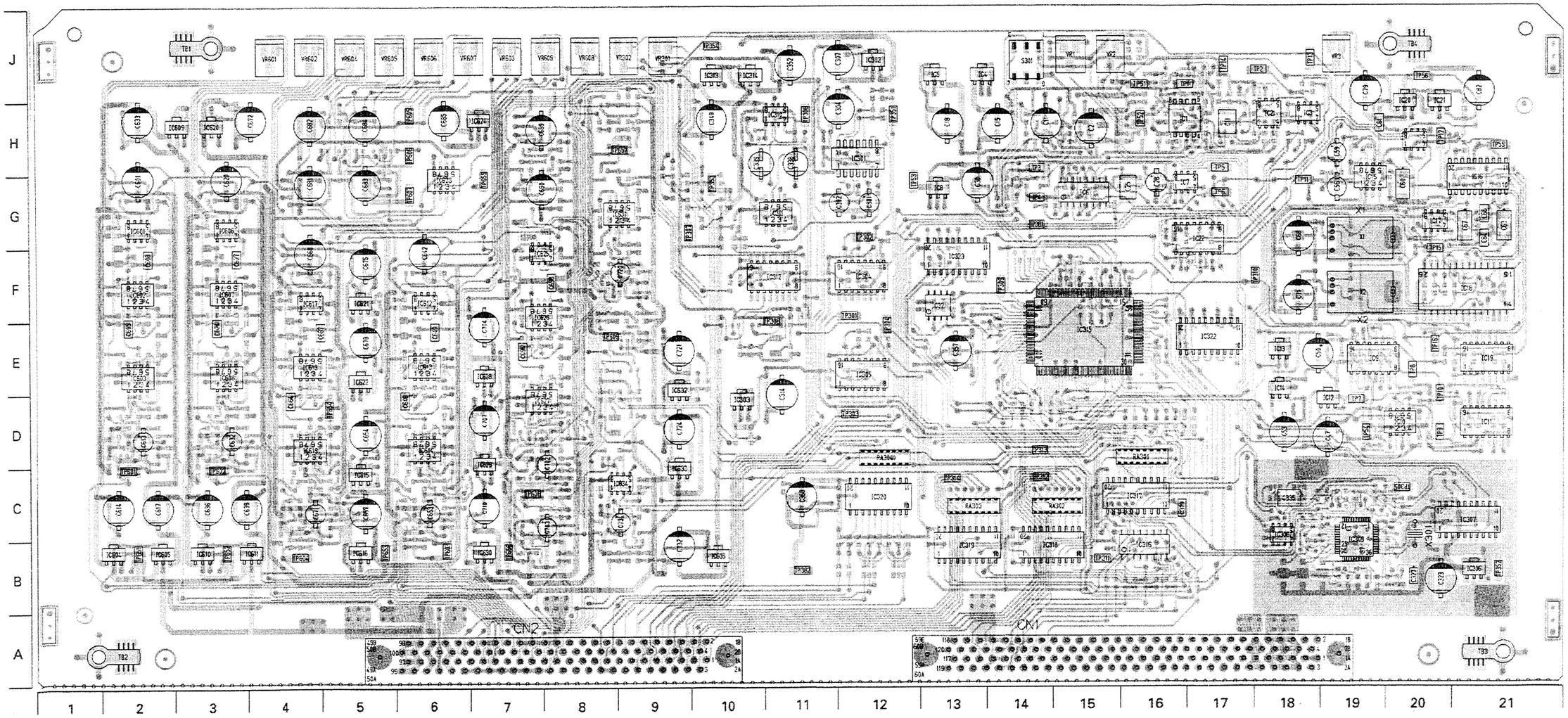

● ADDRESS TABLE OF BOARD PARTS

Side — A-1C — Y axis / X axis

Each address may have an address error by one interval.

IC1	A- 16H	IC306	A- 20C	IC611	A- 3C	Q3	B- 16H	Q611	B- 6F	Q639	B- 8H	R2	B- 14H	R30	B- 17H	R58	B- 20D	R86	B- 20F	R308	B- 12H	R336	B- 19D	R364	B- 10F	R392	B- 16C	R420	B- 13F	R606	B- 2F	R634	B- 3F	R662	B- 6E	R690	B- 4D	R718	B- 7H
IC2	A- 17H	IC307	A- 20C	IC612	A- 6F	Q4	B- 16H	Q612	B- 6E	Q640	B- 8G	R3	B- 14H	R31	B- 17H	R59	B- 20E	R87	B- 20F	R309	B- 12H	R337	B- 19D	R365	B- 10F	R393	B- 15C	R421	B- 9J	R607	B- 2F	R635	B- 3E	R663	B- 6E	R691	B- 4D	R719	B- 8H
IC3	A- 18H	IC308	A- 18C	IC613	A- 6E	Q5	B- 17J	Q613	B- 6D	Q641	B- 9F	R4	B- 14H	R32	B- 18H	R60	B- 21E	R88	B- 21F	R310	B- 12H	R338	B- 19D	R366	B- 10F	R394	B- 12C	R422	B- 16C	R608	B- 2F	R636	B- 3E	R664	B- 6D	R692	B- 4D	R720	B- 8H
IC4	A- 14J	IC309	A- 19C	IC614	A- 6D	Q6	B- 17H	Q614	B- 6C	Q642	B- 8F	R5	B- 15H	R33	B- 18J	R61	B- 20E	R89	B- 21F	R311	B- 12H	R339	B- 19D	R367	B- 9H	R395	B- 12C	R423	B- 16C	R609	B- 2F	R637	B- 3E	R665	B- 6D	R693	B- 4D	R721	B- 7H
IC5	A- 13J	IC310	A- 11H	IC615	A- 5D	Q7	B- 17H	Q615	B- 6C	Q643	B- 8E	R6	B- 15H	R34	B- 18J	R62	B- 18G	R90	B- 20F	R312	B- 12F	R340	B- 18D	R368	B- 12E	R396	B- 12C	R424	B- 16E	R610	B- 2E	R638	B- 3F	R666	B- 6D	R694	B- 4D	R722	B- 8H
IC6	A- 15G	IC311	A- 11G	IC616	A- 5C	Q8	B- 17H	Q616	B- 4F	Q644	B- 9F	R7	B- 15H	R35	B- 14G	R63	B- 18G	R91	B- 20E	R313	B- 12G	R341	B- 11H	R369	B- 16C	R397	B- 12C	R425	B- 16F	R611	B- 2E	R639	B- 3E	R667	B- 6D	R695	B- 4D	R723	B- 7H
IC7	A- 16G	IC312	A- 10F	IC617	A- 4F	Q9	B- 18H	Q617	B- 4E	Q645	B- 9E	R8	B- 15H	R36	B- 13G	R64	B- 19H	R92	B- 21E	R314	B- 12G	R342	B- 11H	R370	B- 16C	R398	B- 12C	R426	B- 17F	R612	B- 2E	R640	B- 3E	R668	B- 6D	R696	B- 4D	R724	B- 8G
IC8	A- 13G	IC313	A- 10J	IC618	A- 4E	Q10	B- 14G	Q618	B- 4D	Q646	B- 8D	R9	B- 16H	R37	B- 14G	R65	B- 19H	R93	B- 20E	R315	B- 12E	R343	B- 11H	R371	B- 15F	R399	B- 12C	R427	B- 17F	R613	B- 2F	R641	B- 3E	R669	B- 6D	R698	B- 4D	R725	B- 8G
IC9	A- 19E	IC314	A- 10J	IC619	A- 4D	Q11	B- 14G	Q619	B- 4C	Q647	B- 9C	R10	B- 15H	R38	B- 14G	R66	B- 18G	R94	B- 21E	R316	B- 12F	R344	B- 11H	R372	B- 15F	R400	B- 12C	R428	B- 17F	R614	B- 2E	R642	B- 3E	R670	B- 6D	R698	B- 4D	R726	B- 8G
IC10	A- 19E	IC315	A- 15F	IC620	A- 3H	Q12	B- 20F	Q620	B- 4C	Q648	B- 8C	R11	B- 16H	R39	B- 14G	R67	B- 19G	R95	B- 20E	R317	B- 12F	R345	B- 11H	R373	B- 15F	R401	B- 12C	R429	B- 16C	R615	B- 2E	R643	B- 3E	R671	B- 6D	R699	B- 4C	R727	B- 8G
IC11	A- 20E	IC316	A- 15C	IC621	A- 5F	Q13	B- 16J	Q621	B- 4H	Q649	B- 6D	R12	B- 16H	R40	B- 15G	R68	B- 19G	R96	B- 17G	R318	B- 10D	R346	B- 11G	R374	B- 14F	R402	B- 12C	R430	B- 16E	R616	B- 2E	R644	B- 3E	R672	B- 6D	R700	B- 4C	R728	B- 7F
IC12	A- 18E	IC317	A- 15D	IC622	A- 5E	Q301	B- 10H	Q622	B- 4H	Q650	B- 6D	R13	B- 16H	R41	B- 14G	R69	B- 21G	R97	B- 16F	R319	B- 10D	R347	B- 10G	R375	B- 14F	R403	B- 12C	R431	B- 16E	R617	B- 2E	R645	B- 3E	R673	B- 6C	R701	B- 4C	R729	B- 8F
IC13	A- 18E	IC318	A- 14C	IC623	A- 6G	Q302	B- 10G	Q623	B- 5H	Q651	B- 4D	R14	B- 16H	R42	B- 15G	R70	B- 20G	R98	B- 16F	R320	B- 20D	R348	B- 10G	R376	B- 14E	R404	B- 13F	R432	B- 16D	R618	B- 2E	R646	B- 3E	R674	B- 6C	R702	B- 4C	R730	B- 7F
IC14	A- 18E	IC319	A- 13C	IC624	A- 7H	Q303	B- 10G	Q624	B- 5H	Q652	B- 5D	R15	B- 16H	R43	B- 15G	R71	B- 20G	R99	B- 16F	R321	B- 20D	R349	B- 11G	R377	B- 14E	R405	B- 14E	R433	B- 13F	R619	B- 2E	R647	B- 3D	R675	B- 6C	R703	B- 4G	R731	B- 7F
IC15	A- 19G	IC320	A- 12D	IC625	A- 7G	Q304	B- 10G	Q625	B- 5H	Q653	B- 7E	R16	B- 16H	R44	B- 15G	R72	B- 21G	R100	B- 17F	R322	B- 17C	R350	B- 10G	R378	B- 14E	R406	B- 15E	R434	B- 13F	R620	B- 2E	R648	B- 3D	R676	B- 6C	R704	B- 4G	R732	B- 7F
IC16	A- 20G	IC321	A- 13F	IC626	A- 7F	Q306	B- 11F	Q626	B- 5H	Q654	B- 8E	R17	B- 16J	R45	B- 16G	R73	B- 20G	R101	B- 16G	R323	B- 19C	R351	B- 10G	R379	B- 14E	R407	B- 15F	R435	B- 13G	R621	B- 2E	R649	B- 3D	R677	B- 4F	R705	B- 4H	R733	B- 8F
IC17	A- 20G	IC322	A- 16F	IC627	A- 7E	Q307	B- 10F	Q627	B- 7H			R18	B- 16J	R46	B- 17G	R74	B- 20H	R102	B- 16G	R324	B- 19C	R352	B- 10G	R380	B- 15E	R408	B- 15F	R436	B- 13G	R622	B- 2D	R650	B- 3D	R678	B- 4F	R706	B- 4H	R734	B- 7E
IC18	A- 20F	IC323	A- 13G	IC628	A- 7E	Q308	B- 10F	Q628	B- 7H	D1	B- 15H	R19	B- 16H	R47	B- 17G	R75	B- 20G	R103	B- 16G	R325	B- 19C	R353	B- 9G	R381	B- 16E	R409	B- 15F	R437	B- 13F	R623	B- 2D	R651	B- 6F	R679	B- 4F	R707	B- 4H	R735	B- 8E
IC19	A- 20E	IC601	A- 2G	IC629	A- 7D	Q601	B- 2G	Q629	B- 7G	D3	B- 15G	R20	B- 16H	R48	B- 19E	R76	B- 21G	R104	B- 17G	R326	B- 19C	R354	B- 10G	R382	B- 16E	R410	B- 15F	R438	B- 13G	R624	B- 2D	R652	B- 6F	R680	B- 4E	R708	B- 4H	R736	B- 8E
IC20	A- 19H	IC602	A- 2F	IC630	A- 7C	Q602	B- 2E	Q630	B- 7G	D301	B- 18D	R21	B- 16H	R49	B- 19E	R77	B- 21G	R105	B- 15J	R327	B- 19C	R355	B- 9G	R383	B- 16E	R411	B- 15F	R439	B- 15E	R625	B- 2D	R653	B- 6F	R681	B- 4E	R709	B- 5H	R737	B- 8D
IC21	A- 20H	IC603	A- 2E	IC631	A- 8G	Q603	B- 2E	Q631	B- 7E	D302	B- 12C	R22	B- 15J	R50	B- 19F	R78	B- 20G	R106	B- 20G	R328	B- 19C	R356	B- 9G	R384	B- 16E	R412	B- 15F	R440	B- 15C	R626	B- 3G	R654	B- 6E	R682	B- 4E	R710	B- 5H	R738	B- 8E
IC22	A- 16G	IC604	A- 2C	IC632	A- 9E	Q604	B- 2D	Q632	B- 7D	D303	B- 12C	R23	B- 17J	R51	B- 14J	R79	B- 20G	R301	B- 12G	R329	B- 19C	R357	B- 9H	R385	B- 16E	R413	B- 15F	R441	B- 15C	R627	B- 3G	R655	B- 6E	R683	B- 4E	R711	B- 5H	R739	B- 8D
IC23	A- 19H	IC605	A- 2C	IC633	A- 9D	Q605	B- 2D	Q633	B- 7D	D304	B- 18D	R24	B- 17H	R52	B- 14J	R80	B- 20G	R302	B- 12G	R330	B- 19C	R358	B- 11F	R386	B- 16E	R414	B- 15F	R442	B- 15D	R628	B- 3G	R656	B- 6E	R684	B- 4E	R712	B- 5H	R740	B- 7E
IC301	A- 12H	IC606	A- 3G	IC634	A- 8D	Q606	B- 3G	Q634	B- 7D	D305	B- 15E	R25	B- 17H	R53	B- 19E	R81	B- 19G	R303	B- 12G	R331	B- 18C	R359	B- 11F	R387	B- 16E	R415	B- 16F	R601	B- 2G	R629	B- 3F	R657	B- 6E	R685	B- 4E	R713	B- 5H	R741	B- 8D
IC302	A- 12J	IC607	A- 3F	IC635	A- 10C	Q607	B- 3E	Q635	B- 7C	D601	B- 9E	R26	B- 17H	R54	B- 19D	R82	B- 19G	R304	B- 12G	R332	B- 18C	R360	B- 10E	R388	B- 15C	R416	B- 16F	R602	B- 2G	R630	B- 3F	R658	B- 6E	R686	B- 4E	R714	B- 5H	R742	B- 7D
IC303	A- 10E	IC608	A- 3E			Q608	B- 3E	Q636	B- 7C	D602	B- 8D	R27	B- 17H	R55	B- 16J	R83	B- 19F	R305	B- 12G	R333	B- 18C	R361	B- 11F	R389	B- 15C	R417	B- 13F	R603	B- 2G	R631	B- 3F	R659	B- 6E	R687	B- 4E	R715	B- 5H	R743	B- 7D
IC304	A- 12F	IC609	A- 2H	Q1	B- 14H	Q609	B- 3D	Q637	B- 8H			R28	B- 17H	R56	B- 16J	R84	B- 19F	R306	B- 11H	R334	B- 18D	R362	B- 11F	R390	B- 16C	R418	B- 15F	R604	B- 2F	R632	B- 3F	R660	B- 6E	R688	B- 4E	R716	B- 5H	R744	B- 8D
IC305	A- 12E	IC610	A- 3C	Q2	B- 15H	Q610	B- 3D	Q638	B- 9H	R1	B- 14H	R29	B- 17H	R57	B- 19E	R85	B- 20F	R307	B- 12H	R335	B- 18D	R363	B- 10F	R391	B- 16C	R419	B- 15F	R605	B- 2F	R633	B- 3F	R661	B- 6E	R689	B- 4E	R717	B- 5H	R745	B- 7D

4-67

— SIDE B —

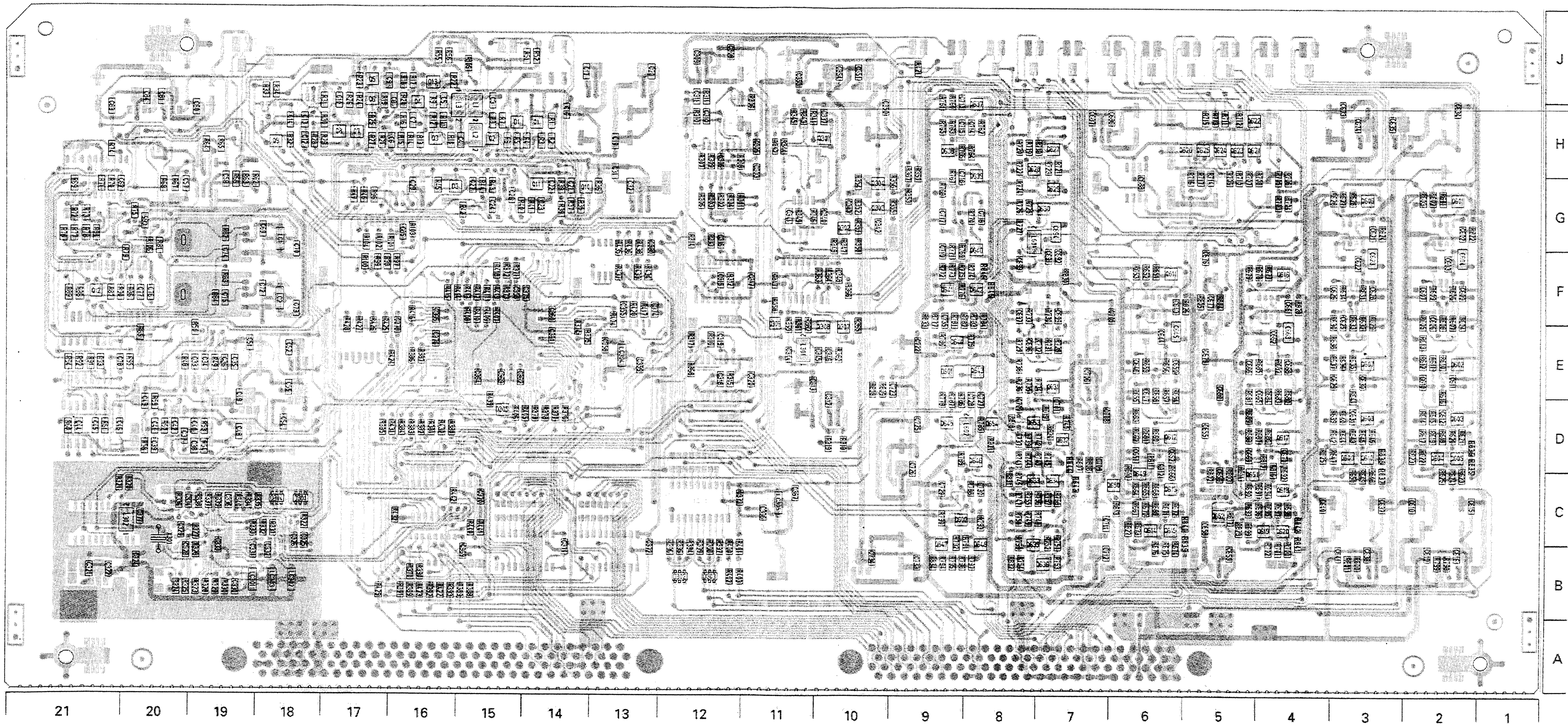

R746	B-8D
R747	B-8D
R748	B-7D
R749	B-8D
R750	B-8D
R751	B-7C
R752	B-7C
R753	B-7C
R754	B-8C
R755	B-8D
R756	B-7D
R757	B-7D
R758	B-7D
R759	B-8C
R760	B-9H
R761	B-9H
R762	B-8H
R763	B-9H
R764	B-8H
R765	B-9H
R766	B-8H
R767	B-9H
R768	B-9G
R769	B-8G
R770	B-8G
R771	B-9G
R772	B-9F
R773	B-9F

R774	B-8F
R775	B-8F
R776	B-8F
R777	B-9F
R778	B-9E
R779	B-8F
R780	B-9F
R781	B-9F
R782	B-8F
R783	B-8F
R784	B-8F
R785	B-8E
R786	B-8E
R787	B-9E
R788	B-8D
R789	B-8D
R790	B-9D
R791	B-8C
R792	B-9C
R793	B-8C
R794	B-9C
R795	B-9C
R796	B-8C
R797	B-8C
R798	B-2C
R799	B-2C
R800	B-3C
R801	B-3C

R802	B-5D
R803	B-5D
R804	B-5F
R805	B-5F
R806	B-7D
R807	B-7D
R808	B-10E
R809	B-10E
R810	B-6D
R811	B-6D
R812	B-6D
R813	B-6D
R814	B-5D
R815	B-4D
R816	B-4D
R817	B-5D
R818	B-8E
R819	B-7E
R820	B-7E
R821	B-8D
R822	B-1G
R823	B-2D
R824	B-3G
R825	B-3D
R826	B-5F
R827	B-6C
R828	B-4F
R829	B-5C

R830	B-7F
R831	B-8D
R832	B-8C
R833	B-9F
R834	B-9C
R835	B-1D
R836	B-1D
R837	B-3D
R838	B-3D
R839	B-5C
R840	B-5C
R841	B-4C
R842	B-4C
R843	B-7D
R844	B-7D
R845	B-8F
R846	B-8F
VR1	A-15J
VR2	A-15J
VR3	A-18J
VR301	A-9J
VR302	A-9J
VR601	A-4J
VR602	A-4J
VR603	A-7J
VR604	A-5J
VR605	A-5J

VR606	A-6J
VR607	A-6J
VR608	A-8J
VR609	A-7J
C1	A-14H
C2	A-15H
C3	B-15H
C4	B-15H
C5	B-16H
C6	B-16H
C7	B-16H
C8	B-16H
C9	B-16J
C10	B-17H
C11	A-17H
C12	B-18H
C13	B-18H
C14	B-18H
C15	A-14H
C16	B-14H
C17	B-14J
C18	A-13H
C19	B-13H
C20	B-13J
C21	B-14G
C22	B-14G
C23	B-14G

C24	B-15G
C25	A-15G
C26	B-15G
C27	B-15G
C28	A-16G
C29	B-16G
C30	A-13G
C31	B-13H
C32	B-13G
C33	B-19E
C34	B-19E
C35	B-18E
C36	B-19E
C37	B-19D
C38	B-19D
C39	B-20D
C40	B-19E
C41	B-20E
C42	B-19E
C43	B-20E
C44	B-21E
C45	B-20E
C46	B-20E
C47	A-18D
C48	B-18E
C49	B-18E
C50	A-18E
C51	B-18F

C52	B-18E
C53	A-18D
C54	B-18E
C55	B-18E
C56	A-18G
C57	B-19G
C58	B-19G
C59	A-18H
C60	A-19G
C61	A-19H
C62	B-20G
C63	A-21G
C64	A-20G
C65	B-20G
C66	A-20G
C67	A-20G
C68	A-18G
C69	B-18G
C70	B-18G
C71	A-18F
C72	B-18F
C73	B-18F
C74	B-19G
C75	B-19F
C76	B-20F
C77	B-20F
C78	B-20E
C79	A-19H

C80	B-19H
C81	B-19H
C82	A-20H
C83	B-20H
C84	B-20H
C85	B-16G
C301	A-12G
C302	A-12G
C303	B-11H
C304	A-12H
C305	B-11H
C306	B-12H
C307	A-12J
C308	B-12J
C309	B-12J
C310	B-12H
C311	B-12H
C312	B-10E
C313	B-11E
C314	A-11E
C315	B-12F
C316	B-12G
C317	B-11F
C318	B-12E
C319	B-12F
C320	B-11E
C321	B-20C
C322	B-20C

C323	A-20C
C324	B-20C
C325	B-17C
C326	B-18C
C327	A-19C
C328	B-19C
C329	B-19C
C330	B-18C
C331	B-18C
C332	B-18C
C333	B-19C
C334	B-19D
C335	A-18D
C336	B-19D
C337	B-10H
C338	A-11H
C339	A-10H
C340	B-10G
C341	B-11G
C342	B-10G
C343	B-10G
C344	B-11E
C345	B-10E
C346	B-10E
C347	B-11F
C348	B-10F
C349	A-10H
C350	B-10H

C351	B-10J
C352	A-11J
C353	B-11J
C354	B-10J
C355	B-13F
C356	B-15F
C357	A-13E
C358	B-13E
C359	B-13E
C360	B-14F
C361	B-14F
C362	B-15E
C363	B-15E
C364	B-15E
C365	B-16F
C366	B-11D
C367	B-11D
C368	A-11D
C369	B-15C
C370	B-15D
C371	B-14C
C372	B-13C
C373	B-12D
C374	B-13F
C375	B-14F
C376	B-16F
C377	B-20C
C378	B-16F

C379	A-16D
C380	B-13G
C601	A-2G
C602	B-2G
C603	B-2G
C604	B-2G
C605	A-2F
C606	B-2F
C607	B-2F
C608	A-2G
C609	B-2F
C610	B-2E
C611	B-2E
C612	B-2E
C613	A-2D
C614	A-2D
C615	B-1D
C616	B-2C
C617	A-2D
C618	B-2D
C619	B-2C
C620	A-3G
C621	B-3G
C622	B-3G
C623	B-3G
C624	A-3F
C625	B-3F
C626	B-3F

C627	A-3G
C628	B-3F
C629	B-3E
C630	B-3E
C631	B-3E
C632	A-3D
C633	A-2H
C634	B-2H
C635	B-3H
C636	A-3D
C637	B-3D
C638	B-3C
C639	A-3D
C640	B-3D
C641	B-3C
C642	A-6G
C643	B-6F
C644	B-6F
C645	B-6F
C646	A-6E
C647	B-6E
C648	B-6E
C649	A-6F
C650	B-6E
C651	B-6D
C652	B-6D
C653	A-6D
C654	A-5D

C655	B-5E
C656	B-5D
C657	A-5D
C658	B-5C
C659	B-5C
C660	A-4G
C661	B-4F
C662	B-4F
C663	B-4F
C664	A-4E
C665	B-4E
C666	B-4E
C667	A-4F
C668	B-4E
C669	B-4D
C670	B-4D
C671	A-4D
C672	A-3H
C673	B-3H
C674	B-3H
C675	A-5F
C676	B-5G
C677	B-5F
C678	A-5F
C679	B-5E
C680	B-5E
C681	A-4G
C682	A-4H

C683	A-5G
C684	A-5H
C685	A-6H
C686	B-6H
C687	B-7H
C688	B-6G
C689	A-7H
C690	A-7G
C691	B-7G
C692	B-7G
C693	B-8F
C694	B-7G
C695	A-7E
C696	B-8F
C697	B-8F
C698	A-8F
C699	B-7F
C700	B-8E
C701	B-7E
C702	A-7D
C703	A-7C
C704	A-7F
C705	B-6F
C706	B-7E
C707	A-7E
C708	B-6E
C709	B-7D
C710	A-7D

C711	B-6C
C712	B-6C
C713	B-8H
C714	B-8H
C715	B-8H
C716	B-8H
C717	B-9G
C718	B-8G
C719	B-9G
C720	A-8F
C721	A-9E
C722	B-9F
C723	B-9E
C724	A-9E
C725	B-9E
C726	B-9D
C727	B-8E
C728	B-8E
C729	B-9D
C730	B-8D
C731	A-8C
C732	A-9C
C733	B-9C
C734	B-10C
C735	B-9F
L1	B-15H
L2	B-15H

L3	B-15H
L301	B-11E
L302	B-20C
L601	B-7G
L602	B-8E
TP1	A-16J
TP2	A-17J
TP3	A-14H
TP4	A-14G
TP5	A-17H
TP6	A-17G
TP7	A-19E
TP8	A-19E
TP9	A-20D
TP10	A-20E
TP11	A-18G
TP12	A-20H
TP13	A-18J
TP14	A-17J
TP15	A-20G
TP16	A-20E
TP51	A-16J
TP52	A-16H
TP53	A-13G
TP54	A-19D
TP55	A-21H
TP56	A-20J

TP301	A-12F
TP302	A-12G
TP303	A-12E
TP304	A-12F
TP305	A-19D
TP306	A-11H
TP307	A-9G
TP308	A-11F
TP309	A-14F
TP310	A-17F
TP311	A-15C
TP312	A-14D
TP313	A-14D
TP314	A-13D
TP351	A-12H
TP352	A-21C
TP353	A-10G
TP354	A-10J
TP381	A-14G
TP382	A-11C
TP601	A-2D
TP602	A-3D
TP603	A-6C
TP604	A-4C
TP605	A-6H
TP606	A-6H
TP607	A-6G
TP608	A-7D

TP609	A-8F
TP651	A-2C
TP652	A-3C
TP653	A-5C
TP654	A-4E
TP655	A-7G
TP656	A-7C
TP657	A-8H
LC1	B-18G
LC2	B-18F
LC301	B-18C
LC302	B-18C
LC303	B-18C
LC304	B-13E
LC305	B-11D
RA301	A-16D
RA302	A-15D
RA303	A-13D
RA304	A-12D
S301	A-14J
TB1	A-3J
TB2	A-1B
TB3	A-21B
TB4	A-19J

CN1	A-16A
CN2	A-8A
X1	A-18G
X2	A-18F
X301	A-19C

4.35 OUT ENC SCHEMATIC DIAGRAMS

— DIAGRAM 1/2 —

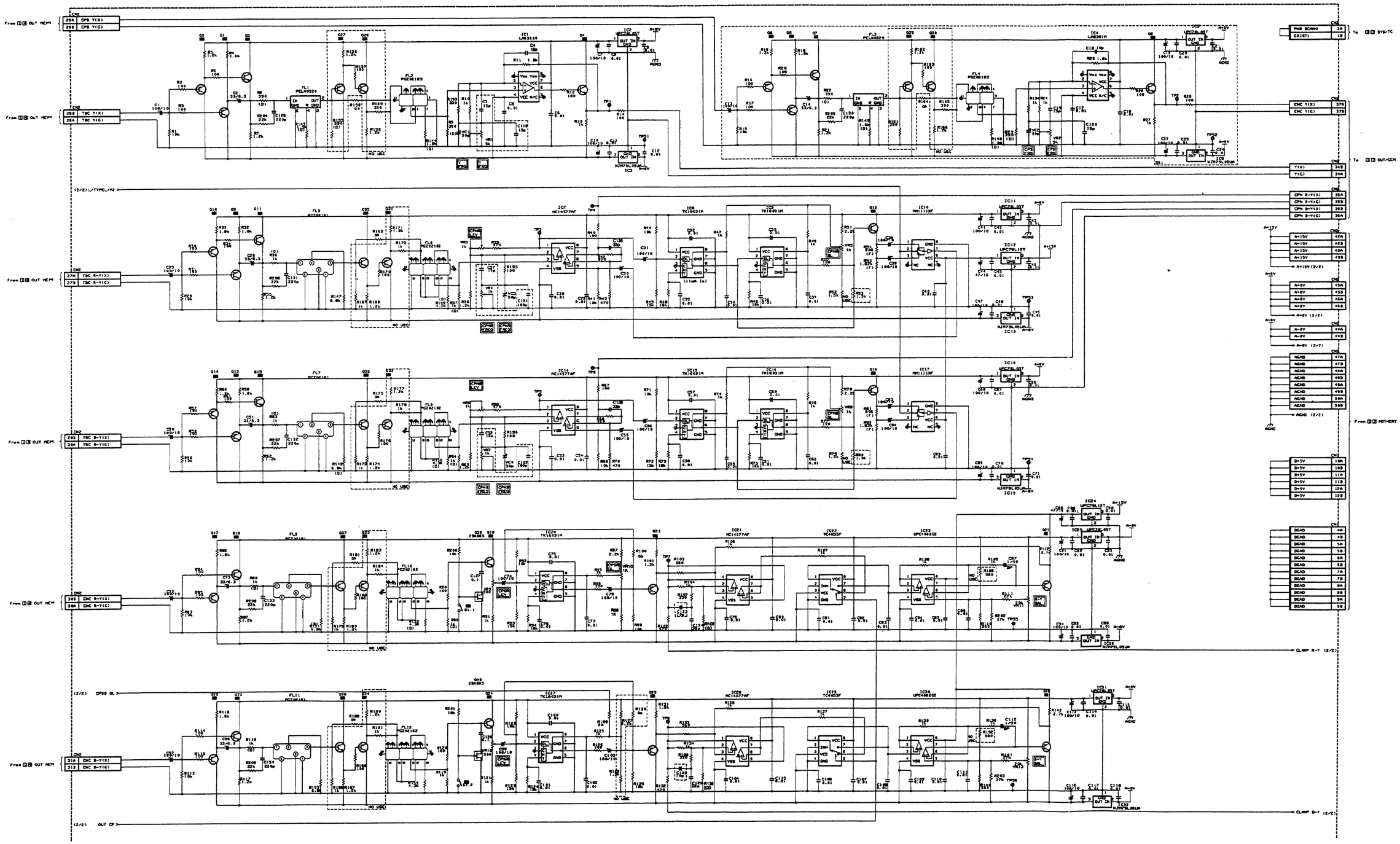

— DIAGRAM 2/2 —

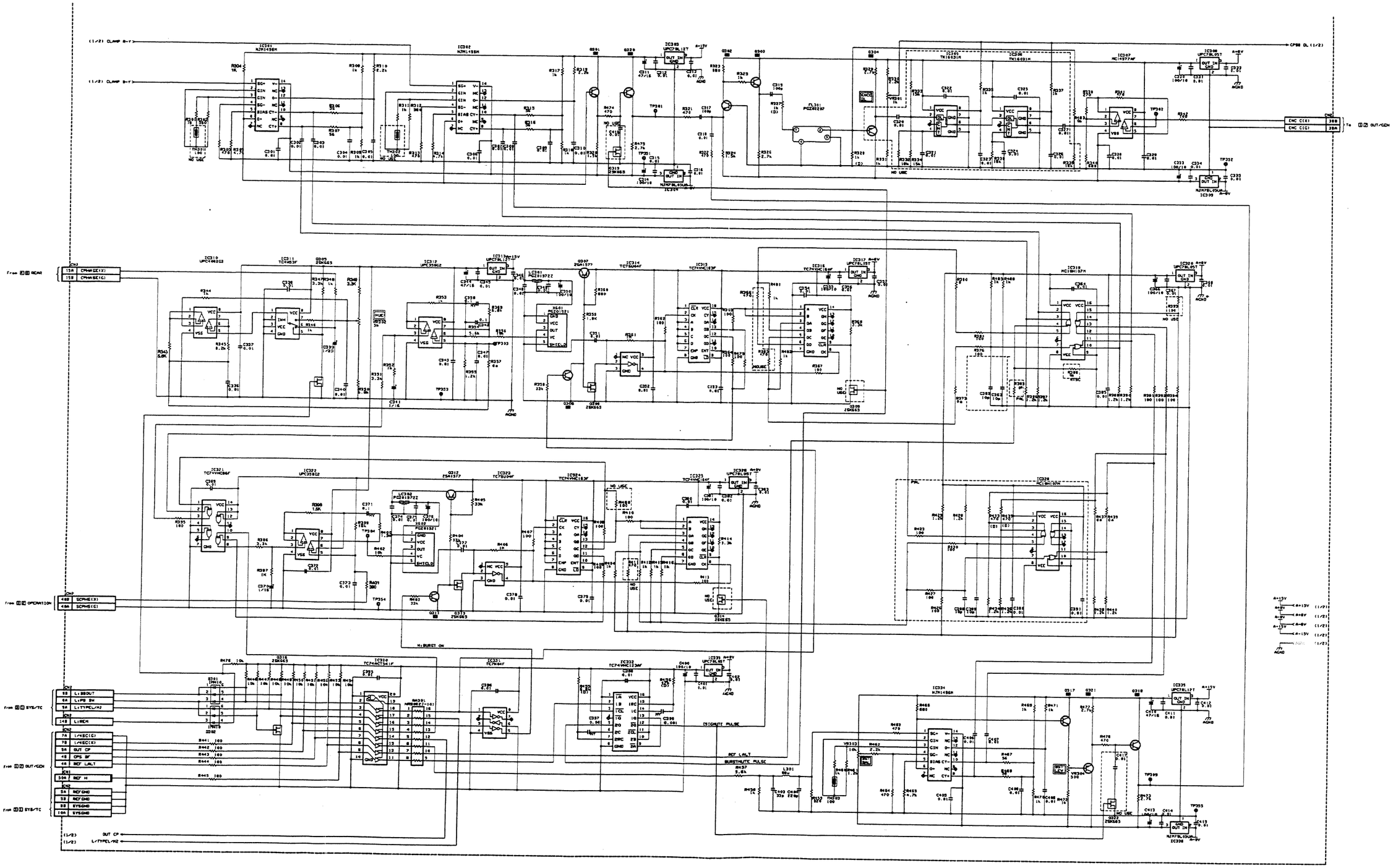

4-70

4.36 OUT ENC CIRCUIT BOARDS

— SIDE A —

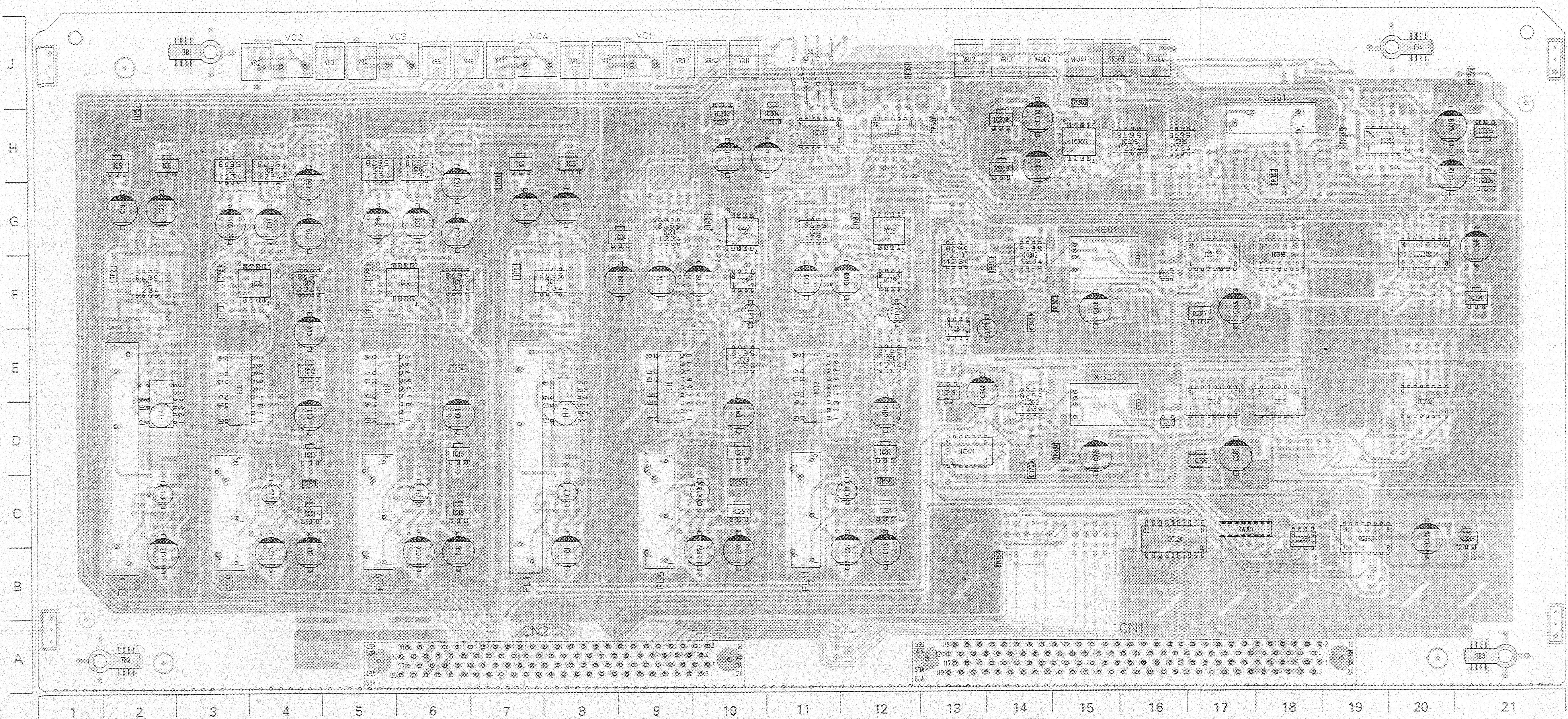

● ADDRESS TABLE OF BOARD PARTS

Each address may have an address error by one interval.

A-1C: Side (A) — X axis (1) — Y axis (C)

IC1	A-7F	IC29	A-12F	IC326	A-16D	Q19	B-9F	Q307	B-15F
IC2	A-7H	IC30	A-12E	IC328	A-19E	Q20	B-10F	Q308	B-16F
IC3	A-8H	IC31	A-12D	IC330	A-16C	Q21	B-10F	Q309	B-18G
IC4	A-2F	IC32	A-12D	IC331	A-18C	Q22	B-11C	Q311	B-16D
IC5	A-2H	IC301	A-12H	IC332	A-18C	Q23	B-12C	Q312	B-15D
IC6	A-2H	IC302	A-11H	IC333	A-20C	Q24	B-11F	Q313	B-16D
IC7	A-3F	IC303	A-10H	IC334	A-19H	Q25	B-12F	Q314	B-18E
IC8	A-3H	IC304	A-11H	IC335	A-20H	Q26	B-12F	Q316	B-14C
IC9	A-4H	IC305	A-16H	IC336	A-20G	Q27	B-8E	Q317	B-20H
IC10	A-4F	IC306	A-15H			Q28	B-8E	Q318	B-19H
IC11	A-4D	IC307	A-15H	Q1	B-8C	Q29	B-2E	Q319	B-13H
IC12	A-4E	IC308	A-14H	Q2	B-8C	Q30	B-2E	Q320	B-13H
IC13	A-4D	IC309	A-14H	Q3	B-8D	Q31	B-4E	Q321	B-18J
IC14	A-5F	IC310	A-13G	Q4	B-7G	Q32	B-6E	Q322	B-18J
IC15	A-5H	IC311	A-13F	Q5	B-2C	Q33	B-10E		
IC16	A-6H	IC312	A-14G	Q6	B-2C	Q34	B-12E	D301	B-14C
IC17	A-6F	IC313	A-13E	Q7	B-2D	Q35	B-3D	D302	B-14C
IC18	A-6D	IC314	A-16F	Q8	B-2G	Q36	B-5D		
IC19	A-6D	IC315	A-16G	Q9	B-4C	Q37	B-9D	R1	B-8C
IC20	A-9G	IC316	A-17G	Q10	B-4C	Q38	B-11D	R2	B-8C
IC21	A-10G	IC317	A-16F	Q11	B-4D	Q39	B-9F	R3	B-8C
IC22	A-10F	IC319	A-19G	Q12	B-4H	Q40	B-11F	R4	B-8D
IC23	A-10E	IC320	A-20F	Q13	B-6C	Q301	B-13H	R5	B-8D
IC24	A-8G	IC321	A-13D	Q14	B-6C	Q302	B-17H	R6	B-8D
IC25	A-10D	IC322	A-14E	Q15	B-6D	Q303	B-18G	R7	B-8D
IC26	A-10D	IC323	A-16E	Q16	B-6H	Q304	B-17G	R8	B-8D
IC27	A-11G	IC324	A-16E	Q17	B-9C	Q305	B-13E	R9	B-8F
IC28	A-12G	IC325	A-17E	Q18	B-10C	Q306	B-16F	R10	B-7F

R11	B-7F	R39	B-3F	R67	B-5G	R95	B-9G	R123	B-11F
R12	B-8G	R40	B-3G	R68	B-6G	R96	B-9G	R124	B-11G
R13	B-8G	R41	B-4G	R69	B-6G	R97	B-9G	R125	B-11G
R14	B-7G	R42	B-3G	R70	B-6G	R98	B-9G	R126	B-11G
R15	B-2C	R43	B-4G	R71	B-5G	R99	B-9F	R127	B-11G
R16	B-2C	R44	B-3G	R72	B-5G	R100	B-9F	R128	B-11G
R17	B-2C	R45	B-3G	R73	B-5G	R101	B-10F	R129	B-11F
R18	B-2D	R46	B-3G	R74	B-5H	R102	B-10G	R130	B-11F
R19	B-2D	R47	B-3H	R75	B-6G	R103	B-10F	R131	B-12F
R20	B-2D	R48	B-4G	R76	B-6H	R104	B-10G	R132	B-12G
R21	B-2D	R49	B-4H	R77	B-6H	R105	B-10G	R133	B-12F
R22	B-2D	R50	B-4H	R78	B-6H	R106	B-10F	R134	B-12G
R23	B-2F	R51	B-4H	R79	B-6H	R107	B-10G	R135	B-12G
R24	B-2F	R52	B-4H	R80	B-6H	R108	B-10E	R136	B-12F
R25	B-1F	R53	B-4H	R81	B-6H	R109	B-10F	R137	B-12G
R26	B-2G	R54	B-4H	R82	B-6H	R110	B-11F	R138	B-12E
R27	B-2G	R55	B-4H	R83	B-10C	R111	B-11F	R139	B-12F
R28	B-2G	R56	B-6C	R84	B-10C	R112	B-10F	R140	B-12F
R29	B-4C	R57	B-6C	R85	B-9C	R113	B-12C	R141	B-13F
R30	B-4C	R58	B-6C	R86	B-10D	R114	B-12C	R142	B-12F
R31	B-4C	R59	B-6D	R87	B-10D	R115	B-11C	R143	B-8D
R32	B-4D	R60	B-6D	R88	B-9D	R116	B-12D	R144	B-8D
R33	B-4D	R61	B-6D	R89	B-10F	R117	B-12D	R145	B-2D
R34	B-4D	R62	B-6D	R90	B-10F	R118	B-11D	R146	B-2D
R35	B-4D	R63	B-6D	R91	B-9G	R119	B-12F	R147	B-3D
R36	B-4D	R64	B-6F	R92	B-9F	R120	B-12F	R148	B-4F
R37	B-4F	R65	B-5F	R93	B-9F	R121	B-11G	R149	B-5D
R38	B-3F	R66	B-5F	R94	B-9G	R122	B-11F	R150	B-6F

R151	B-9D	R179	B-9D	R207	B-6D	R326	B-18H	R354	B-14F
R152	B-9F	R180	B-10D	R208	B-10D	R327	B-18H	R355	B-14G
R153	B-11D	R181	B-9E	R209	B-12D	R328	B-17G	R356	B-14F
R154	B-11F	R182	B-9D	R301	B-12H	R329	B-16H	R357	B-14G
R155	B-8E	R183	B-10E	R302	B-12H	R330	B-15H	R358	B-16F
R156	B-8E	R184	B-10E	R303	B-12H	R331	B-15H	R359	B-15F
R157	B-8E	R185	B-11E	R304	B-12J	R332	B-16G	R360	B-15F
R158	B-8E	R186	B-11D	R305	B-13H	R333	B-16H	R361	B-15G
R159	B-8E	R187	B-12D	R306	B-12J	R334	B-16G	R362	B-16F
R160	B-7E	R188	B-11E	R307	B-12J	R335	B-16H	R363	B-17F
R161	B-2E	R189	B-11D	R308	B-12J	R336	B-16G	R364	B-17F
R162	B-2E	R190	B-12E	R309	B-13J	R337	B-15H	R365	B-18F
R163	B-2E	R191	B-12E	R310	B-12J	R338	B-15G	R366	B-18G
R164	B-2E	R192	B-12E	R311	B-11H	R339	B-15G	R367	B-18G
R165	B-2E	R193	B-8F	R312	B-11H	R340	B-15G	R368	B-18G
R166	B-2E	R194	B-2F	R313	B-11H	R341	B-15G	R369	B-14F
R167	B-3D	R195	B-3F	R314	B-12H	R342	B-15H	R373	B-19F
R168	B-4D	R196	B-5F	R315	B-11J	R343	B-13F	R376	B-19F
R169	B-3E	R197	B-10G	R316	B-11J	R344	B-13F	R380	B-18G
R170	B-4D	R198	B-12G	R317	B-11J	R345	B-13G	R384	B-20F
R171	B-4E	R199	B-15J	R318	B-12J	R346	B-13F	R385	B-19F
R172	B-4E	R200	B-11J	R319	B-11J	R347	B-13F	R386	B-20G
R173	B-5D	R201	B-11J	R320	B-13H	R348	B-13E	R387	B-20G
R174	B-6D	R202	B-10E	R321	B-17G	R349	B-13G	R388	B-20F
R175	B-5E	R203	B-12E	R322	B-17G	R350	B-13G	R389	B-20G
R176	B-6D	R204	B-7D	R323	B-17G	R351	B-14F	R390	B-20G
R177	B-6E	R205	B-2D	R324	B-18H	R352	B-14F	R391	B-20G
R178	B-6E	R206	B-3D	R325	B-17G	R353	B-14F	R392	B-20G

R393	B-19G	R429	B-19D	R459	B-19G			C10	A-8G
R394	B-19G	R430	B-20D	R460	B-19G	VR1	A-8J	C11	B-8G
R395	B-13D	R433	B-19E	R461	B-19G	VR2	A-3J	C12	B-8H
R396	B-14D	R434	B-20E	R462	B-19G	VR3	A-4J	C13	A-2C
R397	B-14D	R435	B-19E	R463	B-19G	VR4	A-5J	C14	A-2D
R398	B-14E	R436	B-20E	R464	B-19G	VR5	A-6J	C15	B-2F
R399	B-14E	R437	B-20E	R465	B-20G	VR6	A-6J	C16	B-2F
R400	B-14E	R438	B-20E	R466	B-20H	VR7	A-7J	C17	B-2F
R401	B-14E	R439	B-20E	R467	B-19H	VR8	A-8J	C18	B-2F
R402	B-14E	R440	B-20E	R468	B-19H	VR9	A-9J	C19	A-2G
R403	B-16D	R441	B-15C	R469	B-19H	VR10	A-10J	C20	B-2G
R404	B-15D	R442	B-15C	R470	B-19H	VR11	A-10J	C21	B-2H
R405	B-15D	R443	B-15C	R471	B-19H	VR12	A-13J	C22	A-2G
R406	B-15E	R444	B-15C	R472	B-16J	VR13	A-14J	C23	B-2G
R407	B-16E	R445	B-15C	R473	B-18H	VR301	A-15J	C24	B-2H
R408	B-17E	R446	B-14C	R474	B-13H	VR302	A-14J	C25	A-4C
R409	B-17E	R447	B-14C	R475	B-13H	VR303	A-15J	C26	A-4D
R410	B-17E	R448	B-15C	R476	B-15C	VR304	A-16J	C27	B-3F
R411	B-18D	R449	B-14C	R477	B-18J			C28	B-4F
R412	B-18D	R450	B-15C	R478	B-18J	C1	A-8C	C29	B-3G
R413	B-18E	R451	B-15C	R479	B-17F	C2	A-8D	C30	A-4G
R414	B-18E	R452	B-15C	R480	B-17E	C3	B-7F	C31	A-3G
R415	B-18D	R453	B-15C	R481	B-18G	C4	B-7F	C32	B-3H
R416	B-18D	R454	B-15C	R482	B-18F	C5	B-8F	C33	B-3G
R423	B-19D	R455	B-19C	R483	B-17H	C6	B-7F	C34	B-3H
R426	B-18D	R456	B-19C	R484	B-18D	C7	A-7G	C35	B-4H
R427	B-20D	R457	B-18G	R485	B-20F	C8	B-7G	C36	B-4G
R428	B-19D	R458	B-18H	R486	B-20F	C9	B-7H	C37	B-4H

— SIDE B —

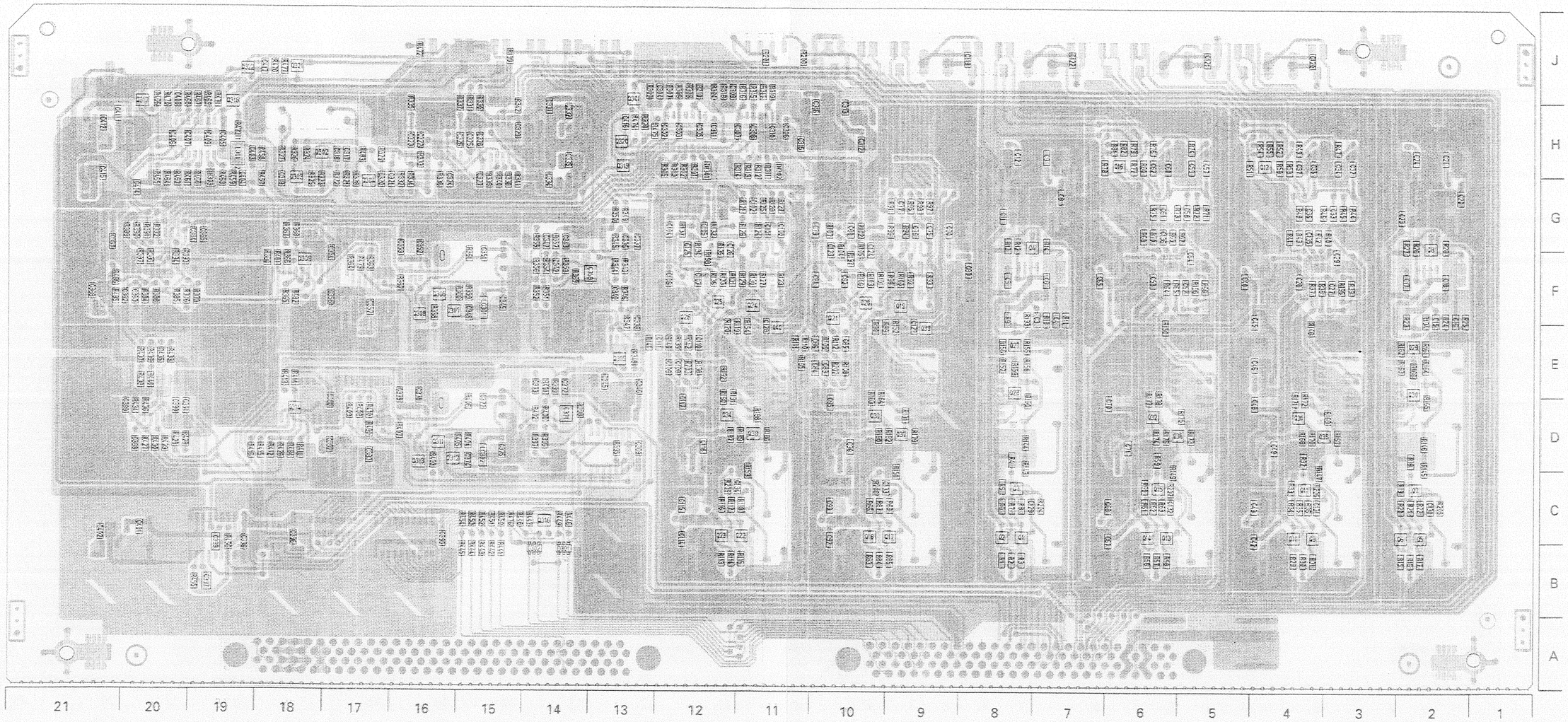

C38	A- 4G	C66	A- 6C	C94	A- 10E	C122	B- 7J	C314	A- 11H	C342	B- 14F	C373	B- 14E	C408	B- 19H	TP53	A- 4D	TH301	B- 12H
C39	A- 4G	C67	B- 6C	C95	B- 10E	C123	B- 10G	C315	B- 11H	C343	B- 14G	C374	B- 15D	C409	B- 19H	TP54	A- 6E	TH302	B- 11H
C40	B- 4F	C68	B- 6D	C96	B- 10D	C124	B- 10G	C316	B- 10H	C344	A- 14E	C375	B- 15D	C410	A- 20H	TP55	A- 10D	TH303	B- 19G
C41	A- 4C	C69	A- 6E	C97	A- 12C	C125	B- 12G	C317	B- 17H	C345	B- 13E	C376	A- 15D	C411	B- 20H	TP56	A- 12D		
C42	B- 4C	C70	B- 6E	C98	A- 12D	C126	B- 12G	C318	B- 17H	C346	B- 13E	C377	B- 15E	C412	B- 20H	TP301	A- 13H	FL1	A- 7C
C43	B- 4D	C71	B- 6D	C99	A- 11F	C127	B- 9F	C319	B- 18G	C347	B- 14G	C378	B- 16E	C413	A- 20H	TP302	A- 15H	FL2	A- 8E
C44	A- 4F	C72	A- 10C	C100	B- 11G	C128	B- 11F	C320	B- 16G	C348	B- 15F	C379	B- 16E	C414	B- 20G	TP303	A- 15F	FL3	A- 2C
C45	B- 4F	C73	A- 10D	C101	B- 11G	C129	B- 7D	C321	B- 16G	C349	B- 15F	C380	B- 17E	C415	B- 20H	TP304	A- 15D	FL4	A- 2E
C46	B- 4E	C74	A- 9F	C102	B- 11G	C130	B- 2D	C322	B- 16H	C350	A- 15F	C381	A- 17D	C416	B- 13H	TP305	A- 18H	FL5	A- 3C
C47	A- 4E	C75	B- 9G	C103	A- 12F	C131	B- 3D	C323	B- 16H	C351	B- 15G	C382	B- 17D	C417	B- 18J	TP351	A- 12J	FL6	A- 3E
C48	B- 4E	C76	B- 9G	C104	B- 12G	C132	B- 6D	C324	B- 16G	C352	B- 16G	C383	B- 17D			TP352	A- 17G	FL7	A- 5C
C49	B- 4D	C77	B- 9G	C105	B- 12G	C133	B- 9D	C325	B- 15H	C353	B- 16G	C388	B- 20D	VC1	A- 9J	TP353	A- 14F	FL8	A- 5E
C50	A- 6C	C78	A- 10F	C106	B- 12F	C134	B- 11D	C326	B- 15H	C354	B- 17G	C389	B- 20E	VC2	A- 4J	TP354	A- 14C	FL9	A- 9C
C51	A- 6D	C79	B- 10G	C107	B- 12F	C135	B- 4G	C327	B- 15G	C355	A- 17F	C390	B- 19E	VC3	A- 5J	TP355	A- 20J	FL10	A- 9E
C52	B- 5F	C80	B- 10G	C108	B- 12E	C136	B- 6G	C328	B- 15H	C356	B- 17F	C391	B- 19E	VC4	A- 7J			FL11	A- 11C
C53	B- 6F	C81	B- 10F	C109	B- 12E	C301	B- 12H	C329	B- 15H	C357	B- 17F	C395	B- 16C			LC301	B- 15F	FL12	A- 11E
C54	B- 5G	C82	B- 10F	C110	B- 12F	C302	B- 13H	C330	A- 14H	C358	B- 14F	C396	B- 18C	L301	B- 18H	LC302	B- 15D	FL301	A- 18H
C55	A- 6G	C83	B- 10E	C111	B- 13F	C303	B- 12H	C331	B- 14H	C362	B- 20F	C397	B- 19C						
C56	A- 5G	C84	B- 10E	C112	A- 12F	C304	B- 13J	C332	B- 14H	C363	B- 20F	C398	B- 18C	TP1	A- 7F			X601	A- 15F
C57	B- 5H	C85	B- 10F	C113	A- 12C	C305	B- 12H	C333	A- 14H	C364	B- 19G	C399	B- 19C	TP2	A- 2F	RA301	A- 17C	X602	A- 15E
C58	B- 5G	C86	B- 10F	C114	B- 12C	C306	B- 11H	C334	B- 14G	C365	B- 19G	C400	A- 20C	TP3	A- 3F				
C59	B- 5H	C87	A- 10F	C115	B- 12D	C307	B- 12H	C335	B- 14H	C366	A- 20G	C401	B- 20C	TP4	A- 3F	S1	A- 11J		
C60	B- 6H	C88	A- 8F	C116	A- 12E	C308	B- 11H	C336	B- 13G	C367	B- 20G	C402	B- 20C	TP5	A- 5F			CN1	A- 16A
C61	B- 6G	C89	B- 8F	C117	B- 12E	C309	B- 12J	C337	B- 13G	C368	B- 20F	C403	B- 18H	TP6	A- 5F	TB1	A- 3J	CN2	A- 8A
C62	B- 6H	C90	B- 9G	C118	B- 12D	C310	B- 11H	C338	B- 13F	C369	B- 13D	C404	B- 18G	TP7	A- 10G	TB2	A- 1B		
C63	A- 6G	C91	A- 10C	C119	B- 8J	C311	A- 10H	C339	A- 14F	C370	A- 14D	C405	B- 19H	TP8	A- 12G	TB3	A- 21B		
C64	A- 6G	C92	B- 10C	C120	B- 4J	C312	B- 10H	C340	B- 13F	C371	B- 14E	C406	B- 19H	TP51	A- 7G	TB4	A- 19J		
C65	B- 7F	C93	B- 10D	C121	B- 5J	C313	B- 10H	C341	A- 14F	C372	B- 14E	C407	B- 19H	TP52	A- 2H				

4-72

4.37 A/NA AUDIO CIRCUIT BOARDS

— SIDE A —

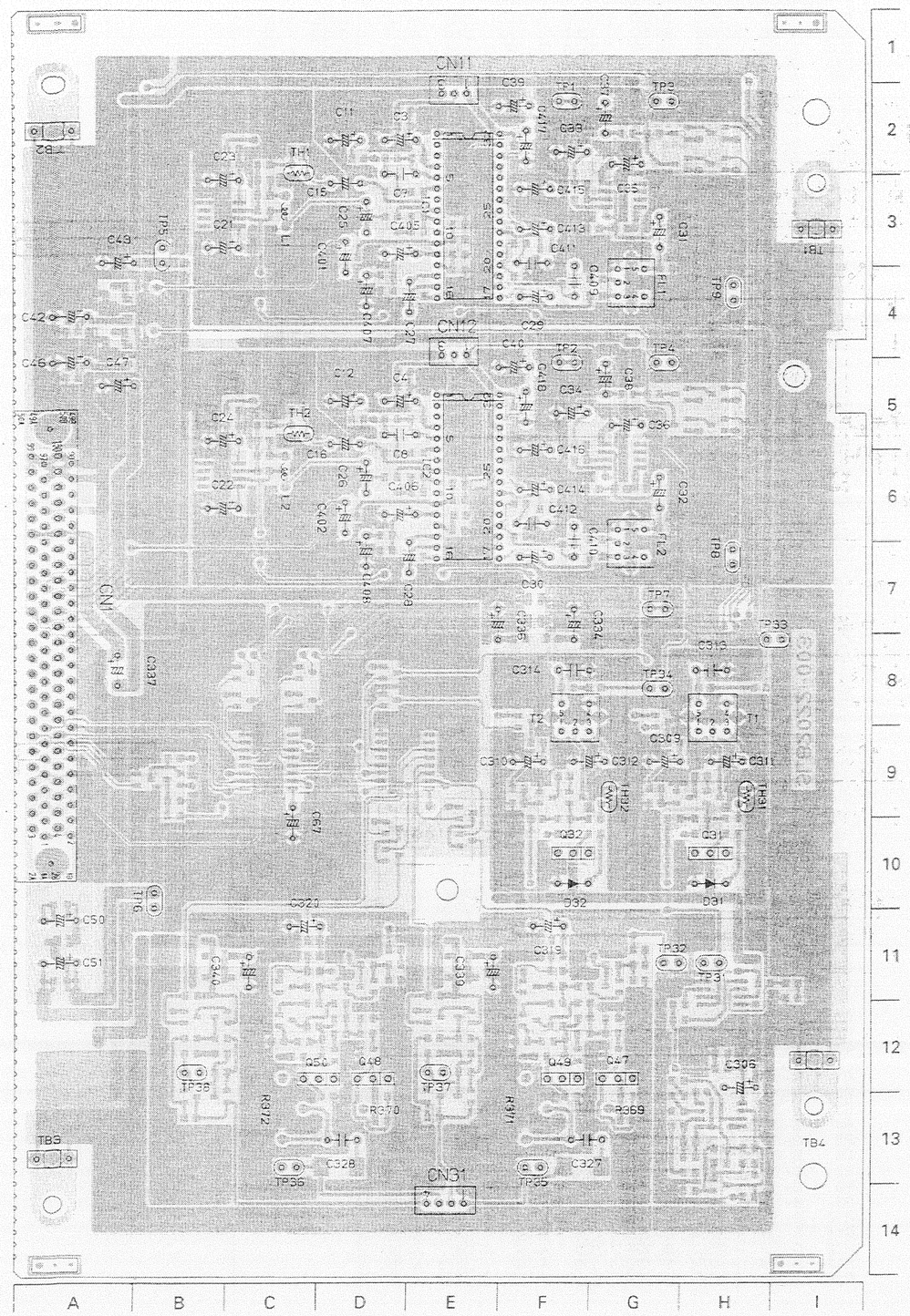

— SIDE B —

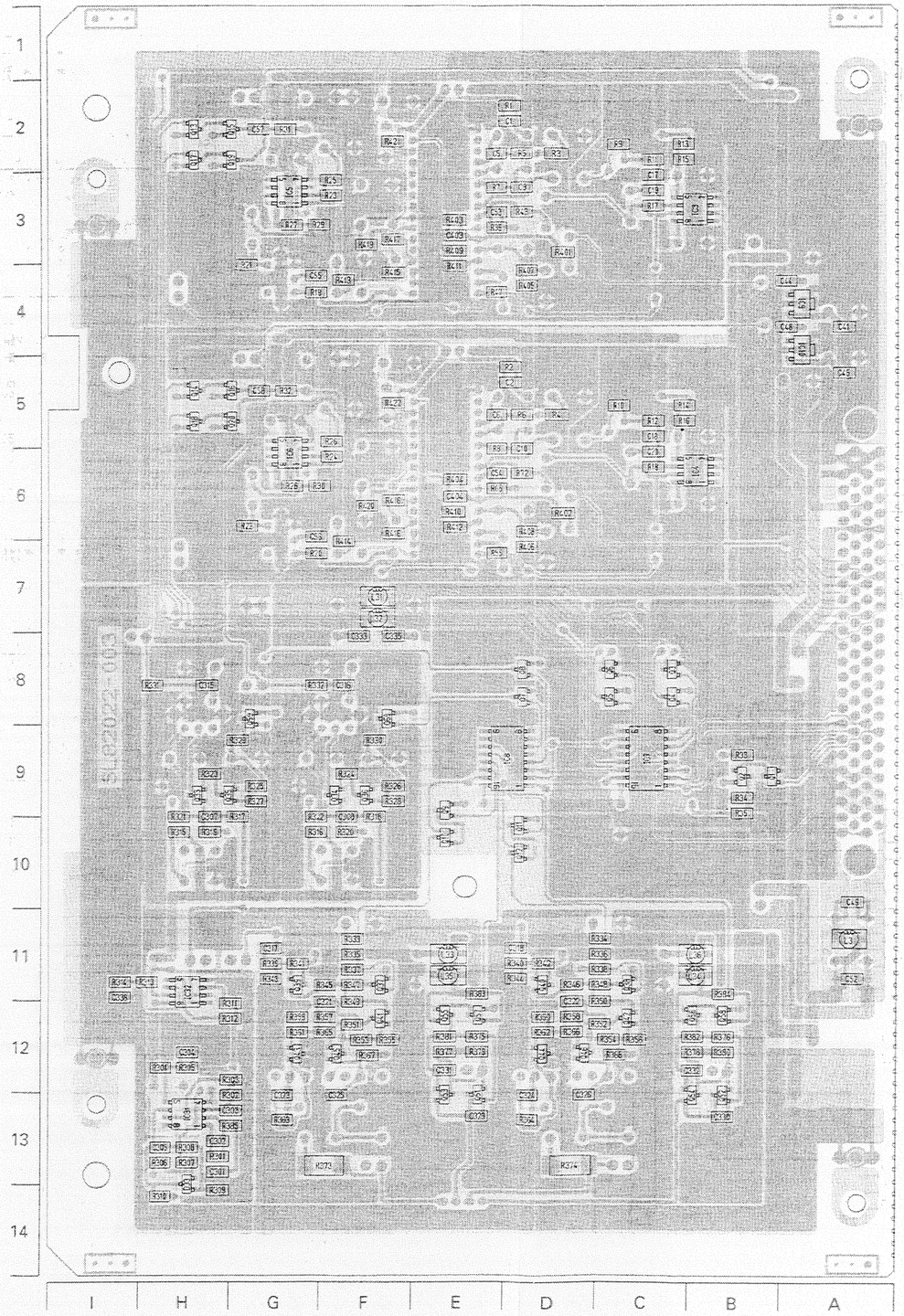

4-73

— SIDE B —

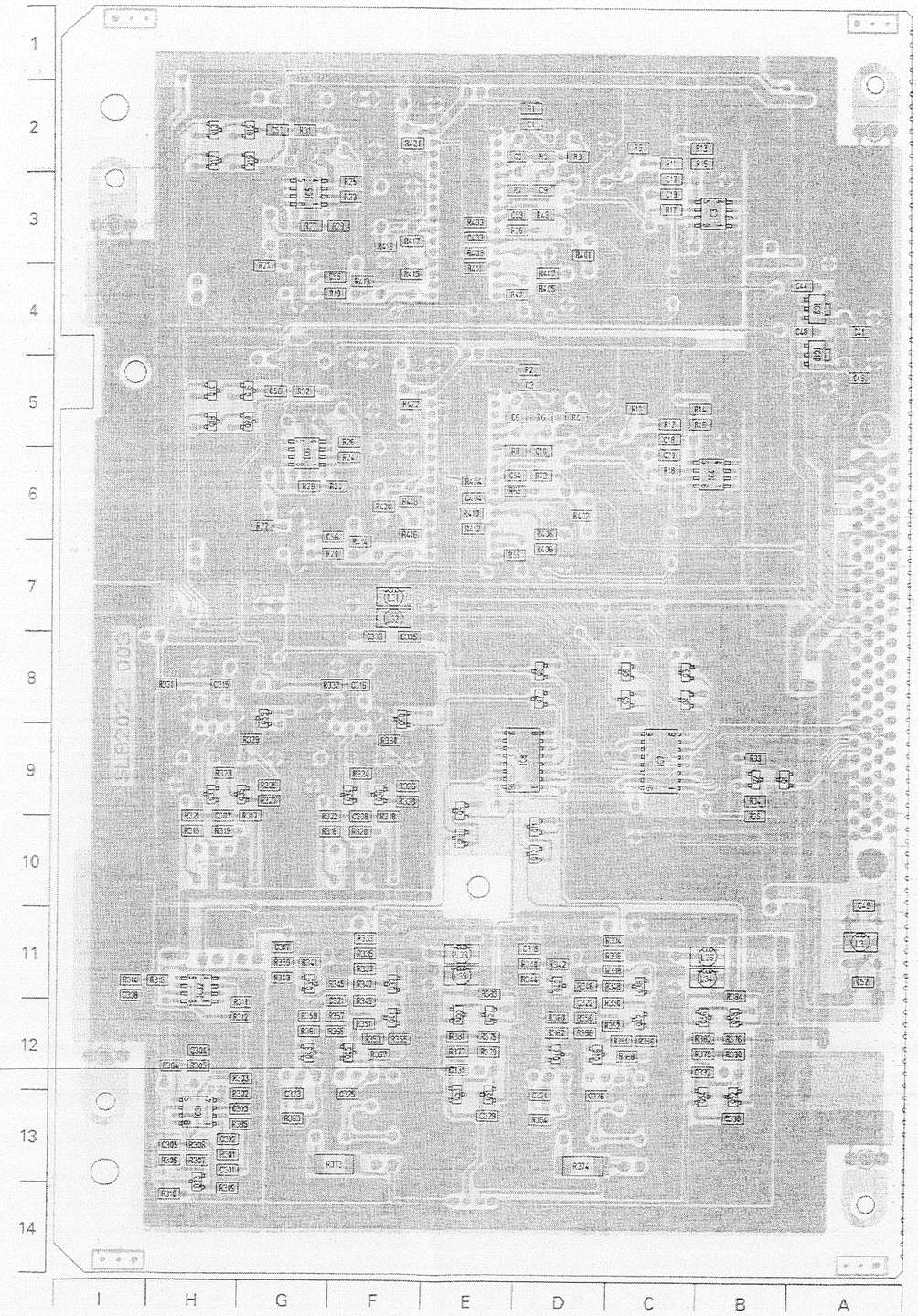

ADDRESS TABLE OF BOARD PARTS

Side — A-1C (Y axis, X axis)

Each address may have an address error by one interval.

IC1	A- 2E	R15	B- 2C	R356	B- 12D	C32	A- 6H	C415	A- 2F
IC2	A- 5E	R16	B- 5C	R357	B- 12G	C33	A- 2G	C416	A- 5F
IC3	B- 3C	R17	B- 3D	R358	B- 12E	C34	A- 5G	C417	A- 2F
IC4	B- 6C	R18	B- 6D	R359	B- 12G	C35	A- 2G	C418	A- 5F
IC5	B- 3G	R19	B- 4G	R360	B- 12E	C36	A- 5G		
IC6	B- 6G	R20	B- 7G	R361	B- 12G	C37	A- 2G	L1	A- 3D
IC7	B- 9D	R21	B- 3H	R362	B- 12E	C38	A- 4G	L2	A- 6D
IC8	B- 9E	R22	B- 6H	R363	B- 13G	C39	A- 2F	L3	B- 11B
IC9	B- 4B	R23	B- 3G	R364	B- 13E	C40	A- 4F	L31	B- 7F
IC10	B- 4B	R24	B- 5G	R365	B- 12G	C41	B- 4B	L32	B- 7F
IC31	B- 13H	R25	B- 2G	R366	B- 12E	C42	A- 4B	L33	B- 11F
IC32	B- 11H	R26	B- 5G	R367	B- 12F	C43	A- 3C	L34	B- 11C
		R27	B- 3G	R368	B- 12D	C44	B- 3C	L35	B- 11F
Q1	B- 9C	R28	B- 6G	R369	A- 13F	C45	B- 4B	L36	B- 11C
Q2	B- 9C	R29	B- 3G	R370	A- 13D	C46	A- 4B		
Q3	B- 8D	R30	B- 6G	R371	A- 12F	C47	A- 5C	TP1	A- 1G
Q4	B- 8D	R31	B- 2G	R372	A- 12D	C48	B- 4C	TP2	A- 4G
Q5	B- 8D	R32	B- 5G	R373	B- 13G	C49	B- 10B	TP3	A- 1H
Q6	B- 8D	R33	B- 9C	R374	B- 13E	C50	A- 11B	TP4	A- 4H
Q7	B- 8E	R34	B- 9C	R375	B- 12E	C51	A- 11B	TP5	A- 3C
Q8	B- 8E	R35	B- 9C	R376	B- 12C	C52	B- 11B	TP6	A- 10C
Q9	B- 9F	R36	B- 3E	R377	B- 12F	C53	B- 3E	TP7	A- 7H
Q10	B- 10F	R43	B- 3E	R378	B- 12C	C54	B- 6E	TP8	A- 6H
Q11	B- 9E	R47	B- 4E	R379	B- 12E	C55	B- 3G	TP9	A- 3H
Q12	B- 10E	R55	B- 7E	R380	B- 12C	C56	B- 6G	TP31	A- 11H
Q13	B- 2H	R65	B- 6E	R381	B- 12F	C57	B- 2G	TP32	A- 11H
Q14	B- 5H	R72	B- 6E	R382	B- 12C	C58	B- 5G	TP33	A- 7I
Q15	B- 2H	R301	B- 13H	R383	B- 11E	C67	A- 9D	TP34	A- 8H
Q16	B- 5H	R302	B- 12H	R384	B- 11C	C301	B- 13H	TP35	A- 13F
Q17	B- 2H	R303	B- 12H	R385	B- 13H	C302	B- 13H	TP36	A- 13D
Q18	B- 5H	R304	B- 12H	R401	B- 3E	C303	B- 13H	TP37	A- 12E
Q19	B- 2H	R305	B- 12H	R402	B- 6E	C304	B- 12H	TP38	A- 12C
Q20	B- 5H	R306	B- 13H	R403	B- 3F	C305	B- 13H		
Q31	A- 10H	R307	B- 13H	R404	B- 6F	C306	A- 12H	FL1	A- 3G
Q32	A- 10G	R308	B- 13H	R405	B- 4E	C307	B- 9H	FL2	A- 6G
Q33	B- 9H	R309	B- 14H	R406	B- 6E	C308	B- 9G		
Q34	B- 9G	R310	B- 14H	R407	B- 3E	C309	A- 9H	T1	A- 8H
Q35	B- 9H	R311	B- 11H	R408	B- 6E	C310	A- 9F	T2	A- 8G
Q36	B- 9F	R312	B- 12H	R409	B- 3F	C311	A- 9H		
Q37	B- 11F	R313	B- 11I	R410	B- 6F	C312	A- 9G	TB1	A- 2I
Q38	B- 11D	R314	B- 11I	R411	B- 3F	C313	A- 8H	TB2	A- 1B
Q39	B- 11G	R315	B- 10H	R412	B- 6F	C314	A- 8G	TB3	A- 14B
Q40	B- 11E	R316	B- 10G	R413	B- 3G	C315	B- 8H	TB4	A- 13I
Q41	B- 12F	R317	B- 9H	R414	B- 6G	C316	B- 8G		
Q42	B- 12D	R318	B- 9F	R415	B- 3F	C317	B- 11G	TH1	A- 2D
Q43	B- 12G	R319	B- 10H	R416	B- 6F	C318	B- 11E	TH2	A- 5D
Q44	B- 12E	R320	B- 10G	R417	B- 3F	C319	A- 11G	TH31	A- 9H
Q45	B- 12G	R321	B- 9H	R418	B- 6F	C320	A- 11D	TH32	A- 9G
Q46	B- 12D	R322	B- 9G	R419	B- 3F	C321	B- 11G		
Q47	A- 12G	R323	B- 9H	R420	B- 6F	C322	B- 11E	CN1	A- 7A
Q48	A- 12E	R324	B- 9G	R421	B- 2F	C323	B- 12G	CN11	A- 1F
Q49	A- 12G	R325	B- 9H	R422	B- 5F	C324	B- 12E	CN12	A- 4F
Q50	A- 12D	R326	B- 9F			C325	B- 12G	CN31	A- 14F
Q51	B- 12E	R327	B- 9H	C1	B- 2E	C326	B- 12D		
Q52	B- 12C	R328	B- 9F	C2	B- 5E	C327	A- 13G		
Q53	B- 12F	R329	B- 9H	C3	A- 2E	C328	A- 13D		
Q54	B- 12C	R330	B- 9F	C4	A- 5E	C329	B- 13E		
Q55	B- 12F	R331	B- 8I	C5	B- 2E	C330	B- 13C		
Q56	B- 12C	R332	B- 8G	C6	B- 5E	C331	B- 12F		
Q57	B- 12E	R333	B- 11G	C7	A- 2E	C332	B- 12C		
Q58	B- 12C	R334	B- 11D	C8	A- 5E	C333	B- 7G		
Q59	B- 8H	R335	B- 11G	C9	B- 2E	C334	A- 7G		
Q60	B- 8F	R336	B- 11D	C10	B- 5E	C335	B- 7F		
		R337	B- 11G	C11	A- 2E	C336	A- 7F		
D31	A- 10H	R338	B- 11D	C12	A- 5E	C337	A- 8B		
D32	A- 10G	R339	B- 11G	C15	A- 2D	C338	B- 11I		
D33	B- 13H	R340	B- 11E	C16	A- 5D	C339	A- 11F		
		R341	B- 11G	C17	B- 2D	C340	A- 11D		
R1	B- 2E	R342	B- 11E	C18	B- 5D	C401	A- 3E		
R2	B- 4E	R343	B- 11G	C19	B- 3D	C402	A- 6E		
R3	B- 2E	R344	B- 11E	C20	B- 5D	C403	B- 3F		
R4	B- 5E	R345	B- 11G	C21	A- 3D	C404	B- 6F		
R5	B- 2E	R346	B- 11E	C22	A- 6D	C405	A- 3E		
R6	B- 5E	R347	B- 11G	C23	A- 2D	C406	A- 6E		
R7	B- 2E	R348	B- 11D	C24	A- 5D	C407	A- 3E		
R8	B- 5E	R349	B- 11G	C25	A- 3E	C408	A- 6E		
R9	B- 2D	R350	B- 11D	C26	A- 5E	C409	A- 4G		
R10	B- 5D	R351	B- 12G	C27	A- 3E	C410	A- 7G		
R11	B- 2D	R352	B- 12D	C28	A- 6E	C411	A- 3F		
R12	B- 5D	R353	B- 12F	C29	A- 4F	C412	A- 6F		
R13	B- 2C	R354	B- 12D	C30	A- 7F	C413	A- 3F		
R14	B- 5C	R355	B- 12F	C31	A- 3H	C414	A- 6F		

4-73

4.38 ANA AUDIO SCHEMATIC DIAGRAMS

— DIAGRAM 1/2 —

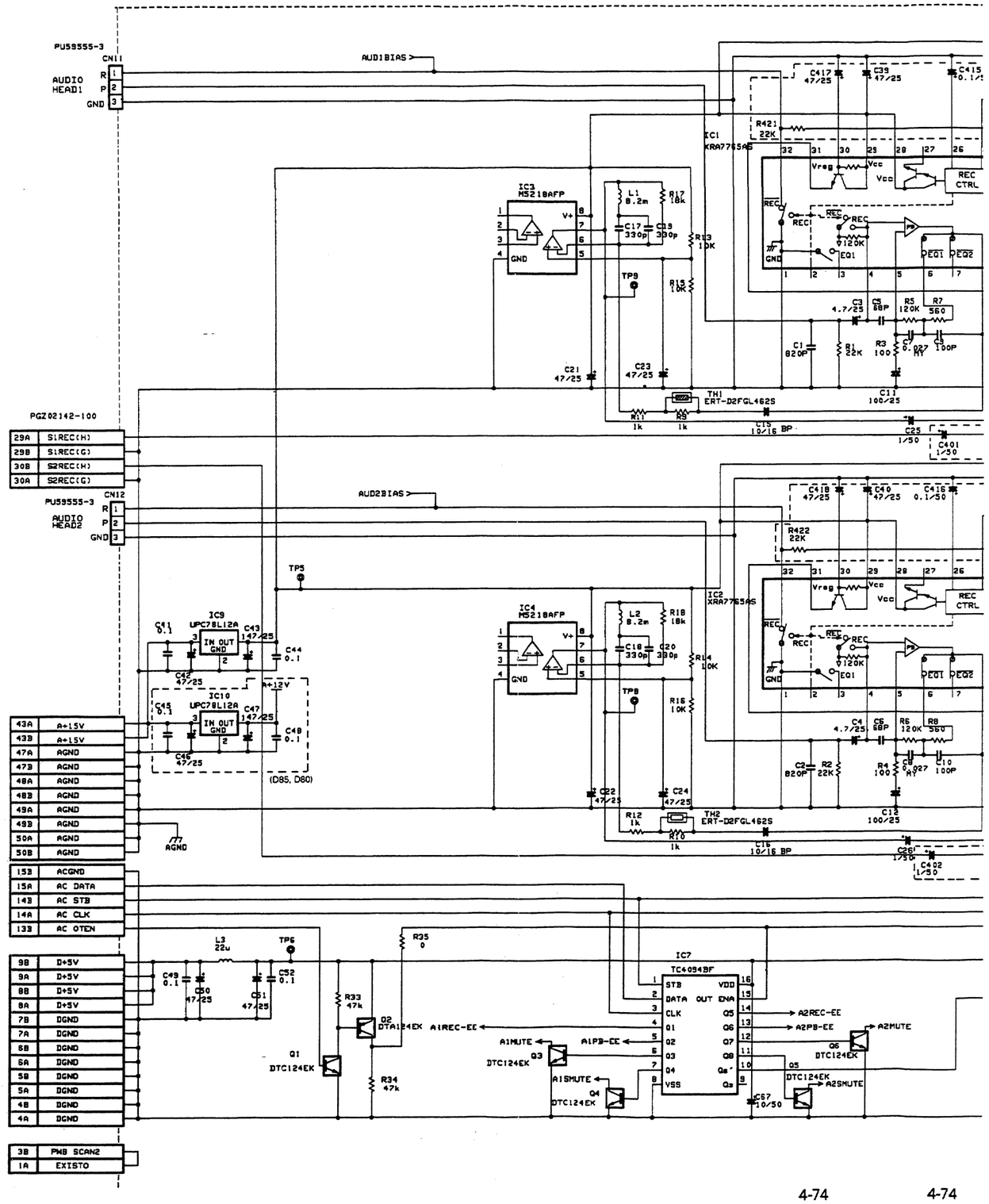

4-74

4-74

4.38 ANA AUDIO SCHEMATIC DIAGRAMS

— DIAGRAM 1/2 —

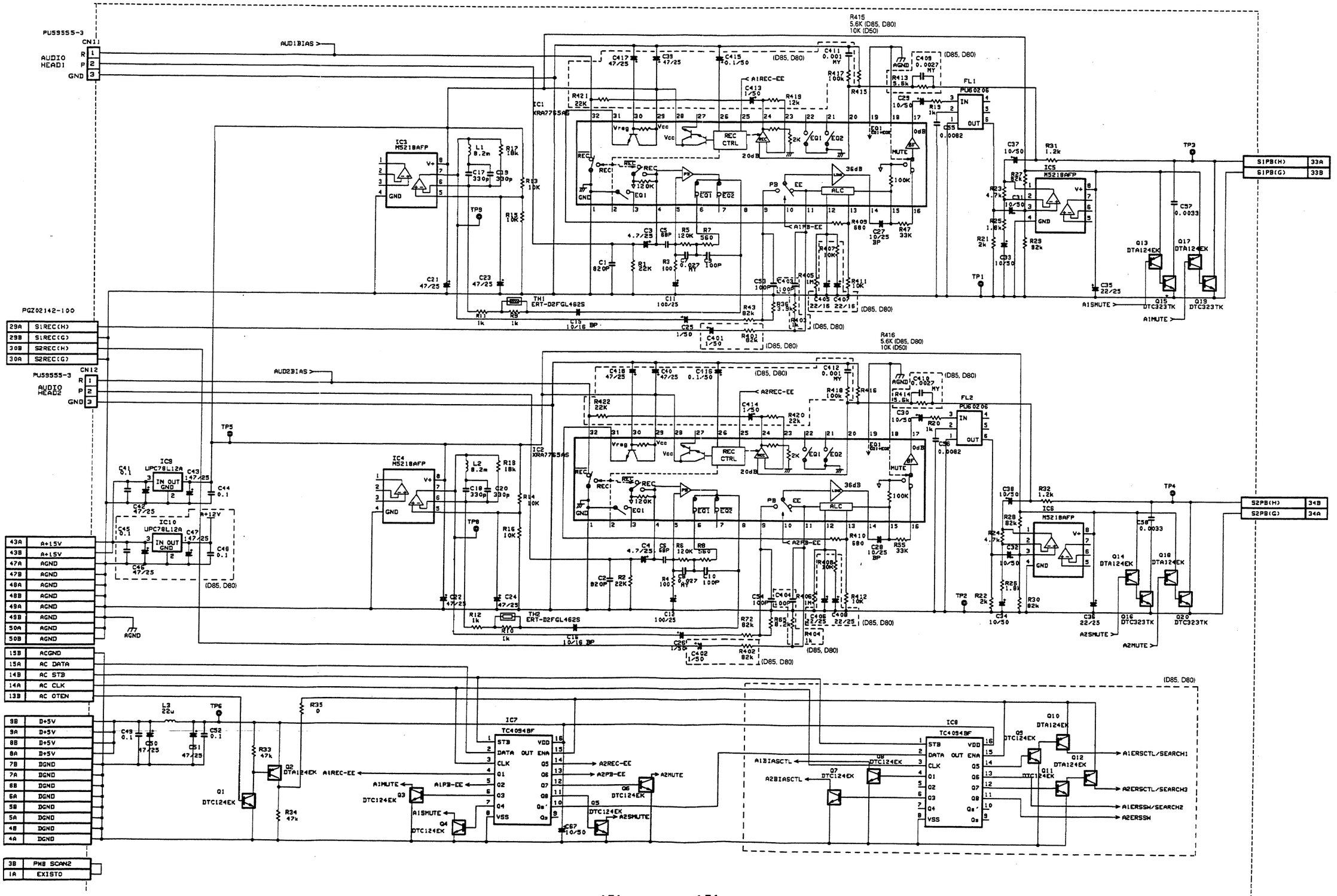

— DIAGRAM 2/2 —

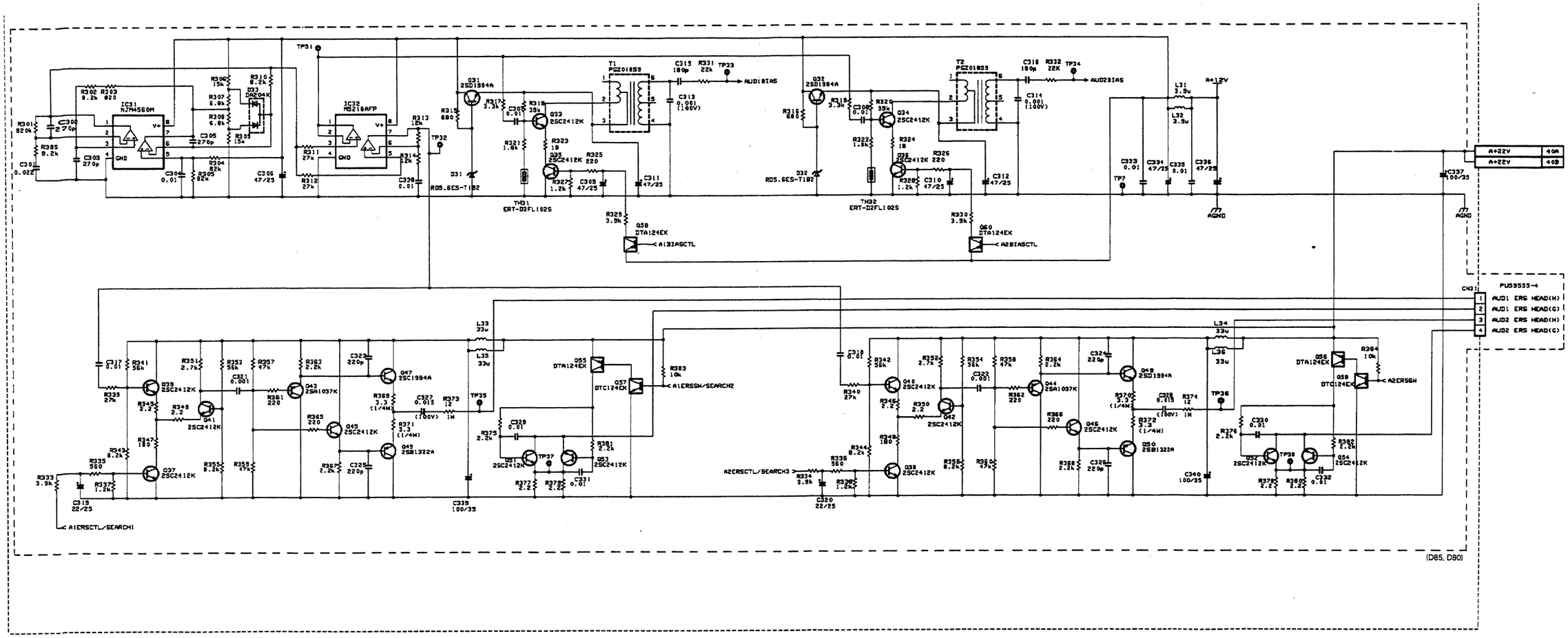
IC31 NJM4560M
IC32 MS218AFP
D33 DA204K
D31 RD5.6ES-T1B2
D32 RD5.6ES-T1B2
TH31 ERT-D2FL102S
TH32 ERT-D2FL102S
T1 PGZ0185S
T2 PGZ0185S
Q31 2SD1984A
Q32 2SD1984A
Q33 2SC2412K
Q34 2SC2412K
Q35 2SC2412K
Q36 2SC2412K
Q58 DTA124EK
Q60 DTA124EK
AUD1BIAS
AUD2BIAS
A1BIASCTL
A2BIASCTL
A+12V
A+22V
AGND
CN3 PUS9555-4
AUD1 ERS HEAD(H)
AUD1 ERS HEAD(G)
AUD2 ERS HEAD(H)
AUD2 ERS HEAD(G)
Q38 2SC2412K
Q39 2SC2412K
Q40 2SC2412K
Q41 2SC2412K
Q42 2SC2412K
Q43 2SA1037K
Q44 2SA1037K
Q45 2SC2412K
Q46 2SC2412K
Q47 2SC1984A
Q48 2SD1984A
Q49 2SD1984A
Q50 2SB1322A
Q45 2SB1322A
Q51 2SC2412K
Q52 2SC2412K
Q53 2SC2412K
Q54 2SC2412K
Q55 DTA124EK
Q56 DTA124EK
Q57 DTC124EK
Q58 DTC124EK
A1ERSSW/SEARCH2
A2ERSSW
A1ERSCTL/SEARCH1
A2ERSCTL/SEARCH3
(D65, D80)

4.39 DIG AUDIO SCHEMATIC DIAGRAMS

— DIAGRAM 1/3 —

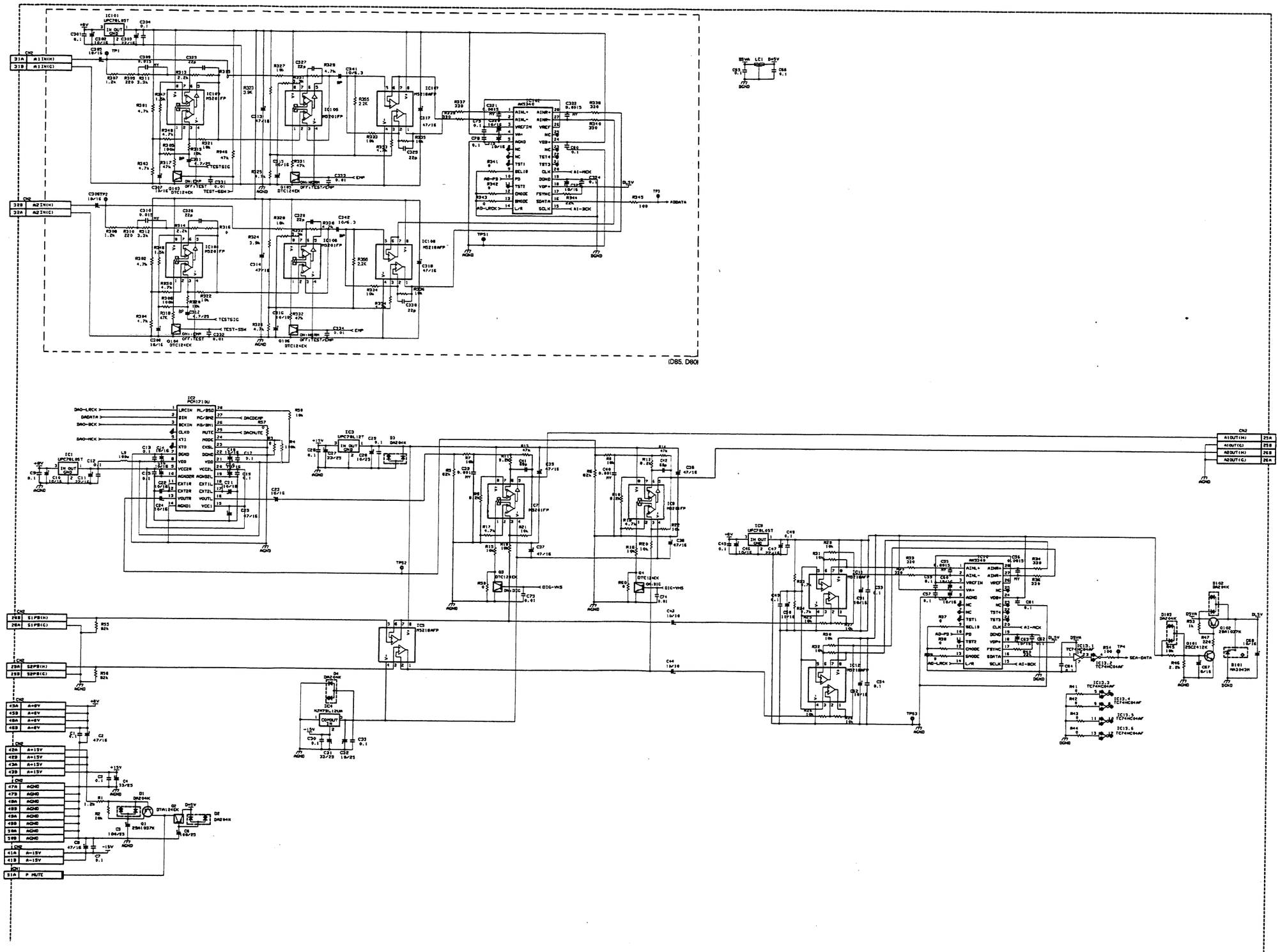

— DIAGRAM 2/3 —

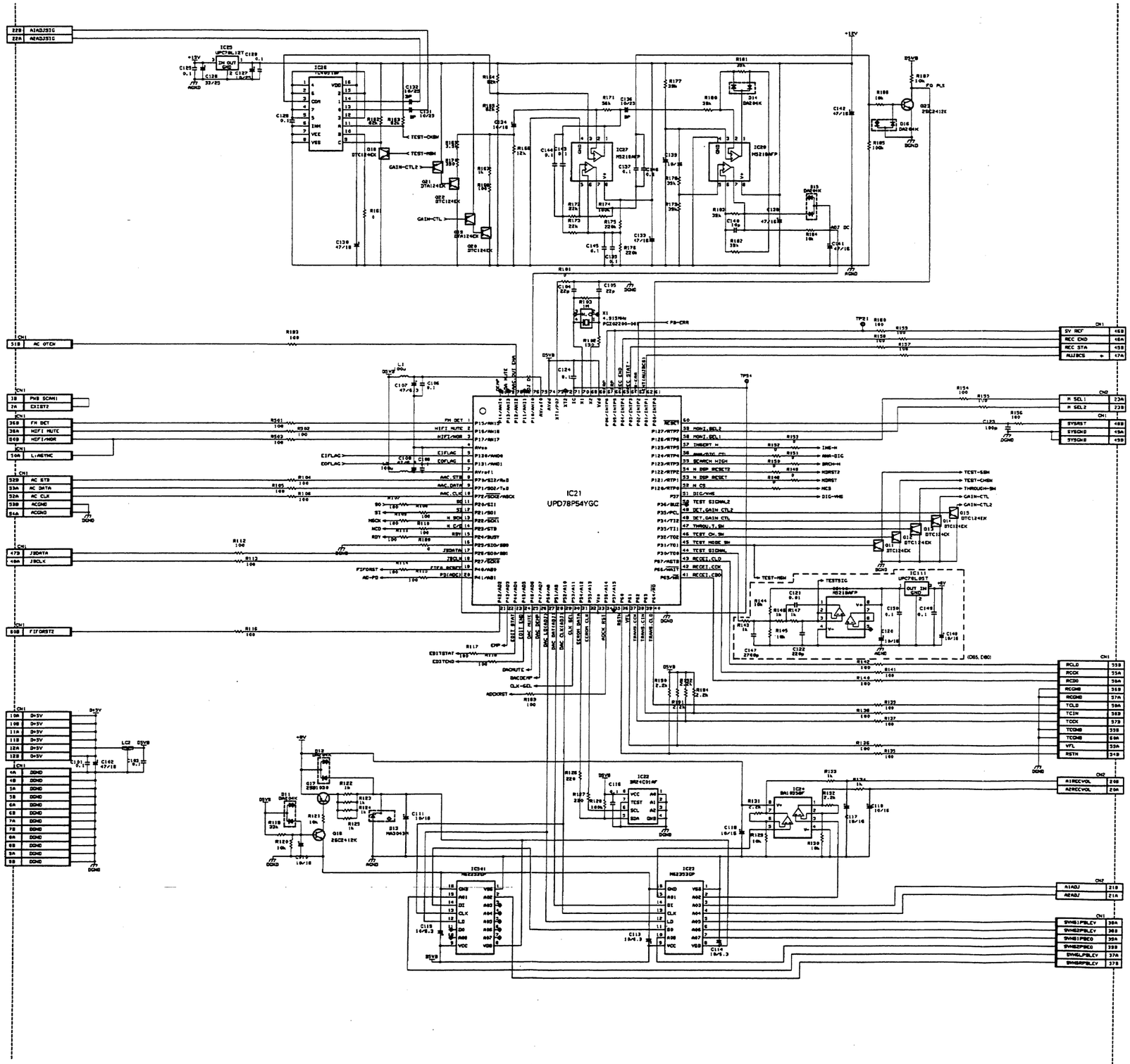
IC21
UPD78P54YGC
IC41
IC42
IC111
IC22
IC24
IC27
IC28
IC29
IC30
IC31
IC32
IC33
IC34
IC35
IC36
IC37
IC38
IC39
IC40
IC43
IC44
IC45
IC46
IC47
IC48
IC49
IC50
IC51
IC52
IC53
IC54
IC55
IC56
IC57
IC58
IC59
IC60
IC61
IC62
IC63
IC64
IC65
IC66
IC67
IC68
IC69
IC70
IC71
IC72
IC73
IC74
IC75
IC76
IC77
IC78
IC79
IC80
IC81
IC82

— DIAGRAM 3/3 —

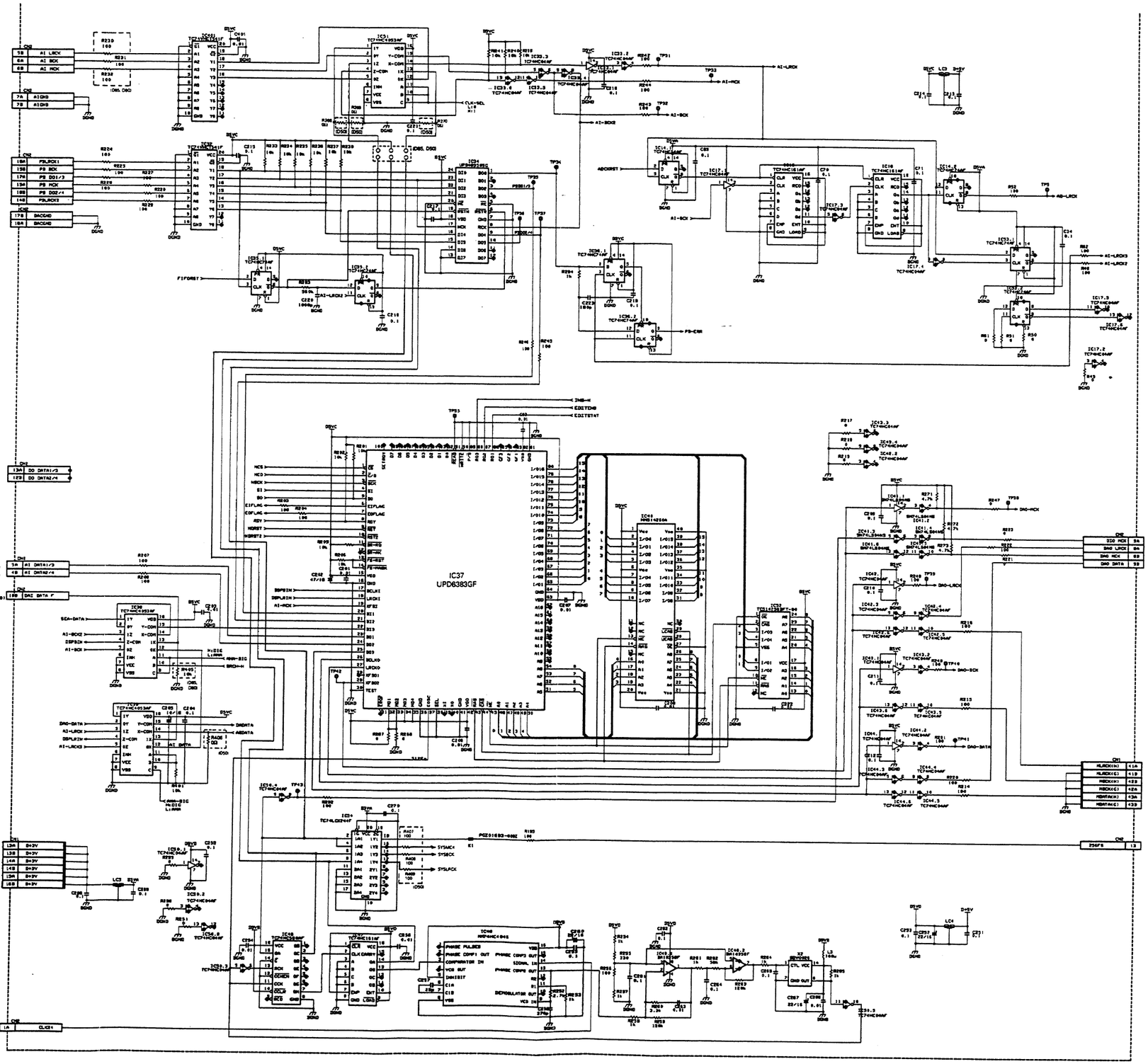

4-78

4.40 DIG AUDIO CIRCUIT BOARD

— SIDE A —

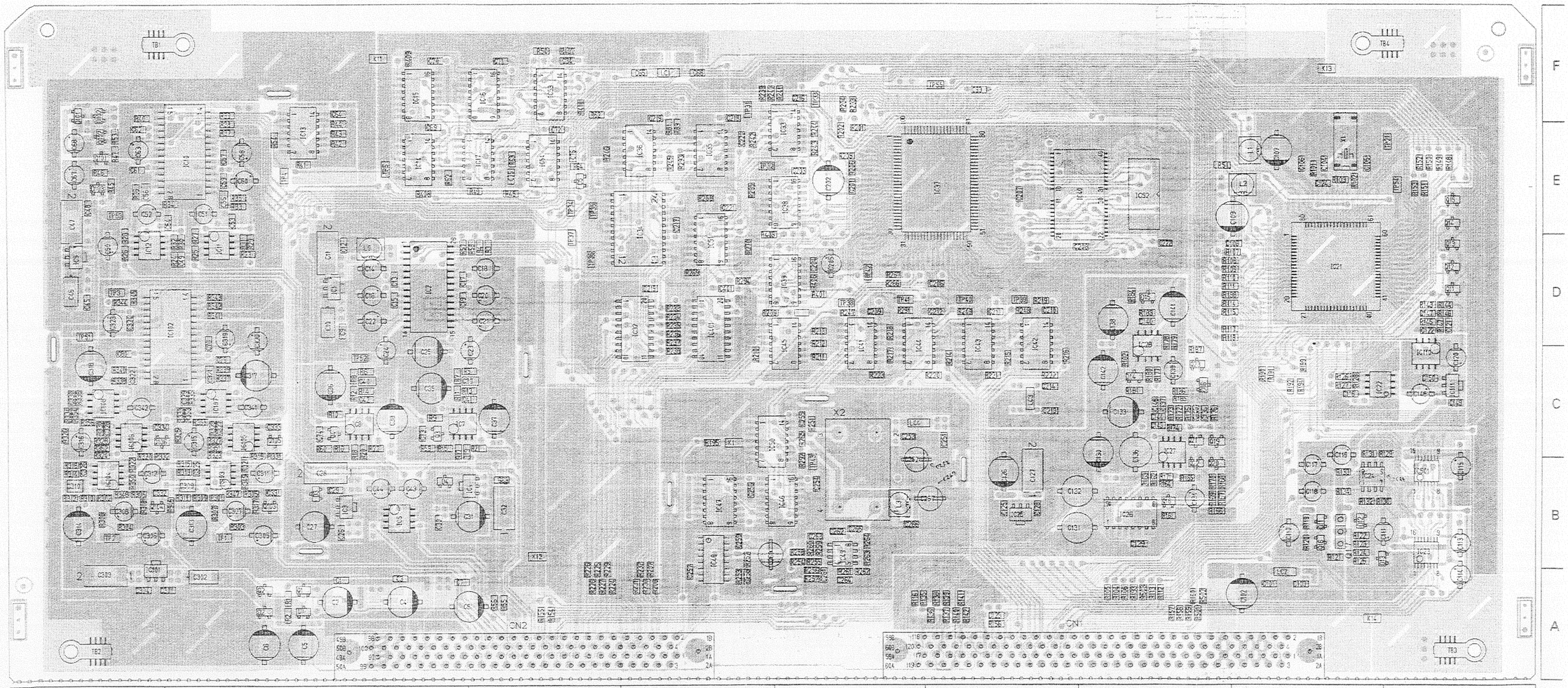

ADDRESS TABLE OF BOARD PARTS

Each address may have an address error by one interval.

A-1C — Side, Y axis, X axis

IC1	A- 8D	IC39	A- 5D	Q4	A- 8C	D101	A- 10F	R28	A- 10E	R59	A- 8C	R128	A- 2D	R159	A- 3B	R190	A- 2D	R231	A- 6B	R263	A- 5B	R315	A- 9C	R347	A- 9C	C11	A- 8E	C42	A- 8C	C74	A- 9C	C128	A- 4C	C209	A- 5D	C267	A- 4C	C328	A- 10C	TP40	A- 4D	TB7	A- 6A
IC2	A- 8E	IC40	A- 4E	Q11	A- 1D	D102	A- 10F	R29	A- 9E	R60	A- 8C	R129	A- 2C	R160	A- 3B	R191	A- 2D	R232	A- 6B	R264	A- 5B	R316	A- 10C	R348	A- 10C	C12	A- 8E	C43	A- 8C	C78	A- 9D	C129	A- 3B	C210	A- 4D	C258	A- 2B	C329	A- 9C	TP41	A- 5D		
IC3	A- 8C	IC41	A- 5D	Q12	A- 1D	D103	A- 10E	R30	A- 9E	R61	A- 7F	R130	A- 2C	R161	A- 3B	R192	A- 2C	R233	A- 6D	R265	A- 5C	R317	A- 9C	R349	A- 9C	C13	A- 8D	C44	A- 8C	C79	A- 9D	C130	A- 3C	C211	A- 4D	C269	A- 2B	C330	A- 10C	TP42	A- 5D	X1	A- 2E
IC4	A- 8C	IC42	A- 4D	Q13	A- 1E			R31	A- 9E	R62	A- 7F	R131	A- 2C	R162	A- 3C	R193	A- 3B	R234	A- 6D	R266	A- 5D	R318	A- 10C	R350	A- 10C	C14	A- 8D	C45	A- 10D	C80	A- 10D	C131	A- 4B	C212	A- 4D	C270	A- 6C	C331	A- 9C	TP43	A- 5C	X2	A- 5C
IC5	A- 8C	IC43	A- 4D	Q14	A- 1E	R1	A- 9B	R32	A- 9E	R101	A- 2E	R132	A- 2C	R163	A- 3C	R194	A- 2C	R235	A- 6D	R267	A- 5D	R319	A- 9C	R351	A- 9C	C15	A- 8D	C46	A- 10D	C93	A- 4F	C132	A- 4C	C213	A- 4C	C301	A- 10B	C332	A- 10C	TP51	A- 10D		
IC7	A- 8C	IC44	A- 5D	Q15	A- 1E	R2	A- 9B	R33	A- 9E	R102	A- 2E	R133	A- 2C	R164	A- 3C	R195	A- 6C	R236	A- 6D	R268	A- 6E	R320	A- 10C	R352	A- 10C	C16	A- 8D	C47	A- 10E	C101	A- 2B	C133	A- 3C	C214	A- 4C	C302	A- 9B	C333	A- 9C	TP52	A- 8D		
IC8	A- 8C	IC46	A- 5C	Q16	A- 2B	R3	A- 7E	R34	A- 9E	R103	A- 2E	R134	A- 2C	R165	A- 3C	R201	A- 5E	R237	A- 6D	R269	A- 6E	R321	A- 9C	R353	A- 9C	C17	A- 8D	C48	A- 10E	C102	A- 2B	C134	A- 3C	C215	A- 6D	C303	A- 10B	C334	A- 10C	TP53	A- 10E		
IC9	A- 10D	IC47	A- 6C	Q17	A- 2B	R4	A- 7E	R35	A- 9E	R104	A- 3B	R135	A- 5B	R166	A- 3B	R202	A- 5E	R238	A- 6D	R270	A- 6E	R322	A- 10C	R354	A- 10C	C18	A- 7D	C49	A- 9D	C103	A- 2B	C135	A- 3C	C216	A- 5F	C304	A- 10B	C341	A- 9C	TP54	A- 1E		
IC10	A- 9E	IC48	A- 6B	Q18	A- 3C	R5	A- 8D	R36	A- 10E	R105	A- 3B	R136	A- 4B	R167	A- 3C	R203	A- 5F	R239	A- 6F	R271	A- 5D	R323	A- 9C	R355	A- 9C	C19	A- 8D	C50	A- 10E	C104	A- 2E	C136	A- 3C	C217	A- 6E	C305	A- 9B	C342	A- 10C	TP55	A- 4F		
IC11	A- 9E	IC49	A- 5B	Q19	A- 3C	R6	A- 8D	R37	A- 9E	R106	A- 3B	R137	A- 4B	R168	A- 3C	R204	A- 5F	R240	A- 6F	R272	A- 5D	R324	A- 10C	R356	A- 10C	C20	A- 7D	C51	A- 9E	C105	A- 2E	C137	A- 3C	C218	A- 6F	C306	A- 10B	C401	A- 6D				
IC12	A- 10E	IC50	A- 6C	Q20	A- 3C	R7	A- 8D	R38	A- 9F	R107	A- 3E	R138	A- 4B	R169	A- 3C	R205	A- 5E	R241	A- 5F	R273	A- 5D	R325	A- 9C	R401	A- 5D	C21	A- 7D	C52	A- 10E	C106	A- 2E	C138	A- 3D	C219	A- 6F	C307	A- 9B			CN1	A- 3A		
IC13	A- 9F	IC51	A- 6E	Q21	A- 3C	R8	A- 8D	R39	A- 9F	R108	A- 3D	R139	A- 4B	R170	A- 3C	R206	A- 5E	R242	A- 6E	R291	A- 5D	R326	A- 10C	R405	A- 6E	C22	A- 8D	C53	A- 9E	C107	A- 2E	C139	A- 3D	C220	A- 6E	C308	A- 10B	L1	A- 2E	CN2	A- 7A		
IC14	A- 8E	IC52	A- 3E	Q22	A- 3C	R9	A- 8C	R40	A- 10F	R109	A- 3D	R140	A- 4B	R171	A- 3C	R207	A- 6B	R243	A- 5E	R292	A- 5C	R327	A- 9C	R406	A- 5D	C23	A- 8D	C54	A- 10E	C108	A- 3E	C140	A- 3D	C221	A- 6E	C309	A- 9C	L2	A- 2E				
IC15	A- 8F	IC53	A- 7F	Q23	A- 3D	R10	A- 8C	R41	A- 9E	R110	A- 3D	R141	A- 4B	R172	A- 3C	R208	A- 6B	R244	A- 5E	R293	A- 6E	R328	A- 10C	R407	A- 6C	C24	A- 8D	C55	A- 9E	C109	A- 3E	C141	A- 3D	C222	A- 3E	C310	A- 10C	L3	A- 5C	K1	A- 6C		
IC16	A- 7F	IC54	A- 6C	Q101	A- 10E	R11	A- 8C	R42	A- 8E	R111	A- 3D	R142	A- 4B	R173	A- 3C	R214	A- 4D	R245	A- 6E	R294	A- 7E	R329	A- 9C	R408	A- 6C	C25	A- 8D	C56	A- 10E	C110	A- 2B	C142	A- 3D	C223	A- 7E	C311	A- 9C	L9	A- 8E	K11	A- 8F		
IC17	A- 7E	IC101	A- 10B	Q102	A- 10E	R12	A- 8C	R43	A- 8E	R112	A- 3B	R143	A- 1D	R174	A- 3C	R215	A- 4D	R246	A- 7E	R295	A- 6C	R330	A- 10C	R409	A- 6C	C26	A- 8B	C57	A- 9E	C111	A- 2B	C143	A- 3C	C251	A- 4C	C312	A- 10C			K12	A- 7B		
IC21	A- 2D	IC102	A- 9D	Q103	A- 9C	R13	A- 8C	R44	A- 8F	R113	A- 3B	R144	A- 1D	R175	A- 3C	R216	A- 4D	R247	A- 5D	R296	A- 6C	R331	A- 9C	R501	A- 3B	C27	A- 9B	C58	A- 9E	C112	A- 1B	C144	A- 3C	C252	A- 5C	C313	A- 9B	TP1	A- 9B	K13	A- 2F		
IC22	A- 2C	IC103	A- 9C	Q104	A- 10C	R14	A- 8C	R45	A- 10E	R114	A- 3D	R145	A- 1D	R176	A- 3C	R217	A- 4D	R248	A- 4D	R297	A- 9C	R332	A- 10C	R502	A- 3B	C28	A- 8C	C59	A- 9E	C113	A- 1B	C145	A- 3C	C253	A- 5C	C314	A- 10B	TP2	A- 10B	K14	A- 2B		
IC23	A- 1B	IC104	A- 10C	Q105	A- 9C	R15	A- 8C	R46	A- 10E	R115	A- 3D	R146	A- 1D	R177	A- 3C	R218	A- 4D	R249	A- 4D	R302	A- 10C	R333	A- 9C	R503	A- 3B	C29	A- 8C	C60	A- 9E	C114	A- 1B	C146	A- 3C	C254	A- 5C	C315	A- 9C	TP3	A- 10D				
IC24	A- 2C	IC105	A- 9C	Q106	A- 10C	R16	A- 8C	R47	A- 10E	R116	A- 5B	R147	A- 1D	R178	A- 3D	R219	A- 4D	R251	A- 5C	R303	A- 9B	R334	A- 10C	R946	A- 9C	C30	A- 8B	C61	A- 10E	C115	A- 1C	C147	A- 1D	C255	A- 5C	C316	A- 10C	TP4	A- 9E	LC1	A- 6F		
IC25	A- 4B	IC106	A- 10C			R17	A- 8C	R48	A- 7F	R117	A- 3D	R148	A- 1E	R179	A- 3D	R220	A- 4D	R252	A- 6B	R304	A- 10B	R335	A- 9C			C31	A- 8B	C62	A- 10E	C116	A- 2C	C148	A- 1C	C256	A- 6C	C317	A- 9D	TP5	A- 8E	LC2	A- 2B		
IC26	A- 3B	IC107	A- 9C	D1	A- 9B	R18	A- 8C	R49	A- 7E	R118	A- 3D	R149	A- 1E	R180	A- 3D	R221	A- 5D	R253	A- 6B	R305	A- 9C	R336	A- 10C	C1	A- 8B	C32	A- 7C	C63	A- 10E	C117	A- 2C	C149	A- 1C	C257	A- 6B	C318	A- 10D	TP21	A- 1E	LC3	A- 4C		
IC27	A- 3C	IC108	A- 10C	D2	A- 9B	R19	A- 8C	R50	A- 7F	R119	A- 2B	R150	A- 1E	R181	A- 3C	R222	A- 4D	R254	A- 5B	R306	A- 10C	R337	A- 9D	C2	A- 8B	C33	A- 7C	C64	A- 8F	C118	A- 2C	C150	A- 1D	C258	A- 6B	C319	A- 9D	TP31	A- 6F	LC4	A- 5C		
IC28	A- 3D	IC110	A- 1D	D3	A- 9D	R20	A- 8C	R51	A- 7F	R120	A- 2B	R151	A- 1E	R182	A- 3D	R223	A- 5D	R255	A- 5B	R307	A- 9B	R338	A- 10D	C3	A- 8B	C34	A- 7F	C65	A- 6F	C119	A- 2C	C201	A- 5E	C259	A- 6B	C320	A- 9D	TP32	A- 6E	LC5	A- 2B		
IC32	A- 6D	IC111	A- 1C	D4	A- 8C	R21	A- 7C	R52	A- 8E	R121	A- 2B	R152	A- 1E	R183	A- 3D	R224	A- 7B	R256	A- 5B	R308	A- 10B	R339	A- 9D	C4	A- 8B	C35	A- 8C	C66	A- 6F	C120	A- 1D	C202	A- 5E	C260	A- 6B	C321	A- 9D	TP33	A- 5F				
IC33	A- 5F	IC401	A- 6D	D11	A- 2B	R22	A- 8C	R53	A- 10E	R122	A- 2B	R153	A- 1E	R184	A- 3D	R225	A- 7B	R257	A- 5B	R309	A- 9C	R340	A- 10D	C5	A- 9A	C36	A- 8C	C67	A- 10E	C121	A- 1D	C203	A- 5E	C261	A- 5B	C322	A- 10D	TP34	A- 7E	TB1	A- 9F		
IC34	A- 6E	IC501	A- 1C	D12	A- 2B	R23	A- 9E	R54	A- 9E	R123	A- 2B	R154	A- 7B	R185	A- 3C	R226	A- 7B	R258	A- 5B	R310	A- 10C	R341	A- 9D	C6	A- 9A	C37	A- 7C	C68	A- 10E	C122	A- 1D	C204	A- 5D	C262	A- 5B	C323	A- 10D	TP35	A- 7E	TB2	A- 10A		
IC35	A- 6E			D13	A- 2B	R24	A- 9D	R55	A- 7B	R124	A- 2B	R155	A- 7B	R186	A- 3C	R227	A- 7B	R259	A- 5B	R311	A- 9C	R342	A- 9D	C7	A- 8B	C38	A- 8C	C69	A- 8F	C123	A- 4B	C205	A- 5D	C263	A- 5B	C324	A- 10D	TP36	A- 7D	TB3	A- 1A		
IC36	A- 6E	Q1	A- 9B	D14	A- 3D	R25	A- 9E	R56	A- 7B	R125	A- 2B	R156	A- 4B	R187	A- 3D	R228	A- 7B	R260	A- 5B	R312	A- 10C	R343	A- 9D	C8	A- 8B	C39	A- 8D	C70	A- 8F	C124	A- 2E	C125	A- 4C	C206	A- 4D	C325	A- 9C	TP37	A- 7E	TB4	A- 2F		
IC37	A- 4E	Q2	A- 9B	D15	A- 3D	R26	A- 10E	R57	A- 8E	R126	A- 2D	R157	A- 3B	R188	A- 3D	R229	A- 7B	R261	A- 5B	R313	A- 9C	R344	A- 10D	C9	A- 8D	C40	A- 8D	C71	A- 7F	C126	A- 4C	C207	A- 4E	C326	A- 10C	TP38	A- 5D	TB5	A- 10F		
IC38	A- 5E	Q3	A- 8C	D16	A- 3C	R27	A- 9E	R58	A- 8E	R127	A- 2C	R158	A- 3B	R189	A- 2D	R230	A- 6B	R262	A- 5B	R314	A- 10C	R345	A- 10D	C10	A- 8D	C41	A- 8C	C73	A- 8C	C127	A- 4C	C208	A- 3E	C266	A- 5B	C327	A- 9C	TP39	A- 4D	TB6	A- 1F		

4-79

4.41 AUDIO I/O SCHEMATIC DIAGRAMS

— DIAGRAM 1/2 —

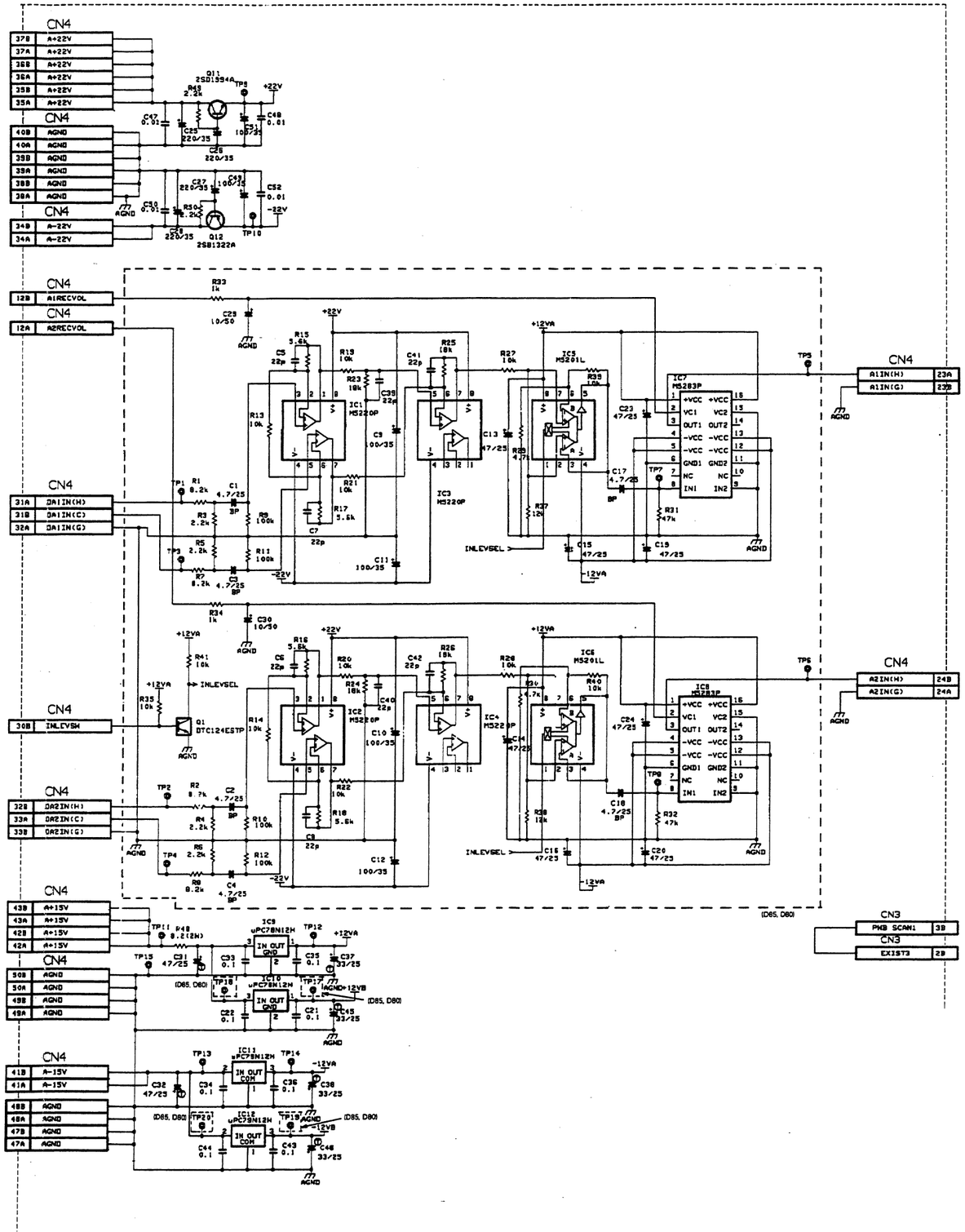

4-80

— DIAGRAM 2/2 —

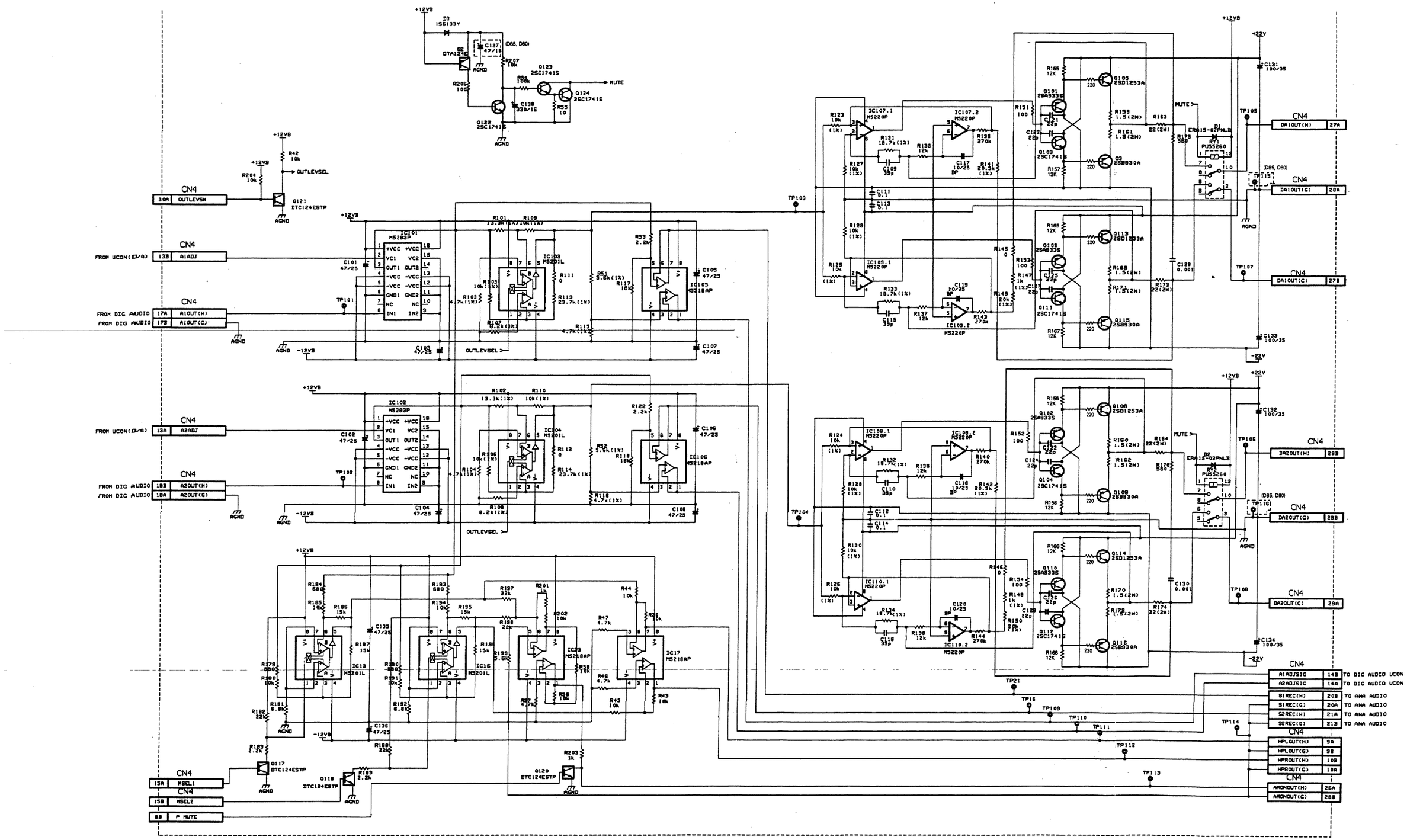

CN4
OUTLEVSW
FROM UCON(D/A)
A1ADJ
FROM DIG AUDIO
A1OUT(H)
A1OUT(G)
A2ADJ
A2OUT(H)
A2OUT(G)
MSEL1
MSEL2
P MUTE
DA1OUT(H)
DA1OUT(G)
DA2OUT(H)
DA2OUT(G)
DA2OUT(C)
A1ADJSIG
A2ADJSIG
S1REC(H)
S1REC(G)
S2REC(H)
S2REC(G)
HPLOUT(H)
HPLOUT(G)
HPROUT(H)
HPROUT(G)
AMONOUT(H)
AMONOUT(G)
TO DIG AUDIO UCON
TO ANA AUDIO
MUTE
OUTLEVSEL
AGND

4.42 AUDIO I/O CIRCUIT BOARD

— SIDE A —

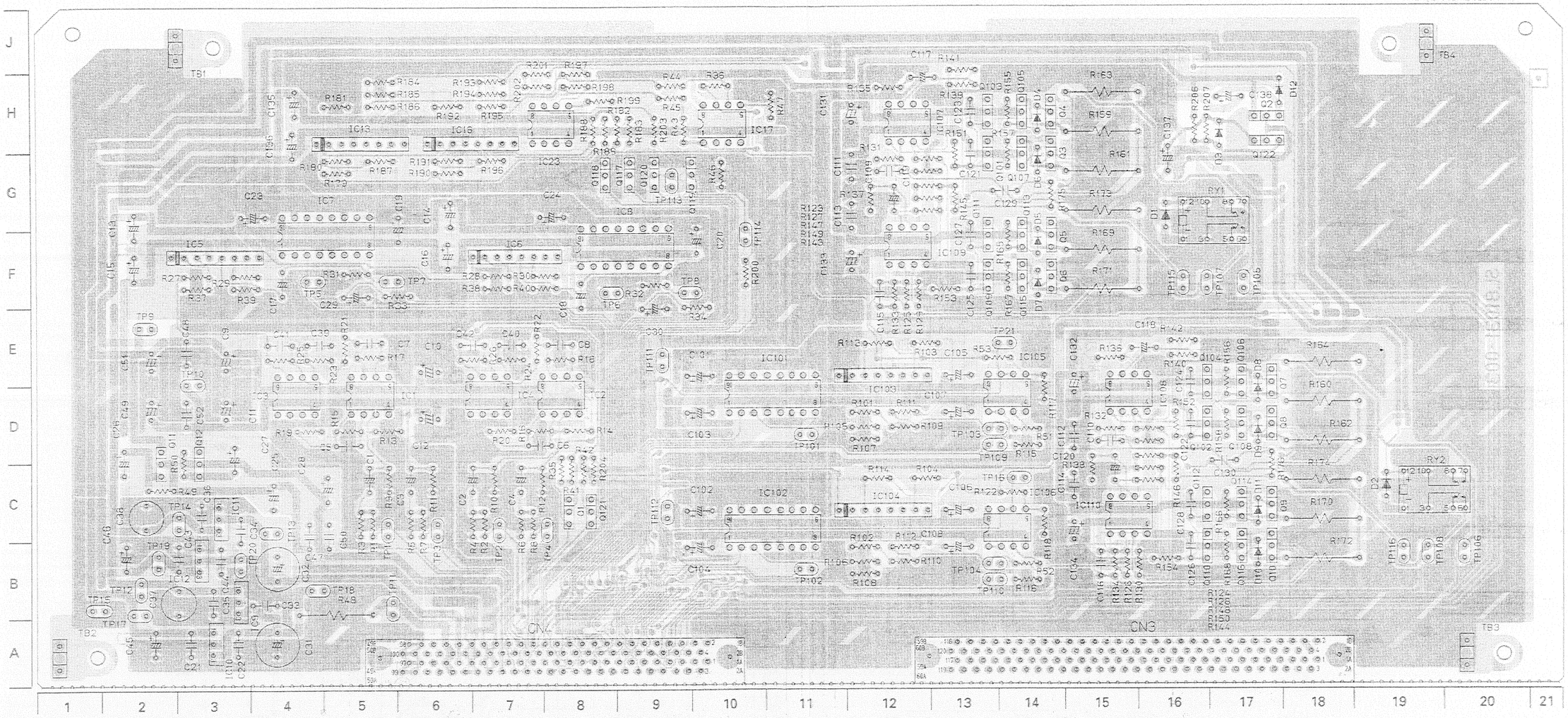

ADDRESS TABLE OF BOARD PARTS

Side — A-1C — Y axis / X axis

Each address may have an address error by one interval.

IC1	A- 5E	IC108	A- 15E	Q108	A- 17E	D8	A- 17E	R18	A- 8E	R41	A- 8D	R111	A- 13E	R137	A- 12G	R160	A- 18E	R185	A- 5H	C1	A- 5D	C24	A- 7G	C47	A- 4C	C118	A- 16E	TP2	A- 7C	TP104	A- 14C
IC2	A- 7E	IC109	A- 12F	Q109	A- 14F	D9	A- 17E	R19	A- 4E	R42	A- 8D	R112	A- 13C	R138	A- 15D	R161	A- 16H	R186	A- 5H	C2	A- 6D	C25	A- 4D	C48	A- 2E	C119	A- 12G	TP3	A- 6C	TP105	A- 17F
IC3	A- 4E	IC110	A- 15C	Q110	A- 17C	D10	A- 17C	R20	A- 7E	R43	A- 9H	R113	A- 12E	R139	A- 13J	R162	A- 19D	R187	A- 5H	C3	A- 6D	C26	A- 2D	C49	A- 2E	C120	A- 15D	TP4	A- 7C	TP106	A- 20C
IC4	A- 6E			Q111	A- 14G	D11	A- 17D	R21	A- 5F	R44	A- 9J	R114	A- 12D	R140	A- 16E	R163	A- 16H	R188	A- 8H	C4	A- 7D	C27	A- 3D	C50	A- 4C	C121	A- 13H	TP5	A- 4F	TP107	A- 17F
IC5	A- 2G	Q1	A- 8D	Q112	A- 17D	D12	A- 18J	R22	A- 7F	R45	A- 9H	R115	A- 14D	R141	A- 13J	R164	A- 19E	R189	A- 8H	C5	A- 5D	C28	A- 4D	C51	A- 2E	C122	A- 16D	TP6	A- 8F	TP108	A- 20C
IC6	A- 6G	Q2	A- 17H	Q113	A- 14G			R23	A- 4E	R46	A- 10G	R116	A- 14C	R142	A- 16F	R165	A- 14G	R190	A- 6H	C6	A- 7D	C29	A- 5F	C52	A- 2E	C123	A- 13H	TP7	A- 5F	TP109	A- 14D
IC7	A- 4G	Q3	A- 14H	Q114	A- 17D	R1	A- 5D	R24	A- 7E	R47	A- 11H	R117	A- 14E	R143	A- 13G	R166	A- 17D	R191	A- 6H	C7	A- 5F	C30	A- 9F	C101	A- 9E	C124	A- 16E	TP8	A- 9F	TP110	A- 14C
IC8	A- 8F	Q4	A- 14H	Q115	A- 14F	R2	A- 7D	R25	A- 4E	R48	A- 5B	R118	A- 14D	R144	A- 16D	R167	A- 14F	R192	A- 6H	C8	A- 8E	C31	A- 4B	C102	A- 9D	C125	A- 13F	TP9	A- 2F	TP111	A- 9E
IC9	A- 3C	Q5	A- 14G	Q116	A- 17C	R3	A- 5C	R26	A- 6E	R49	A- 2D	R122	A- 14D	R145	A- 13G	R168	A- 17C	R193	A- 7J	C9	A- 3E	C32	A- 4C	C103	A- 9E	C126	A- 16C	TP10	A- 2E	TP112	A- 9D
IC10	A- 3B	Q6	A- 14F	Q117	A- 9H	R4	A- 6C	R27	A- 2F	R50	A- 2D	R123	A- 13H	R146	A- 16D	R169	A- 15G	R194	A- 7H	C10	A- 6E	C33	A- 3B	C104	A- 9C	C127	A- 13G	TP11	A- 5B	TP113	A- 9H
IC11	A- 3D	Q7	A- 17E	Q118	A- 8H	R5	A- 6D	R28	A- 7F	R51	A- 14E	R124	A- 16E	R147	A- 13G	R170	A- 18C	R195	A- 7H	C11	A- 3E	C34	A- 3C	C105	A- 13E	C128	A- 16C	TP12	A- 2C	TP114	A- 10G
IC12	A- 3C	Q8	A- 17E	Q119	A- 9H	R6	A- 7D	R29	A- 3F	R52	A- 14C	R125	A- 12F	R148	A- 16D	R171	A- 16F	R196	A- 7H	C12	A- 6E	C35	A- 3C	C106	A- 13D	C129	A- 14G	TP13	A- 4C	TP115	A- 16F
IC13	A- 4H	Q9	A- 17D	Q120	A- 9H	R7	A- 6D	R30	A- 7F	R53	A- 14E	R126	A- 15C	R149	A- 13G	R172	A- 19C	R197	A- 8J	C13	A- 2G	C36	A- 3C	C107	A- 13E	C130	A- 17D	TP14	A- 2C	TP116	A- 19C
IC16	A- 6H	Q10	A- 17C	Q121	A- 8D	R8	A- 7D	R31	A- 5F	R101	A- 12E	R127	A- 13H	R150	A- 16D	R173	A- 16G	R198	A- 8J	C14	A- 6G	C37	A- 2C	C108	A- 13C	C131	A- 12H	TP15	A- 1B		
IC17	A- 10H	Q11	A- 2D	Q122	A- 17H	R9	A- 5D	R32	A- 9F	R102	A- 12C	R128	A- 16D	R151	A- 13H	R174	A- 19D	R199	A- 8H	C15	A- 2G	C38	A- 2D	C109	A- 12H	C132	A- 15E	TP16	A- 14D	RY1	A- 16G
IC23	A- 7H	Q12	A- 3D			R10	A- 7D	R33	A- 6F	R103	A- 12E	R129	A- 13F	R152	A- 16D	R175	A- 14G	R200	A- 10F	C16	A- 6G	C39	A- 4E	C110	A- 15D	C133	A- 12G	TP17	A- 2B	RY2	A- 19D
IC101	A- 10E	Q101	A- 14H	D1	A- 16G	R11	A- 6D	R34	A- 10F	R104	A- 12D	R130	A- 16C	R153	A- 13F	R176	A- 17D	R201	A- 7J	C17	A- 4F	C40	A- 7E	C111	A- 12G	C134	A- 15C	TP18	A- 4C		
IC102	A- 10C	Q102	A- 17E	D2	A- 19D	R12	A- 7D	R35	A- 8D	R105	A- 12E	R131	A- 12H	R154	A- 16C	R177	A- 4H	R202	A- 7J	C18	A- 8F	C41	A- 4E	C112	A- 15D	C135	A- 4J	TP19	A- 2C	TB1	A- 3J
IC103	A- 11E	Q103	A- 14H	D3	A- 17H	R13	A- 5E	R36	A- 10J	R106	A- 12C	R132	A- 15E	R155	A- 14H	R180	A- 5H	R203	A- 9H	C19	A- 5G	C42	A- 7E	C113	A- 12G	C136	A- 4H	TP20	A- 3C	TB2	A- 1B
IC104	A- 11D	Q104	A- 17E	D4	A- 14H	R14	A- 8E	R37	A- 2F	R107	A- 12D	R133	A- 12F	R156	A- 17E	R181	A- 4H	R204	A- 8D	C20	A- 10G	C43	A- 2C	C114	A- 15D	C137	A- 16H	TP21	A- 14E	TB3	A- 21B
IC105	A- 14E	Q105	A- 14H	D5	A- 14G	R15	A- 5E	R38	A- 7F	R108	A- 12C	R134	A- 15C	R157	A- 14H	R182	A- 8H	R206	A- 16H	C21	A- 3B	C44	A- 3C	C115	A- 12F	C138	A- 17H	TP101	A- 11D	TB4	A- 19J
IC106	A- 14C	Q106	A- 17E	D6	A- 14H	R16	A- 7E	R39	A- 3F	R109	A- 12E	R135	A- 12J	R158	A- 17E	R183	A- 9H	R207	A- 17H	C22	A- 3B	C45	A- 2B	C116	A- 15C			TP102	A- 11C		
IC107	A- 12H	Q107	A- 14H	D7	A- 14F	R17	A- 5E	R40	A- 7F	R110	A- 12C	R136	A- 15E	R159	A- 15H	R184	A- 5J			C23	A- 3G	C46	A- 2C	C117	A- 12J	TP1	A- 5C	TP103	A- 14E	CN3	A- 16A
																														CN4	A- 8A

4-82

4.43 M-CTL/SERVO SCHEMATIC DIAGRAMS

— DIAGRAM 1/2 —

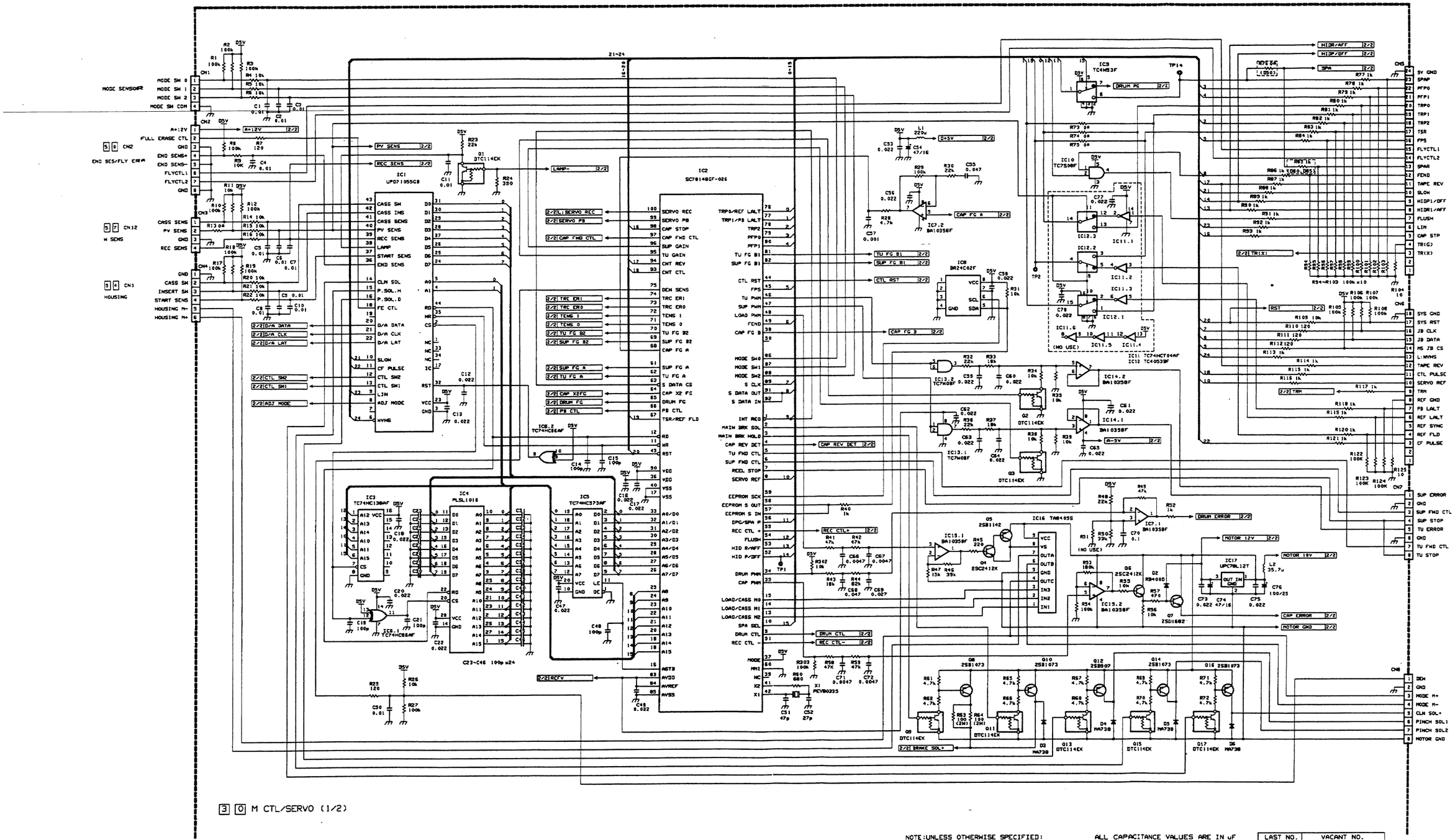

3 0 M CTL/SERVO (1/2)

NOTE:UNLESS OTHERWISE SPECIFIED:
ALL RESISTANCE VALUES ARE IN OHMS.(1/10W)
ALL INDUCTANCE VALUES ARE IN H.

ALL CAPACITANCE VALUES ARE IN uF
ELECTROLYTIC
NON-POLARIZED
CERAMIC

LAST NO.	VACANT NO.
IC	42
Q	29
D	14
R	306
C	175
L	12
TP	14
CN	17

4-83

— DIAGRAM 2/2 —

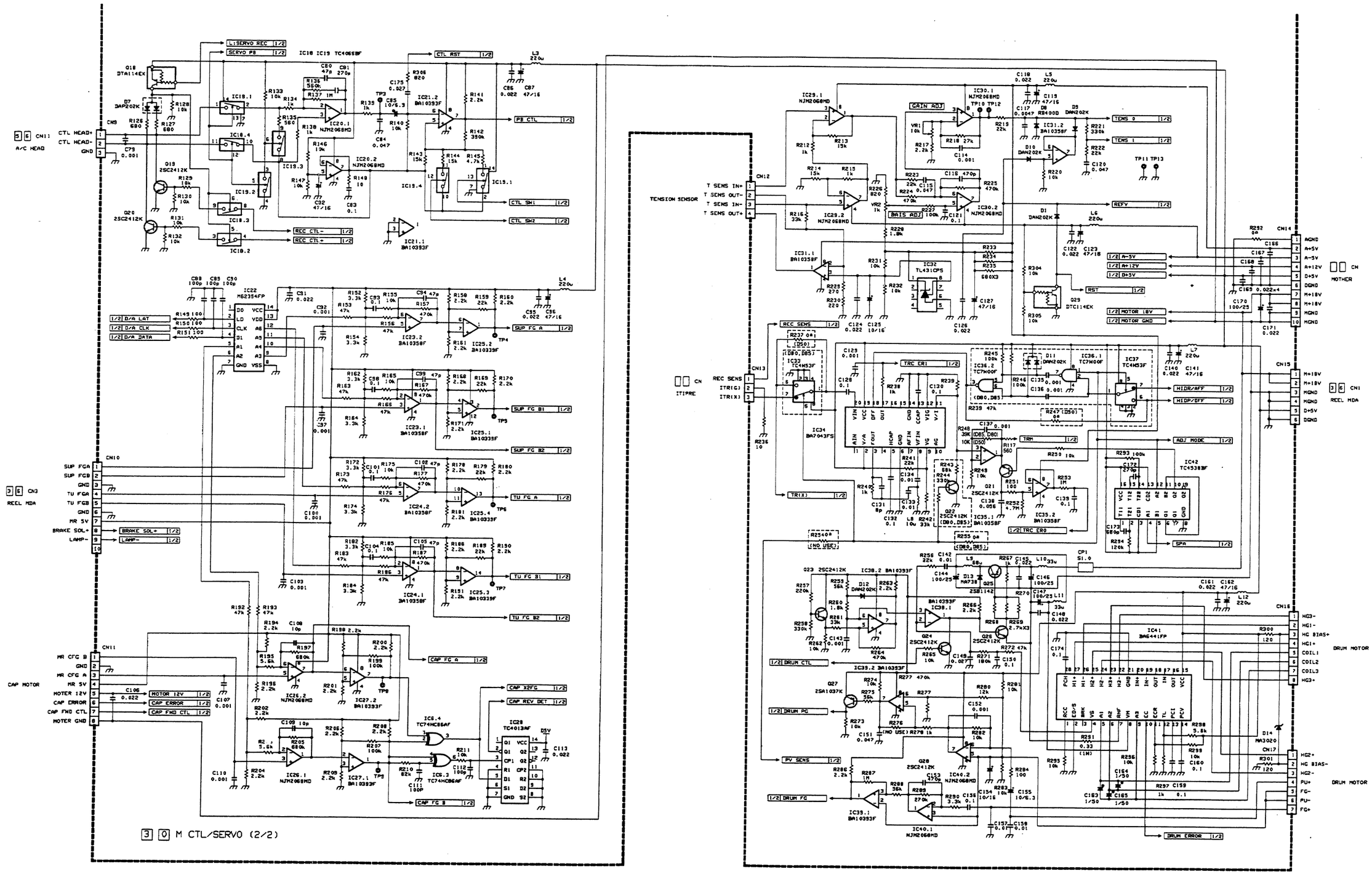

4-84

4.44 M-CTL/SERVO CIRCUIT BOARDS

— SIDE A —

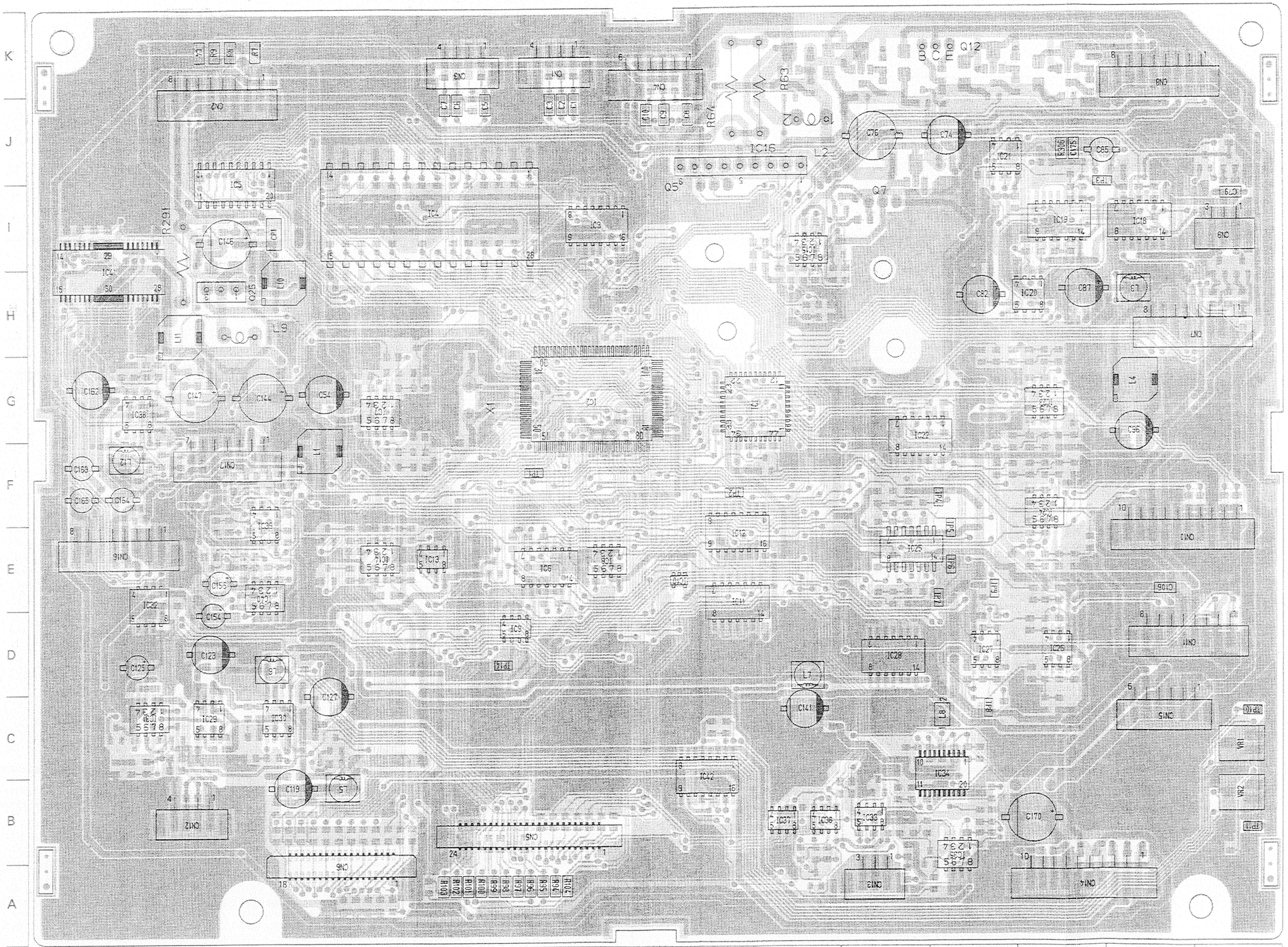

4-85

SIDE A —

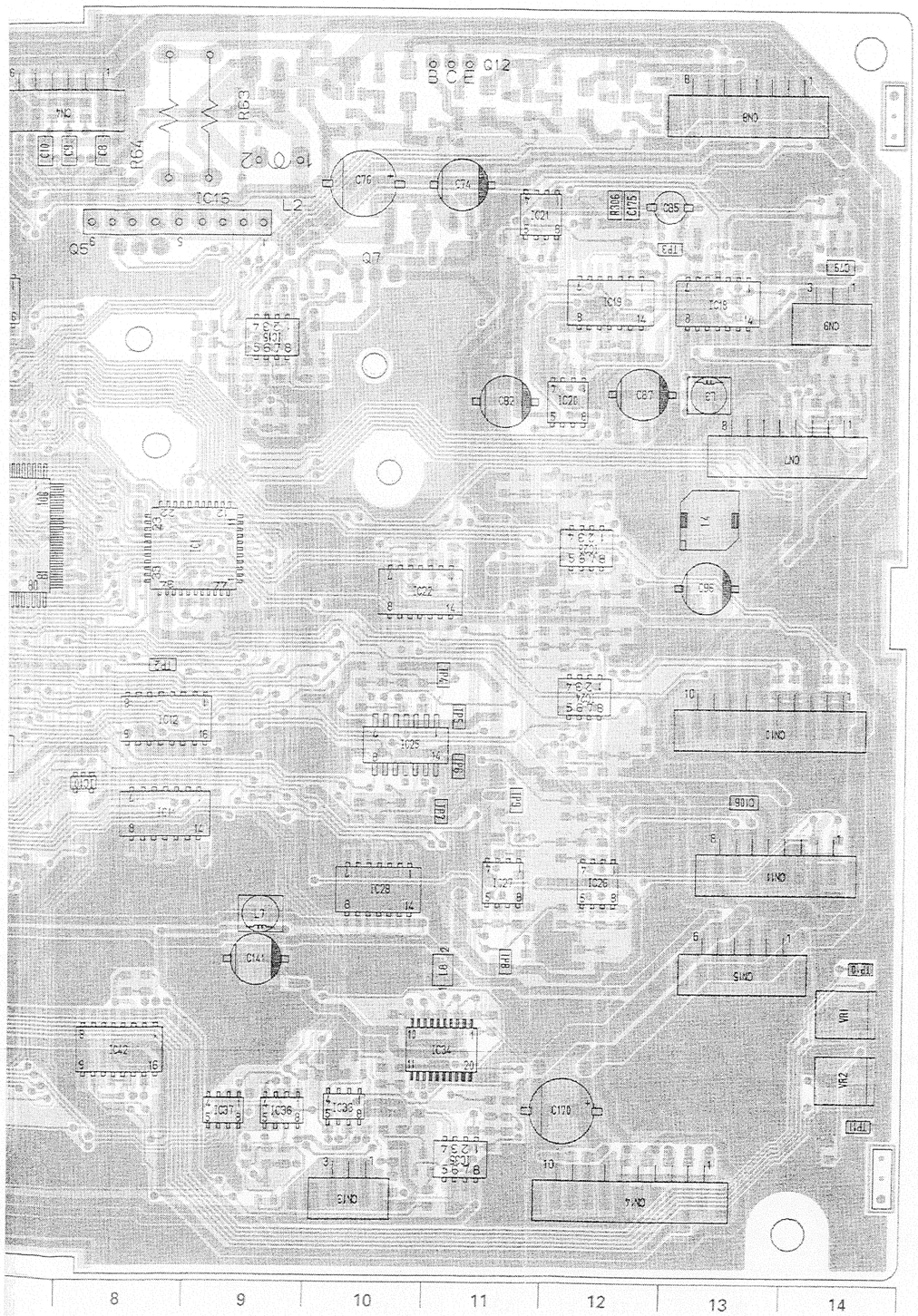

ADDRESS TABLE OF BOARD PARTS

Side — A-1C — Y axis / X axis

Each address may have an address error by one interval.

IC1	A- 9G	D10	B- 2C	R77	B- 5A	R159	B- 10F	R241	B- 10C	C13	B- 8G	C95	B- 13F	L1	A- 4F
IC2	A- 7G	D11	B- 9A	R78	B- 5A	R160	B- 11F	R242	B- 10C	C14	B- 7H	C96	A- 13G	L2	A- 9J
IC3	A- 7I	D12	B- 2F	R79	B- 5A	R161	B- 10F	R243	B- 10B	C15	B- 7H	C97	B- 14F	L3	A- 13H
IC4	A- 6I	D13	B- 3I	R80	B- 6A	R162	B- 12G	R244	B- 10B	C16	B- 8G	C98	B- 12G	L4	A- 13G
IC5	A- 3J	D14	B- 2F	R81	B- 6A	R163	B- 11G	R245	B- 9B	C17	B- 8G	C99	B- 12G	L5	A- 4B
IC6	A- 7E			R82	B- 6A	R164	B- 11G	R246	B- 9B	C18	B- 7I	C100	B- 14F	L6	A- 3D
IC7	A- 5G	R1	B- 7K	R83	B- 6A	R165	B- 12G	R247	B- 9B	C19	B- 6E	C101	B- 12E	L7	A- 9D
IC8	A- 7E	R2	B- 6K	R84	B- 6A	R166	B- 12G	R248	B- 11B	C20	B- 6E	C102	B- 12E	L8	A- 11C
IC9	A- 6D	R3	B- 6K	R85	B- 6A	R167	B- 12G	R249	B- 11B	C21	B- 6E	C103	B- 13F	L9	A- 3H
IC10	A- 8E	R4	B- 7J	R86	B- 6A	R168	B- 10E	R250	B- 11A	C22	B- 6I	C104	B- 12F	L10	A- 3H
IC11	A- 9E	R5	B- 6J	R87	B- 6B	R169	B- 10E	R251	B- 11B	C23	B- 4I	C105	B- 12F	L11	A- 2H
IC12	A- 9E	R6	B- 6J	R88	B- 6B	R170	B- 11E	R252	B- 10B	C24	B- 4I	C106	A- 13E	L12	A- 2F
IC13	A- 5E	R7	A- 3K	R89	B- 6B	R171	B- 10E	R253	B- 10A	C25	B- 4I	C107	B- 14D		
IC14	A- 5E	R8	A- 3K	R90	B- 7B	R172	B- 12E	R254	B- 10B	C26	B- 4I	C108	B- 12D	TP1	A- 6F
IC15	A- 9I	R9	A- 3K	R91	B- 7B	R173	B- 12E	R255	B- 10B	C27	B- 4I	C109	B- 12D	TP2	A- 8F
IC16	A- 9J	R10	B- 6K	R92	B- 7B	R174	B- 12E	R256	B- 2G	C28	B- 4I	C110	B- 14D	TP3	A- 13J
IC17	B- 10J	R11	B- 5K	R93	B- 7B	R175	B- 12E	R257	B- 2F	C29	B- 4I	C111	B- 6E	TP4	A- 11F
IC18	A- 13I	R12	B- 5K	R94	A- 6A	R176	B- 12E	R258	B- 2G	C30	B- 5I	C112	B- 6E	TP5	A- 11E
IC19	A- 12I	R13	B- 5J	R95	A- 6A	R177	B- 12E	R259	B- 2F	C31	B- 5I	C113	B- 10D	TP6	A- 11E
IC20	A- 12H	R14	B- 6J	R96	A- 6A	R178	B- 10E	R260	B- 2F	C32	B- 5I	C114	B- 3D	TP7	A- 11E
IC21	A- 12J	R15	B- 5J	R97	A- 6A	R179	B- 10E	R261	B- 2G	C33	B- 5I	C115	B- 3C	TP8	A- 11C
IC22	A- 11F	R16	B- 5J	R98	A- 6A	R180	B- 11E	R262	B- 2G	C34	B- 5I	C116	B- 3C	TP9	A- 11E
IC23	A- 12G	R17	B- 8K	R99	A- 6A	R181	B- 10E	R263	B- 2F	C35	B- 5I	C117	B- 2C	TP10	A- 14C
IC24	A- 12F	R18	B- 8K	R100	A- 6A	R182	B- 11F	R264	B- 2G	C36	B- 5I	C118	B- 3B	TP11	A- 14B
IC25	A- 11E	R19	B- 8K	R101	A- 5A	R183	B- 12F	R265	B- 2G	C37	B- 6I	C119	A- 3B	TP12	B- 14C
IC26	A- 12D	R20	B- 8J	R102	A- 5A	R184	B- 12F	R266	B- 2G	C38	B- 6I	C120	B- 2C	TP13	B- 14B
IC27	A- 11D	R21	B- 8J	R103	A- 5A	R185	B- 12F	R267	B- 3I	C39	B- 6I	C121	B- 3C	TP14	A- 6D
IC28	A- 10D	R22	B- 7J	R104	A- 7A	R186	B- 12F	R268	B- 3I	C40	B- 5I	C122	B- 3D		
IC29	A- 3C	R23	B- 9F	R105	B- 4B	R187	B- 12F	R269	B- 3I	C41	B- 5I	C123	A- 3D	CP1	A- 3I
IC30	A- 3C	R24	B- 9F	R106	B- 4B	R188	B- 10E	R270	B- 3I	C42	B- 5I	C124	B- 2C		
IC31	A- 2C	R25	B- 7F	R107	B- 3B	R189	B- 10E	R271	B- 2G	C43	B- 6I	C125	A- 2D	CN1	A- 6K
IC32	A- 2E	R26	B- 7F	R108	B- 3B	R190	B- 11E	R272	B- 2G	C44	B- 6I	C126	B- 4C	CN2	A- 3J
IC33	A- 10B	R27	B- 7F	R109	B- 3B	R191	B- 10E	R273	B- 3F	C45	B- 6I	C127	A- 4C	CN3	A- 5K
IC34	A- 11B	R28	B- 5F	R110	B- 3B	R192	B- 12E	R274	B- 3E	C46	B- 6I	C128	B- 11B	CN4	A- 8J
IC35	A- 11B	R29	B- 5F	R111	B- 4B	R193	B- 12D	R275	B- 3E	C47	B- 3I	C129	B- 11B	CN5	A- 6B
IC36	A- 9B	R30	B- 5F	R112	B- 4B	R194	B- 12C	R276	B- 3E	C48	B- 2J	C130	B- 11B	CN6	A- 4A
IC37	A- 9B	R31	B- 7E	R113	B- 4B	R195	B- 12D	R277	B- 3E	C49	B- 8G	C131	B- 11C	CN7	A- 14H
IC38	A- 2G	R32	B- 5E	R114	B- 4B	R196	B- 12C	R278	B- 3E	C50	B- 7F	C132	B- 11C	CN8	A- 13J
IC39	A- 3E	R33	B- 5E	R115	B- 4B	R197	B- 12D	R279	B- 3E	C51	B- 5F	C133	B- 11C	CN9	A- 14I
IC40	A- 3E	R34	B- 4E	R116	B- 4B	R198	B- 11D	R280	B- 3F	C52	B- 5G	C134	B- 11C	CN10	A- 13E
IC41	A- 2I	R35	B- 4E	R117	B- 4B	R199	B- 11D	R281	B- 3F	C53	B- 4G	C135	B- 9B	CN11	A- 13D
IC42	A- 8B	R36	B- 5E	R118	B- 5B	R200	B- 11C	R282	B- 3E	C54	A- 4G	C136	B- 10B	CN12	A- 2B
		R37	B- 5E	R119	B- 5B	R201	B- 11D	R283	B- 3F	C55	B- 5F	C137	B- 11B	CN13	A- 10A
Q1	B- 9F	R38	B- 4E	R120	B- 5B	R202	B- 12E	R284	B- 3E	C56	B- 5G	C138	B- 10B	CN14	A- 12A
Q2	B- 4E	R39	B- 4E	R121	B- 5A	R203	B- 12D	R285	B- 3E	C57	B- 5G	C139	B- 10B	CN15	A- 13C
Q3	B- 4E	R40	B- 6F	R122	B- 4A	R204	B- 12E	R286	B- 3F	C58	B- 7E	C140	B- 9C	CN16	A- 2E
Q4	B- 9I	R41	B- 9I	R123	B- 4A	R205	B- 12D	R287	B- 3F	C59	B- 5E	C141	A- 9C	CN17	A- 3F
Q5	A- 8I	R42	B- 9I	R124	B- 4A	R206	B- 11D	R288	B- 3F	C60	B- 4E	C142	B- 3G		
Q6	B- 10I	R43	B- 5G	R125	B- 4A	R207	B- 11D	R289	B- 3E	C61	B- 5E	C143	B- 1F	X1	A- 5G
Q7	A- 10I	R44	B- 5G	R126	B- 14I	R208	B- 11E	R290	B- 3E	C62	B- 5E	C144	A- 3G		
Q8	B- 9K	R45	B- 9I	R127	B- 14I	R209	B- 11D	R291	A- 2I	C63	B- 5E	C145	B- 3I		
Q9	B- 9K	R46	B- 9I	R128	B- 14J	R210	B- 6E	R292	B- 13A	C64	B- 4E	C146	A- 3I		
Q10	B- 10K	R47	B- 9I	R129	B- 14H	R211	B- 6E	R293	B- 8B	C65	B- 4E	C147	A- 2G		
Q11	B- 10K	R48	B- 4G	R130	B- 14H	R212	B- 3C	R294	B- 8C	C66	B- 9I	C148	B- 2G		
Q12	A- 11K	R49	B- 5G	R131	B- 14H	R213	B- 3C	R295	B- 2I	C67	B- 9H	C149	B- 2G		
Q13	B- 11K	R50	B- 4G	R132	B- 14H	R214	B- 2C	R296	B- 1I	C68	B- 5G	C150	B- 2G		
Q14	B- 11K	R51	B- 4G	R133	B- 12I	R215	B- 3C	R297	B- 1I	C69	B- 5G	C151	B- 3E		
Q15	B- 11K	R52	B- 5G	R134	B- 13I	R216	B- 2B	R298	B- 1I	C70	B- 4G	C152	B- 3E		
Q16	B- 12K	R53	B- 9H	R135	B- 13I	R217	B- 4D	R299	B- 1I	C71	B- 9H	C153	B- 3E		
Q17	B- 12K	R54	B- 9H	R136	B- 12I	R218	B- 3D	R300	B- 2E	C72	B- 9H	C154	A- 3D		
Q18	B- 14J	R55	B- 10H	R137	B- 13I	R219	B- 2C	R301	B- 3G	C73	B- 11J	C155	A- 3E		
Q19	B- 14H	R56	B- 10H	R138	B- 12J	R220	B- 2C	R302	B- 5H	C74	A- 11J	C156	B- 3E		
Q20	B- 14H	R57	B- 10I	R139	B- 13I	R221	B- 2C	R303	B- 7H	C75	B- 10J	C157	B- 3E		
Q21	B- 11A	R58	B- 9H	R140	B- 12J	R222	B- 2C	R304	B- 4C	C76	A- 10J	C158	B- 3E		
Q22	B- 10B	R59	B- 9H	R141	B- 12J	R223	B- 3C	R305	B- 4B	C77	B- 9D	C159	B- 1I		
Q23	B- 2G	R60	B- 6G	R142	B- 11J	R224	B- 3C	R306	A- 12J	C78	B- 9E	C160	B- 1I		
Q24	B- 2G	R61	B- 9K	R143	B- 12J	R225	B- 3C			C79	A- 14I	C161	B- 1G		
Q25	A- 3H	R62	B- 9K	R144	B- 12I	R226	B- 14B	VR1	A- 14C	C80	B- 12H	C162	A- 1G		
Q26	B- 3I	R63	A- 9K	R145	B- 12I	R227	B- 3C	VR2	A- 14B	C81	B- 12I	C163	A- 1F		
Q27	B- 3F	R64	A- 8K	R146	B- 11I	R228	B- 2E			C82	A- 11H	C164	A- 2F		
Q28	B- 3E	R65	B- 10K	R147	B- 11H	R229	B- 2C	C1	A- 7J	C83	B- 12I	C165	A- 1F		
Q29	B- 4C	R66	B- 10K	R148	B- 12I	R230	B- 2C	C2	A- 6J	C84	B- 13J	C166	B- 13A		
		R67	B- 11K	R149	B- 11G	R231	B- 2E	C3	A- 6J	C85	A- 13J	C167	B- 13A		
D1	B- 6E	R68	B- 11J	R150	B- 11G	R232	B- 2D	C4	A- 2K	C86	B- 12H	C168	B- 12A		
D2	B- 10I	R69	B- 12K	R151	B- 10G	R233	B- 4C	C5	A- 6J	C87	A- 12H	C169	B- 12A		
D3	B- 10K	R70	B- 12K	R152	B- 12F	R234	B- 4C	C6	A- 5J	C88	B- 11F	C170	A- 12B		
D4	B- 10K	R71	B- 12K	R153	B- 12G	R235	B- 4C	C7	A- 5J	C89	B- 11F	C171	B- 12B		
D5	B- 11K	R72	B- 12K	R154	B- 11F	R236	B- 10B	C8	A- 8J	C90	B- 10F	C172	B- 8B		
D6	B- 12K	R73	B- 6B	R155	B- 12F	R237	B- 10B	C9	A- 8J	C91	B- 11F	C173	B- 8C		
D7	B- 14J	R74	B- 6B	R156	B- 12F	R238	B- 11B	C10	A- 7J	C92	B- 14F	C174	B- 2H		
D8	B- 2C	R75	B- 6B	R157	B- 12G	R239	B- 10B	C11	B- 9F	C93	B- 12F	C175	A- 12J		
D9	B- 2C	R76	B- 5A	R158	B- 10F	R240	B- 11C	C12	B- 8G	C94	B- 12G				

4-85

— SIDE B

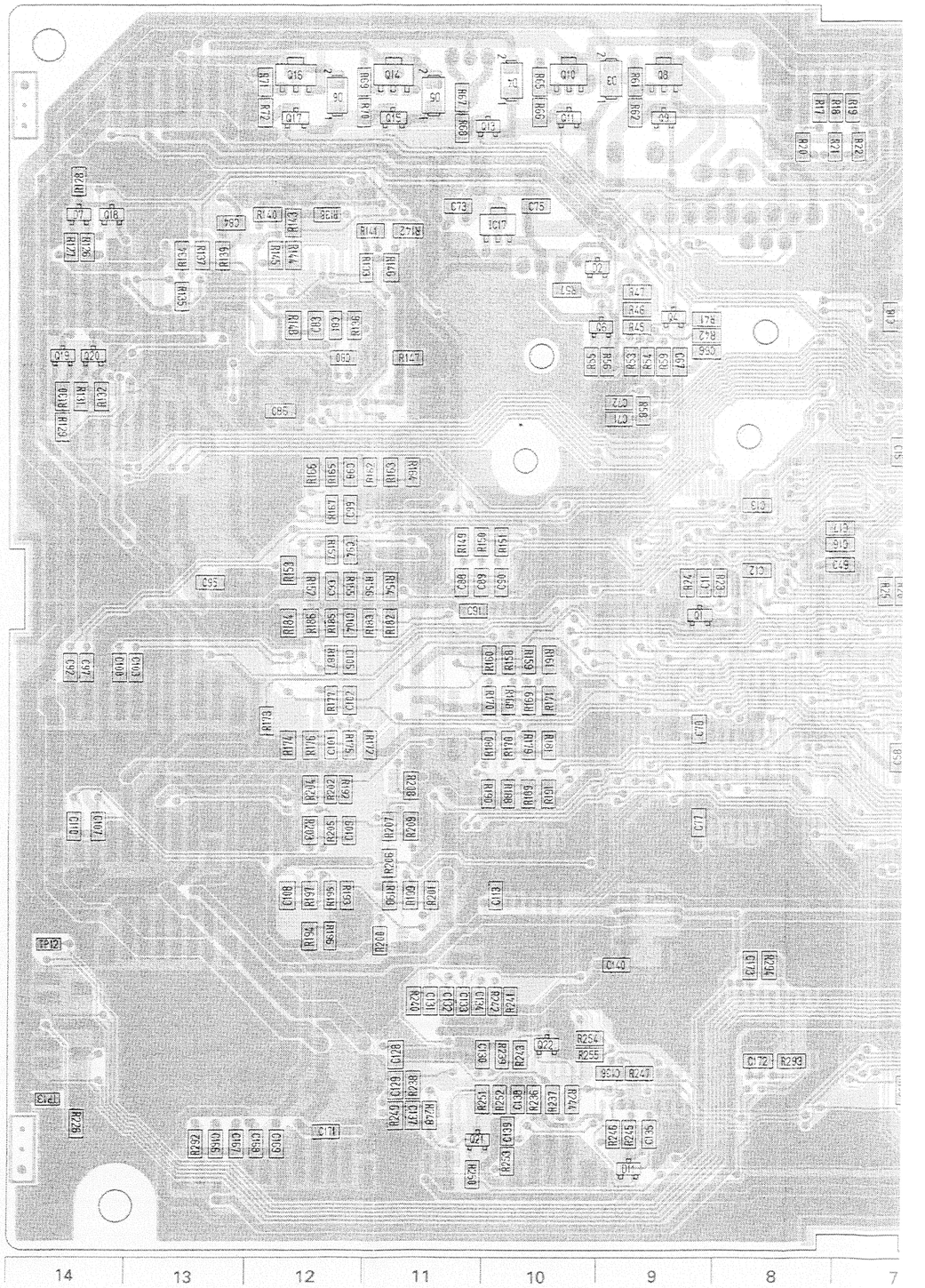

14 13 12 11 10 9 8 7

— SIDE B —

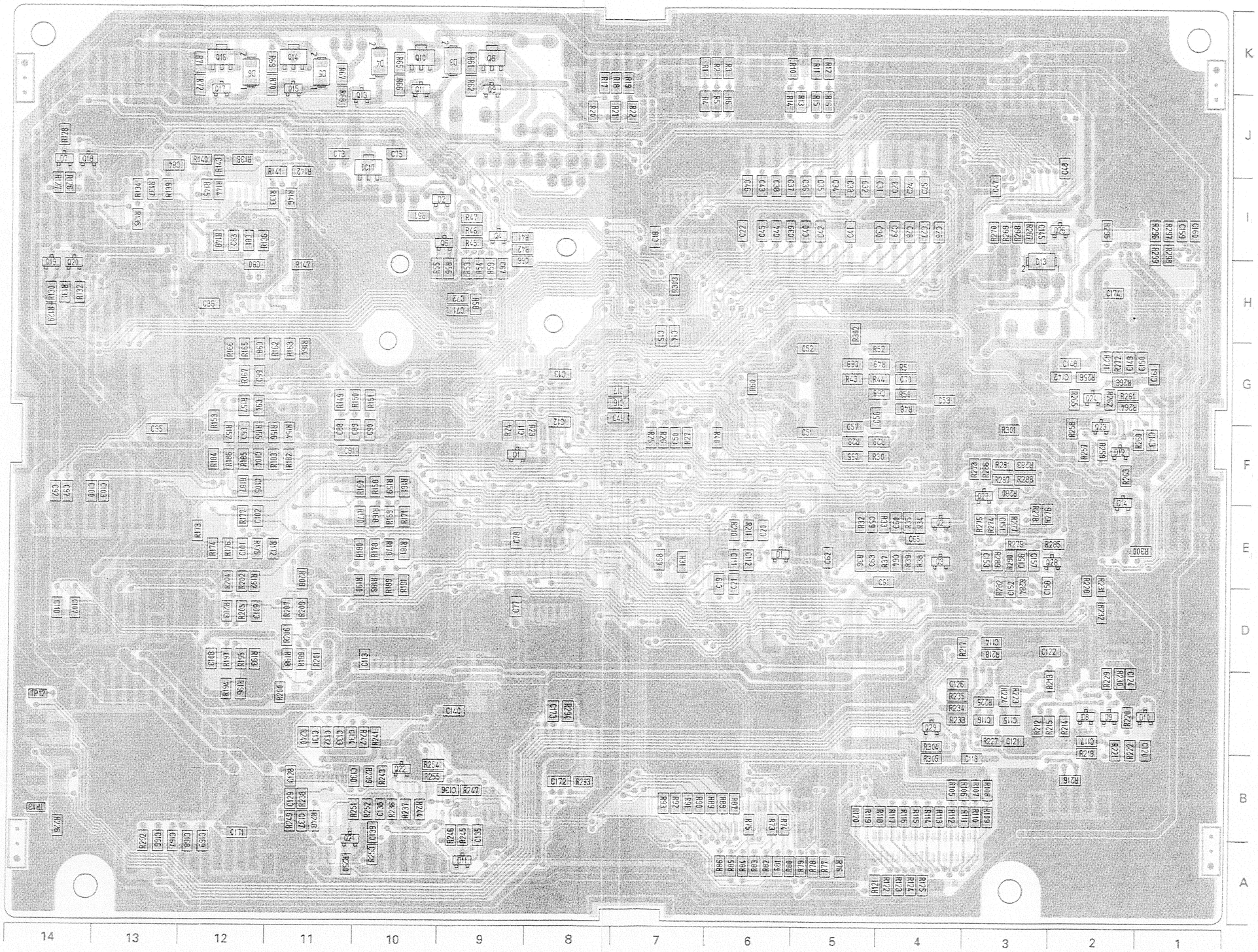

4.45 SYS/TC SCHEMATIC DIAGRAMS

— DIAGRAM 1/2 —

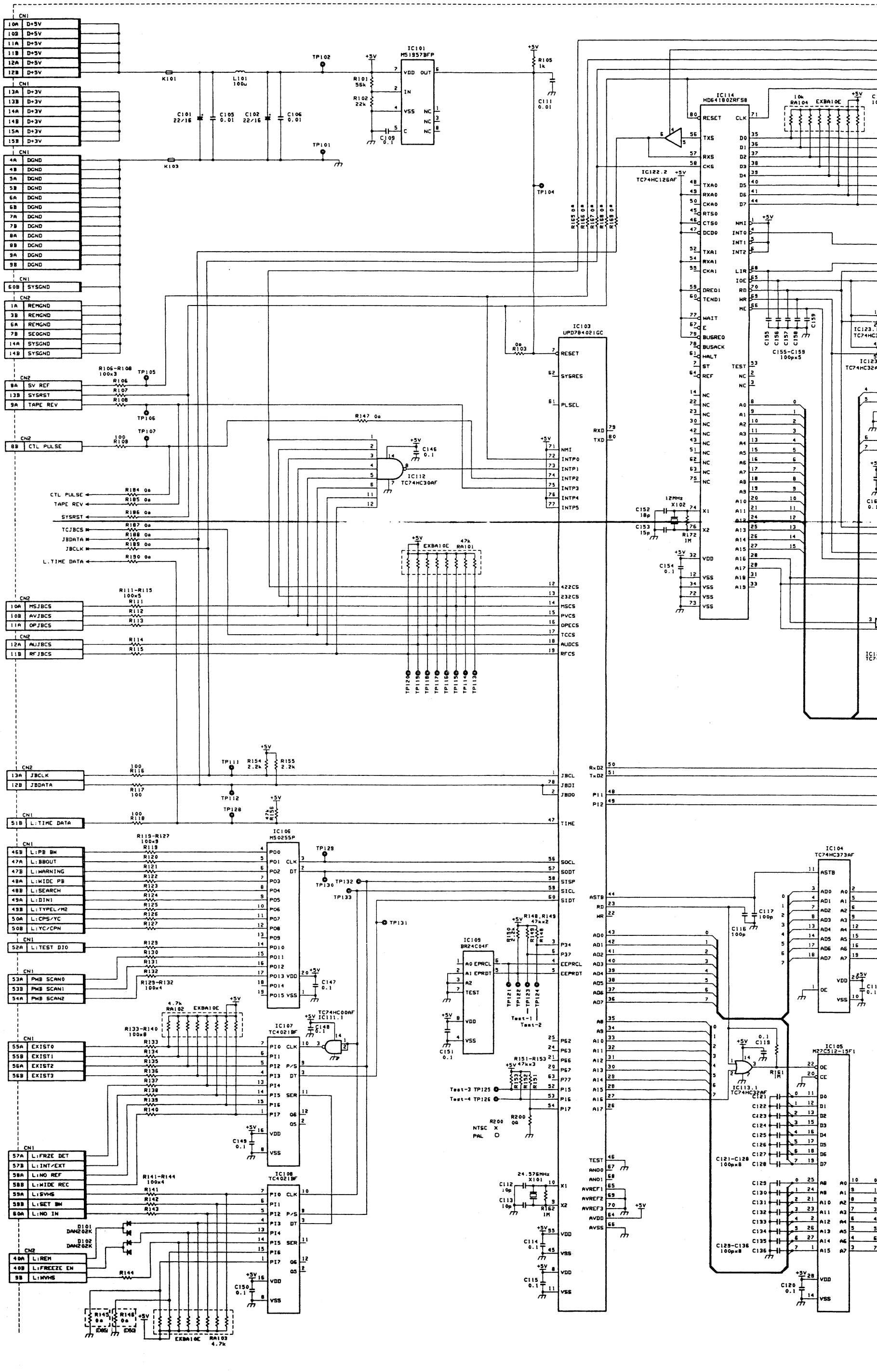

IC115 TMPZ84C30AM-6
IC118 TMP82C255AN-2
IC119 TMP91C640N-2381
IC120 MC34051P
IC116 M27C512-15F1
IC117 TC5564AFL-15
IC121 TC74HC138AF
IC104 TC74HC373AF
IC105 M27C512-15F1
IC128 TCL232CBE
X103 9.83MHz
RA105 10k EXBA10E
CN2
232DTR 4B
232RxD 5B
232TxD 5A
232DSR 4A
422RxD(+) 2B
422RxD(-) 3A
422TxD(+) 2A
422TxD(-) 1B

— DIAGRAM 2/2 —

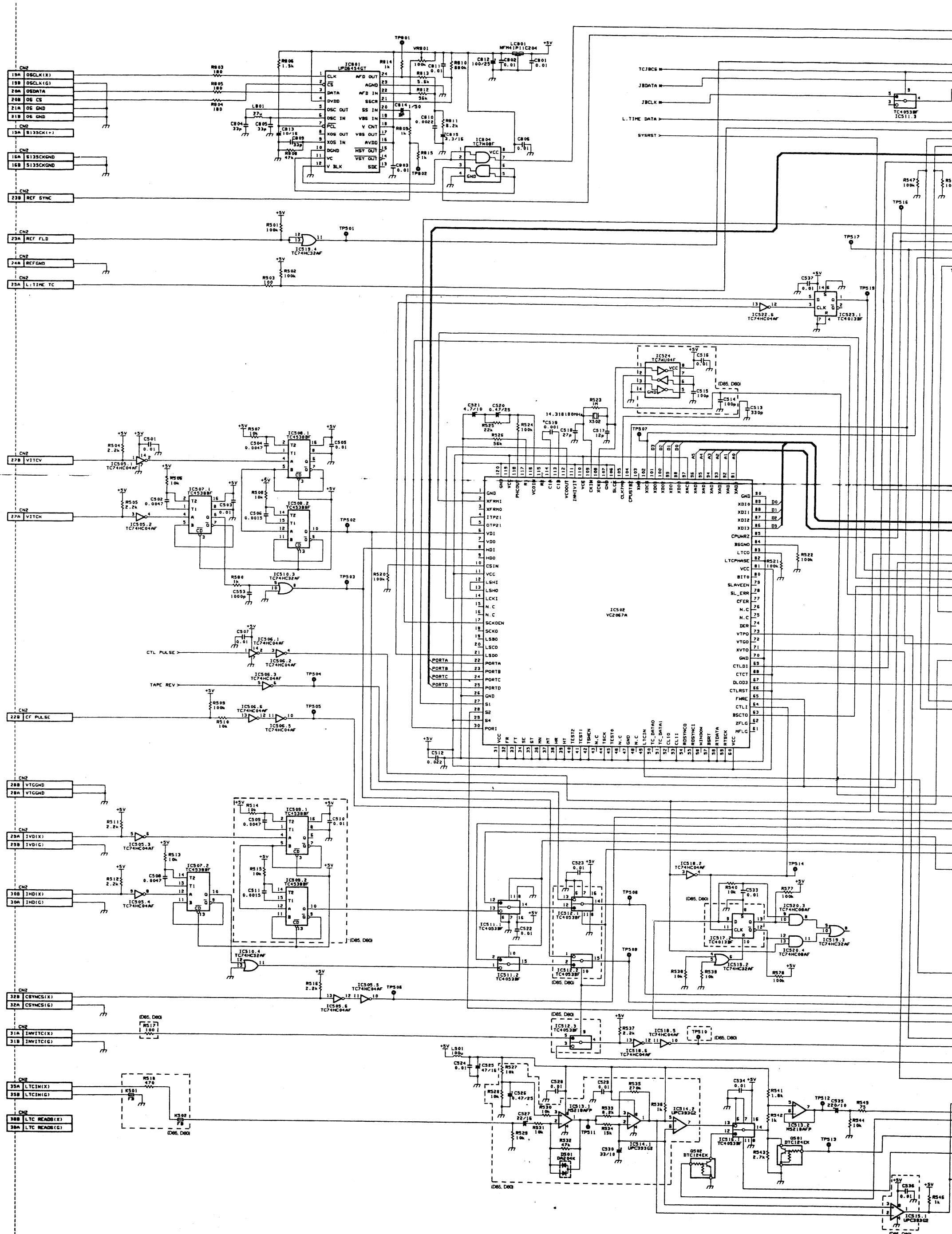
CN2
19A OSCLK(X)
19B OSCLK(G)
20A OSDATA
20B OS CS
21A OS GND
21B OS GND
15A 5135CK(+)
16A 5135CKGND
16B 5135CKGND
23B REF SYNC
23A REF FLD
24A REFGND
25A L.TIME TC
27B VITCV
27A VITCH
28B VTGGND
28A VTGGND
29A IVD(X)
29B IVD(G)
30B IHD(X)
30A IHD(G)
32B CSYNCS(X)
32A CSYNCS(G)
31A INVITC(X)
31B INVITC(G)
35A LTCIN(X)
35B LTCIN(G)
38B LTC READS(X)
38A LTC READS(G)
TCJBCS
JBDATA
JBCLK
L.TIME DATA
SYSRST
CTL PULSE
TAPE REV
CF PULSE
IC501
VC2067A
IC502
IC503
IC504
IC505
IC506
IC507
IC508
IC509
IC510
IC511
IC512
IC513
IC514
IC515
IC516
IC517
IC518
IC519
IC520
IC521
IC522
IC523
IC524
TP501
TP502
TP503
TP504
TP505
TP506
TP507
TP508
TP509
TP510
TP511
TP512
TP513
TP514
TP516
TP517
TP519
(D85, D80)

IC501
UPD78148GF-***

IC504
VC2080

CN2
VDB(X) 18B
VDB(G) 18A
VDC(X) 17A
VDC(G) 17B

VITCR DF
VITCR CF

VITCP 26B
VITCGEN 25A
LTCOUT(X) 36B
LTCOUT(G) 36A

100k X 11

— SIDE A —

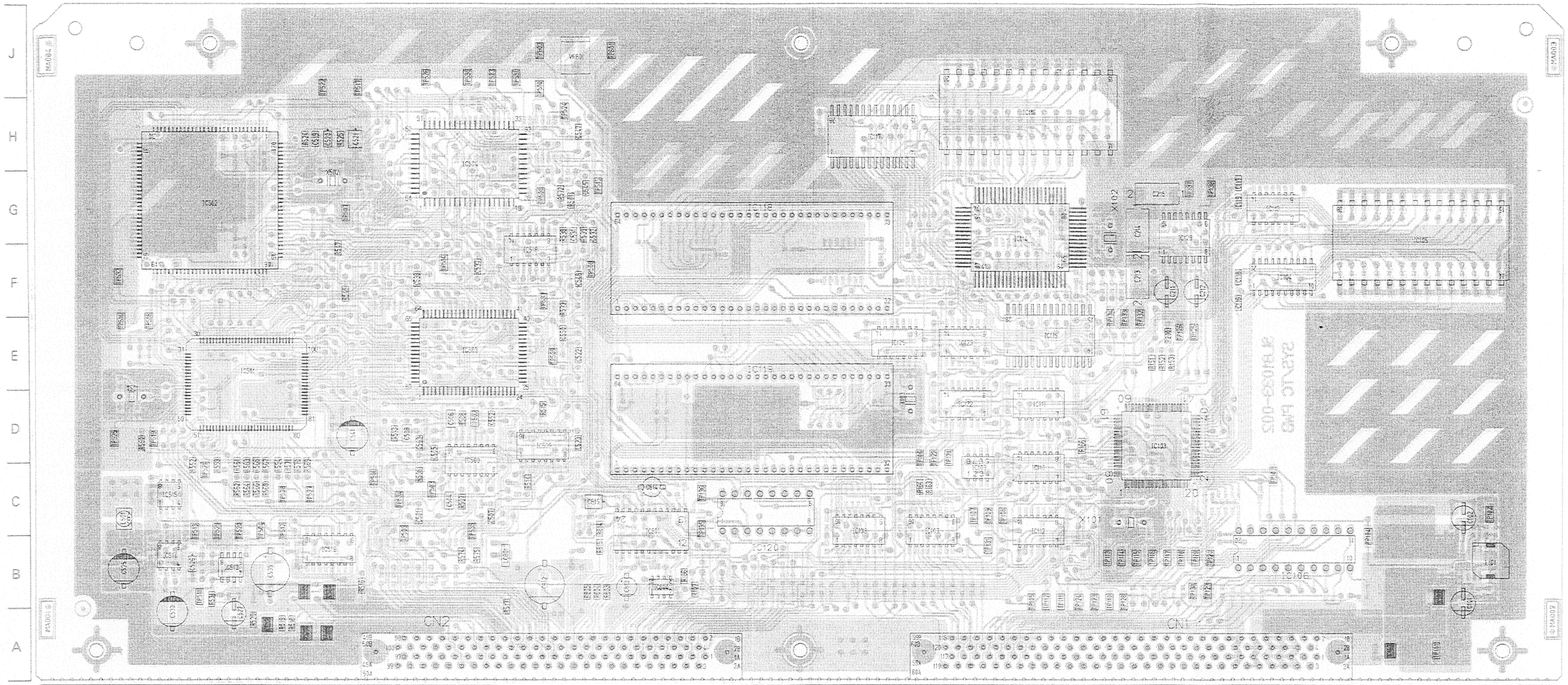

ADDRESS TABLE OF BOARD PARTS

Each address may have an address error by one interval.

Side — A-1C — Y axis / X axis

IC101	B- 20C	IC124	B- 13F	IC519	B- 8G	R107	A- 10C	R129	B- 16C	R151	A- 16E	R177	B- 11C	R504	B- 6C	R526	B- 4H	R548	A- 5F	R570	A- 4D	R815	A- 8C	C124	B- 21G	C146	B- 14C	C168	B- 14H	C190	B- 15J
IC103	A- 16D	IC125	A- 12E	IC520	B- 7H	R108	B- 10C	R130	B- 16C	R152	A- 16E	R178	B- 11B	R505	B- 6C	R527	B- 3C	R549	B- 2F	R571	A- 4D			C125	B- 20G	C147	B- 17C	C169	B- 14H	C191	B- 13E
IC104	A- 17F	IC126	B- 12F	IC521	B- 8H	R109	B- 10B	R131	B- 16C	R153	A- 16E	R179	B- 11C	R506	A- 6D	R528	B- 3C	R550	B- 2E	R572	A- 8G	VR801	A- 8J	C126	B- 20G	C148	B- 14E	C170	B- 14H	C192	B- 12G
IC105	A- 18G	IC129	A- 16G	IC522	B- 6F	R110	B- 10C	R132	B- 16C	R154	B- 15D	R180	B- 11C	R507	A- 6D	R529	A- 3B	R551	B- 2E	R573	A- 8F			C127	B- 20G	C149	B- 12C	C171	B- 14H	C193	B- 9G
IC106	A- 17C	IC501	A- 3E	IC523	B- 7F	R111	B- 11C	R133	B- 14C	R155	B- 15D	R181	B- 11B	R508	A- 6E	R530	B- 3C	R552	A- 3D	R574	A- 6C	C101	A- 20B	C128	B- 20G	C150	B- 11C	C172	B- 14H	C194	B- 11H
IC107	A- 12C	IC502	A- 3G	IC524	B- 5G	R112	B- 10B	R134	B- 13C	R156	B- 16C	R182	B- 11B	R509	B- 6C	R531	A- 3B	R553	A- 3D	R575	A- 7C	C102	A- 20C	C129	B- 19G	C151	B- 13D	C173	B- 14H	C195	B- 11G
IC108	A- 11C	IC503	A- 6E	IC801	A- 8C	R113	B- 10C	R135	B- 13C	R161	B- 17G	R183	B- 11C	R510	B- 6C	R532	B- 3C	R554	A- 4D	R576	B- 7E	C105	B- 20B	C130	B- 19G	C152	B- 15F	C174	B- 13H	C196	B- 12E
IC109	A- 13D	IC504	A- 6H	IC804	A- 9C	R114	B- 10C	R136	B- 13C	R162	B- 16D	R184	B- 8D	R511	B- 5C	R533	B- 2B	R555	B- 5E	R577	B- 8F	C106	B- 20C	C131	B- 20G	C153	B- 15G	C175	B- 14J	C197	B- 12E
IC110	A- 14D	IC505	B- 6C			R115	B- 10C	R137	B- 13C	R163	A- 13D	R185	B- 8D	R512	B- 5C	R534	B- 2B	R556	B- 4E	R578	B- 8G	C109	B- 20C	C132	B- 19G	C154	B- 15G	C176	B- 14J	C198	B- 9E
IC111	A- 14E	IC506	B- 7C	Q501	B- 4C	R116	B- 10C	R138	B- 13C	R164	A- 13D	R186	A- 9C	R513	A- 5D	R535	B- 2C	R557	B- 2F	R579	B- 7H	C111	B- 20C	C133	B- 19F	C155	B- 15F	C177	B- 14J	C199	B- 10C
IC112	A- 14C	IC507	B- 6D	Q502	B- 5C	R117	B- 10C	R139	B- 13C	R165	B- 14C	R187	B- 9D	R514	A- 7D	R536	B- 3C	R558	B- 4E	R580	B- 6D	C112	B- 16C	C134	B- 19G	C156	B- 15G	C178	B- 14J	C211	A- 16F
IC113	A- 17G	IC508	A- 6D			R118	B- 16C	R140	B- 13C	R166	A- 15D	R188	B- 9D	R515	A- 7E	R537	B- 7G	R559	B- 2E	R803	A- 8C	C113	B- 15D	C135	B- 19G	C157	B- 15F	C179	B- 13H	C212	A- 16F
IC114	A- 14G	IC509	A- 7D	D101	B- 12C	R119	B- 17B	R141	B- 12C	R167	B- 15D	R189	B- 9D	R516	A- 5C	R538	A- 8G	R560	A- 2D	R804	A- 8C	C114	B- 16E	C136	B- 18F	C158	B- 15F	C180	B- 13J	C213	A- 16F
IC115	A- 14F	IC510	B- 7D	D102	B- 12C	R120	B- 17B	R142	B- 12C	R168	B- 15E	R190	B- 9D	R517	A- 7B	R539	A- 8G	R561	A- 3D	R805	A- 8C	C115	B- 16D	C137	B- 20F	C159	B- 15F	C181	B- 13J	C214	A- 16G
IC116	A- 13H	IC511	B- 8E	D501	B- 3C	R121	B- 17B	R143	B- 12C	R169	B- 14D	R196	B- 12C	R518	A- 4B	R540	B- 6H	R562	A- 3D	R806	B- 8C	C116	A- 17F	C138	B- 20F	C160	B- 13F	C182	B- 13H	C215	A- 16G
IC117	A- 11H	IC512	B- 8D			R122	B- 17B	R144	B- 11C	R170	B- 15F	R197	B- 11C	R519	A- 4B	R541	B- 3C	R563	A- 3D	R808	B- 9C	C117	A- 17G	C139	B- 20F	C161	B- 12F	C183	B- 15H	C501	A- 6C
IC118	A- 8F	IC513	A- 3C	R101	B- 20C	R123	B- 17C	R145	B- 11C	R171	B- 14G	R198	B- 10B	R520	B- 3H	R542	B- 3C	R564	A- 3D	R809	B- 9C	C118	A- 17F	C140	B- 19F	C162	B- 14G	C184	B- 15H	C502	B- 6D
IC119	A- 8D	IC514	A- 2C	R102	B- 21C	R124	B- 17C	R146	B- 11C	R172	B- 15G	R199	B- 12C	R521	B- 3G	R543	B- 4C	R565	A- 3D	R810	B- 9C	C119	A- 17G	C141	B- 19F	C163	B- 13G	C185	B- 15H	C503	A- 6D
IC120	A- 10C	IC515	A- 2D	R103	B- 17D	R125	B- 19B	R147	B- 14D	R173	B- 12E	R200	A- 16F	R522	B- 3G	R544	B- 4C	R566	A- 3D	R811	B- 8C	C120	B- 18G	C142	B- 19F	C164	B- 15G	C186	B- 15H	C504	A- 6D
IC121	B- 14F	IC516	A- 4C	R104	B- 15E	R126	B- 18B	R148	B- 15C	R174	B- 9E	R501	A- 8G	R523	B- 4H	R545	B- 4C	R567	A- 4D	R812	B- 8D	C121	B- 20F	C143	B- 19F	C165	B- 14F	C187	B- 15J	C505	A- 6D
IC122	A- 13E	IC517	B- 8F	R105	B- 20C	R127	B- 17C	R149	B- 15C	R175	B- 9E	R502	B- 6C	R524	A- 4H	R546	B- 2D	R568	A- 4D	R813	B- 8C	C122	B- 20F	C144	B- 19F	C166	B- 13H	C188	B- 15J	C506	A- 6E
IC123	A- 13E	IC518	A- 7G	R106	B- 11C	R128	B- 16C	R150	B- 15D	R176	B- 10C	R503	B- 6C	R525	A- 5H	R547	A- 5G	R569	A- 4D	R814	A- 8C	C123	B- 20F	C145	B- 14D	C167	B- 15H	C189	B- 15J	C507	A- 7C

4-89

— SIDE B —

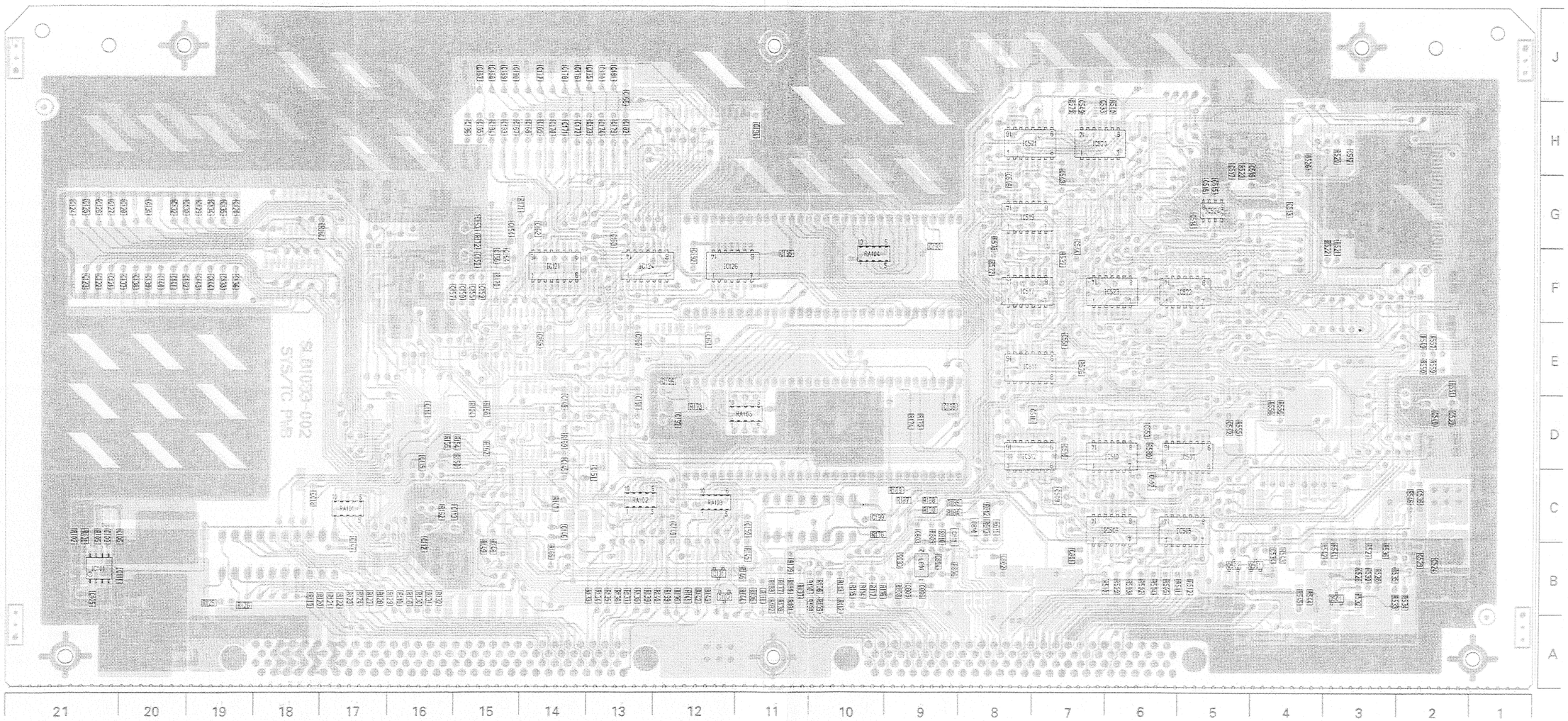

C508 A- 6D
C509 B- 7D
C510 B- 7D
C511 B- 7E
C512 B- 3H
C513 B- 4G
C514 B- 5G
C515 B- 5G
C516 B- 5G
C517 B- 5H
C518 B- 4H
C519 A- 4H
C520 A- 4H
C521 A- 5H
C522 A- 8E
C523 A- 8D
C524 B- 2C
C525 A- 2C
C526 A- 3C
C527 A- 3B
C528 B- 3C
C529 B- 2C

C530 A- 2B
C531 A- 8G
C532 A- 8G
C533 B- 6H
C534 B- 4C
C535 A- 4C
C536 B- 2D
C537 A- 7F
C538 A- 6F
C539 B- 2E
C540 B- 2E
C541 A- 5D
C542 B- 5E
C543 B- 7G
C544 B- 7G
C545 A- 8G
C546 B- 8G
C547 A- 8H
C548 A- 8F
C549 B- 7H
C550 A- 8F
C551 B- 7F

C552 A- 7E
C553 B- 6E
C801 B- 7C
C802 B- 8C
C803 B- 9C
C804 B- 9C
C805 B- 9C
C806 B- 9C
C809 B- 9C
C810 B- 8C
C811 B- 8C
C812 A- 7C
C813 A- 9C
C814 A- 9D
C815 A- 8D

L101 A- 20C
L501 A- 2C
L801 B- 9C

TP101 A- 20B
TP102 A- 20C

TP103 A- 18D
TP104 A- 19C
TP105 A- 14B
TP106 A- 13D
TP107 A- 13C
TP108 A- 14C
TP109 A- 14C
TP110 A- 15B
TP111 A- 15B
TP112 A- 14B
TP113 A- 15C
TP114 A- 15C
TP115 A- 16C
TP116 A- 16C
TP117 A- 16C
TP118 A- 16C
TP119 A- 16C
TP120 A- 17C
TP121 A- 13D
TP122 A- 13D
TP123 A- 15B
TP124 A- 15B

TP125 A- 16F
TP126 A- 16F
TP128 A- 15B
TP129 A- 17C
TP130 A- 16C
TP131 A- 14C
TP132 A- 16F
TP133 A- 15F
TP134 A- 15F
TP135 A- 10C
TP136 A- 10D
TP137 A- 16G
TP138 A- 17G
TP501 A- 7G
TP502 A- 6E
TP503 A- 6D
TP504 A- 4C
TP505 A- 6C
TP506 A- 5D
TP507 A- 5G
TP508 A- 8F
TP509 A- 8E

TP510 A- 7H
TP511 A- 3B
TP512 A- 4C
TP513 A- 3C
TP514 A- 6F
TP515 A- 8G
TP516 A- 2F
TP517 A- 5J
TP518 A- 2F
TP519 A- 2D
TP520 A- 3C
TP521 A- 3D
TP522 A- 4J
TP523 A- 7J
TP524 A- 8H
TP525 A- 2D
TP526 A- 6J
TP527 A- 4D
TP528 A- 4D
TP529 A- 3C
TP530 A- 6J
TP531 A- 7J

TP532 A- 2F
TP533 A- 7F
TP534 A- 5D
TP535 A- 6C
TP801 A- 8J
TP802 A- 7J

K101 A- 20B
K103 A- 19B
K501 A- 4B
K502 A- 4B
K503 A- 4B
K504 A- 4C
K505 A- 4C

LC801 A- 7C

RA101 B- 17D
RA102 B- 13D
RA103 B- 12D
RA104 B- 10G
RA105 B- 11E

CN1 A- 16A
CN2 A- 8A

X101 A- 15C
X102 A- 15G
X103 A- 12E
X501 A- 2E
X502 A- 4G

4-90

4.47 OPERATION SCHEMATIC DIAGRAM

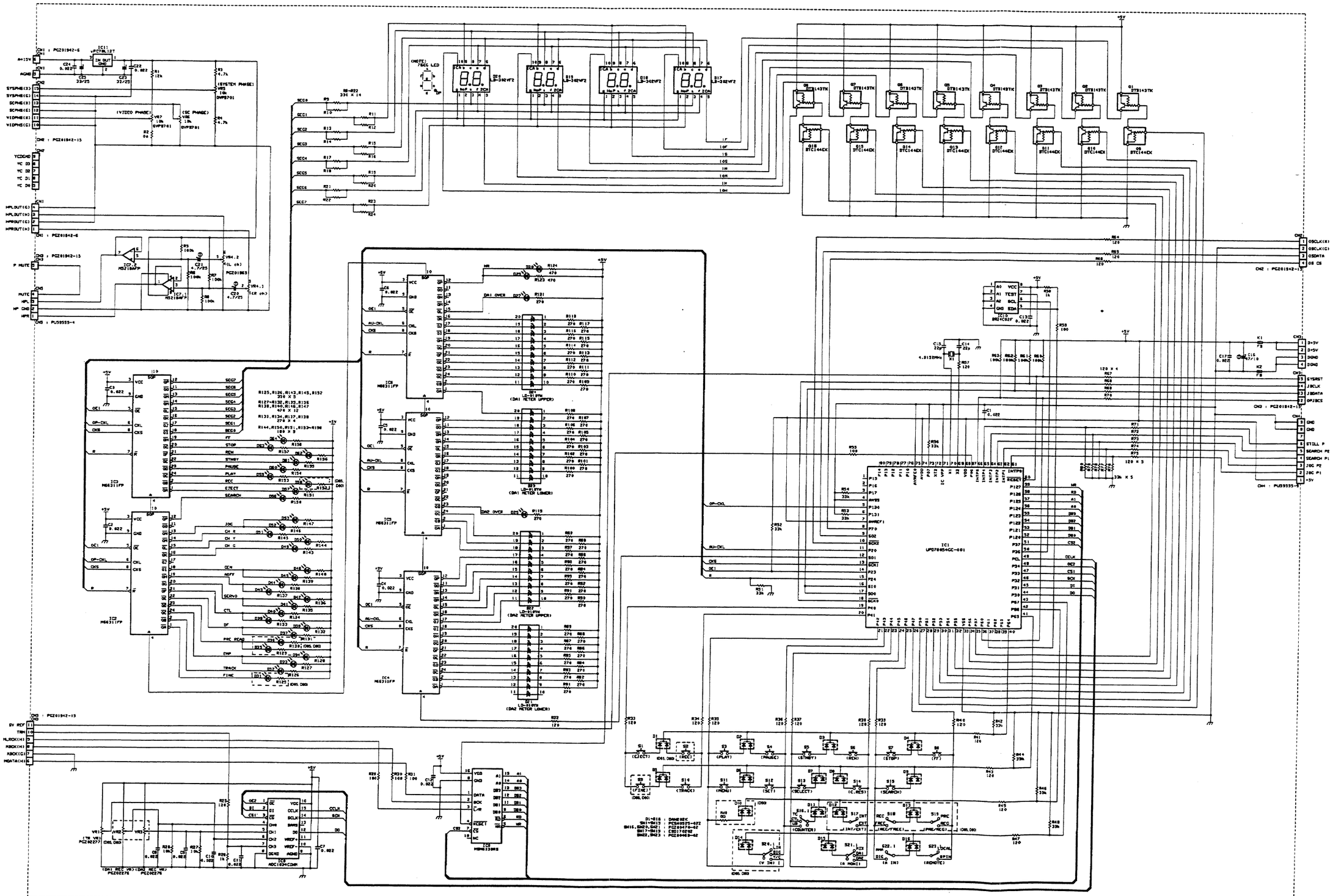

4-91

4.48 OPERATION CIRCUIT BOARDS

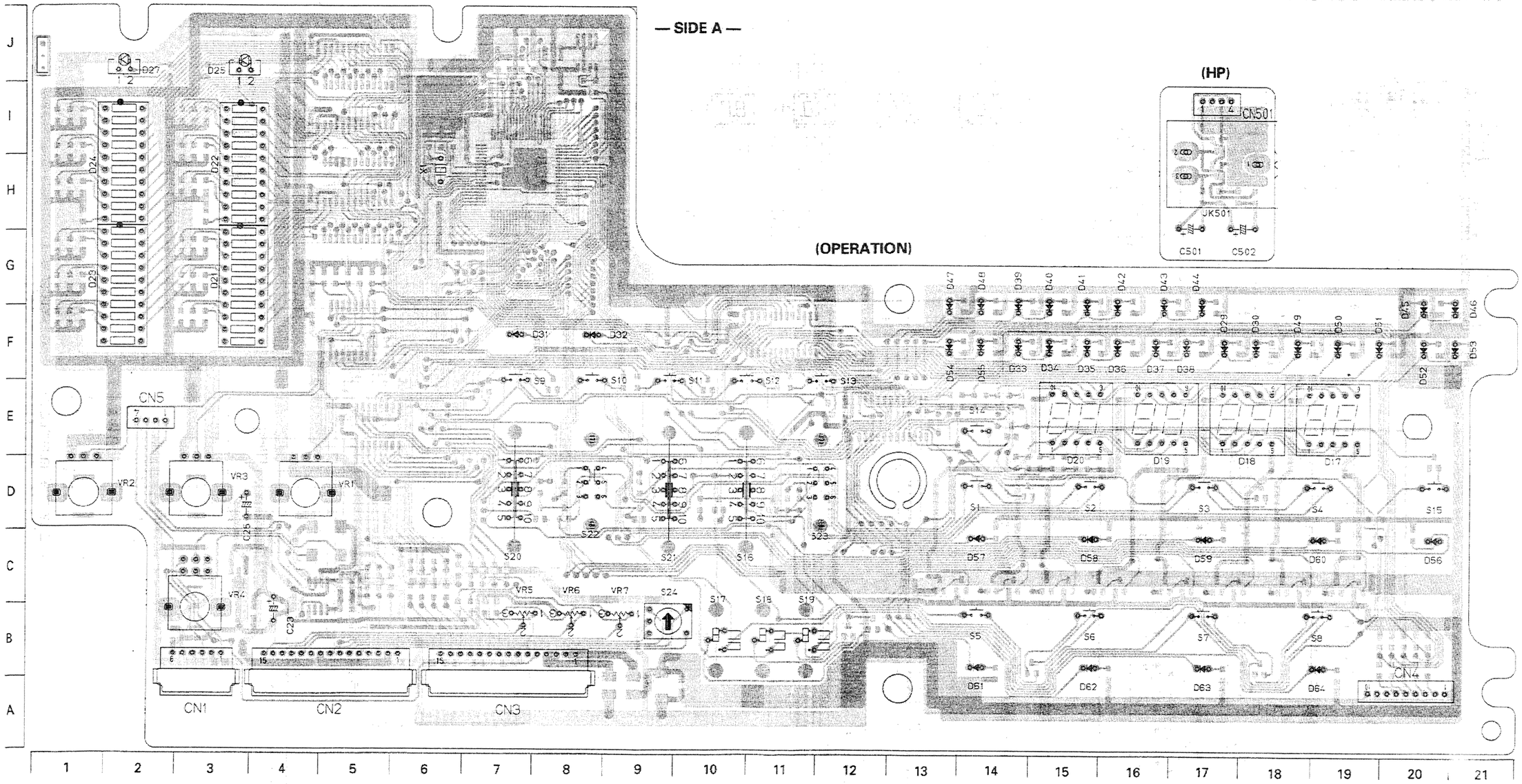

● ADDRESS TABLE OF BOARD PARTS

Side — A-1C — Y axis / X axis

Each address may have an address error by one interval.

IC1	B- 7H	Q7	B- 14C	D8	B- 14E	D27	A- 2J	D46	A- 21F	D64	A- 19B	R17	B- 14E	R35	B- 9E	R53	B- 7J	R71	B- 20B	R89	B- 3G	R107	B- 1G	R127	B- 15F	R145	B- 20F
IC2	B- 11F	Q8	B- 13C	D9	B- 20D	D29	A- 17F	D47	A- 13F			R18	B- 14E	R36	B- 11E	R54	B- 7J	R72	B- 20B	R90	B- 3H	R108	B- 1G	R128	B- 15F	R146	B- 20F
IC3	B- 12E	Q9	B- 19C	D10	B- 11D	D30	A- 18F	D48	A- 14F	R1	B- 7B	R19	B- 15D	R37	B- 11E	R55	B- 6C	R73	B- 20B	R91	B- 3H	R109	B- 1H	R129	B- 16F	R147	B- 21F
IC4	B- 5H	Q10	B- 18C	D11	B- 10D	D31	A- 7F	D49	A- 18F	R2	B- 7B	R20	B- 16D	R38	B- 9D	R56	B- 6I	R74	B- 20B	R92	B- 3H	R110	B- 1H	R130	B- 16F	R148	B- 14F
IC5	B- 5I	Q11	B- 18C	D12	B- 12B	D32	A- 8F	D50	A- 19F	R3	B- 6B	R21	B- 14D	R39	B- 8D	R57	B- 6H	R75	B- 20B	R93	B- 3H	R111	B- 1H	R131	B- 17F	R149	B- 14F
IC6	B- 5J	Q12	B- 17C	D13	B- 12B	D33	A- 14F	D51	A- 20F	R4	B- 7B	R22	B- 15D	R40	B- 11E	R58	B- 8I	R76	B- 20B	R94	B- 3I	R112	B- 1H	R132	B- 17F	R150	B- 20C
IC7	B- 4C	Q13	B- 16C	D14	B- 8D	D34	A- 15F	D52	A- 20F	R5	B- 5B	R23	B- 15D	R41	B- 6G	R59	B- 8I	R77	B- 20B	R95	B- 3I	R113	B- 1I	R133	B- 15G	R151	B- 14C
IC8	B- 5F	Q14	B- 15C	D15	B- 9D	D35	A- 15F	D53	A- 21F	R6	B- 5C	R24	B- 15D	R42	B- 6G	R60	B- 6C	R78	B- 20B	R96	B- 3I	R114	B- 1I	R134	B- 15G	R152	B- 16C
IC9	B- 5E	Q15	B- 14C	D16	B- 8D	D36	A- 16F	D54	A- 13F	R7	B- 5B	R25	B- 7C	R43	B- 7G	R61	B- 6C	R79	B- 20B	R97	B- 3I	R115	B- 1I	R135	B- 16G	R153	B- 17C
IC10	B- 8J	Q16	B- 14C	D17	A- 19E	D37	A- 16F	D55	A- 14F	R8	B- 5C	R26	B- 5G	R44	B- 6G	R62	B- 6C	R80	B- 20B	R98	B- 3I	R116	B- 1I	R136	B- 16G	R154	B- 19C
IC11	B- 3C			D18	A- 18E	D38	A- 17F	D56	A- 20C	R9	B- 15D	R27	B- 5G	R45	B- 10D	R63	B- 6C	R81	B- 3F	R99	B- 3I	R117	B- 1I	R137	B- 17G	R155	B- 14B
		D1	B- 15D	D19	A- 16E	D39	A- 14F	D57	A- 14C	R10	B- 15D	R28	B- 5G	R46	B- 7G	R64	B- 6C	R82	B- 3F	R100	B- 1F	R118	B- 1I	R138	B- 17G	R156	B- 16B
Q1	B- 19C	D2	B- 18D	D20	A- 15E	D40	A- 15F	D58	A- 15C	R11	B- 14E	R29	B- 7C	R47	B- 8D	R65	B- 5C	R83	B- 3F	R101	B- 1F	R119	B- 3J	R139	B- 20G	R157	B- 17B
Q2	B- 18C	D3	B- 15B	D21	A- 3G	D41	A- 15F	D59	A- 17C	R12	B- 14E	R30	B- 7C	R48	B- 7G	R66	B- 5C	R84	B- 3G	R102	B- 1F	R121	B- 2J	R140	B- 20G	R158	B- 19B
Q3	B- 17C	D4	B- 18B	D22	A- 3I	D42	A- 16F	D60	A- 19C	R13	B- 14E	R31	B- 7C	R49	B- 11D	R67	B- 6C	R85	B- 3G	R103	B- 1G	R123	B- 18F	R141	B- 14G		
Q4	B- 16C	D5	B- 8E	D23	A- 1G	D43	A- 16F	D61	A- 14B	R14	B- 14E	R32	B- 7J	R50	B- 11D	R68	B- 6C	R86	B- 3G	R104	B- 1G	R124	B- 18F	R142	B- 14G	VR1	A- 4D
Q5	B- 16C	D6	B- 10E	D24	A- 1I	D44	A- 17F	D62	A- 15B	R15	B- 13E	R33	B- 7E	R51	B- 8J	R69	B- 6C	R87	B- 3G	R105	B- 1G	R125	B- 8F	R143	B- 19F	VR2	A- 1D
Q6	B- 15C	D7	B- 12E	D25	A- 3J	D45	A- 20F	D63	A- 17B	R16	B- 13E	R34	B- 9E	R52	B- 7J	R70	B- 6C	R88	B- 3G	R106	B- 1G	R126	B- 9F	R144	B- 19F	VR3	A- 3D

4-92

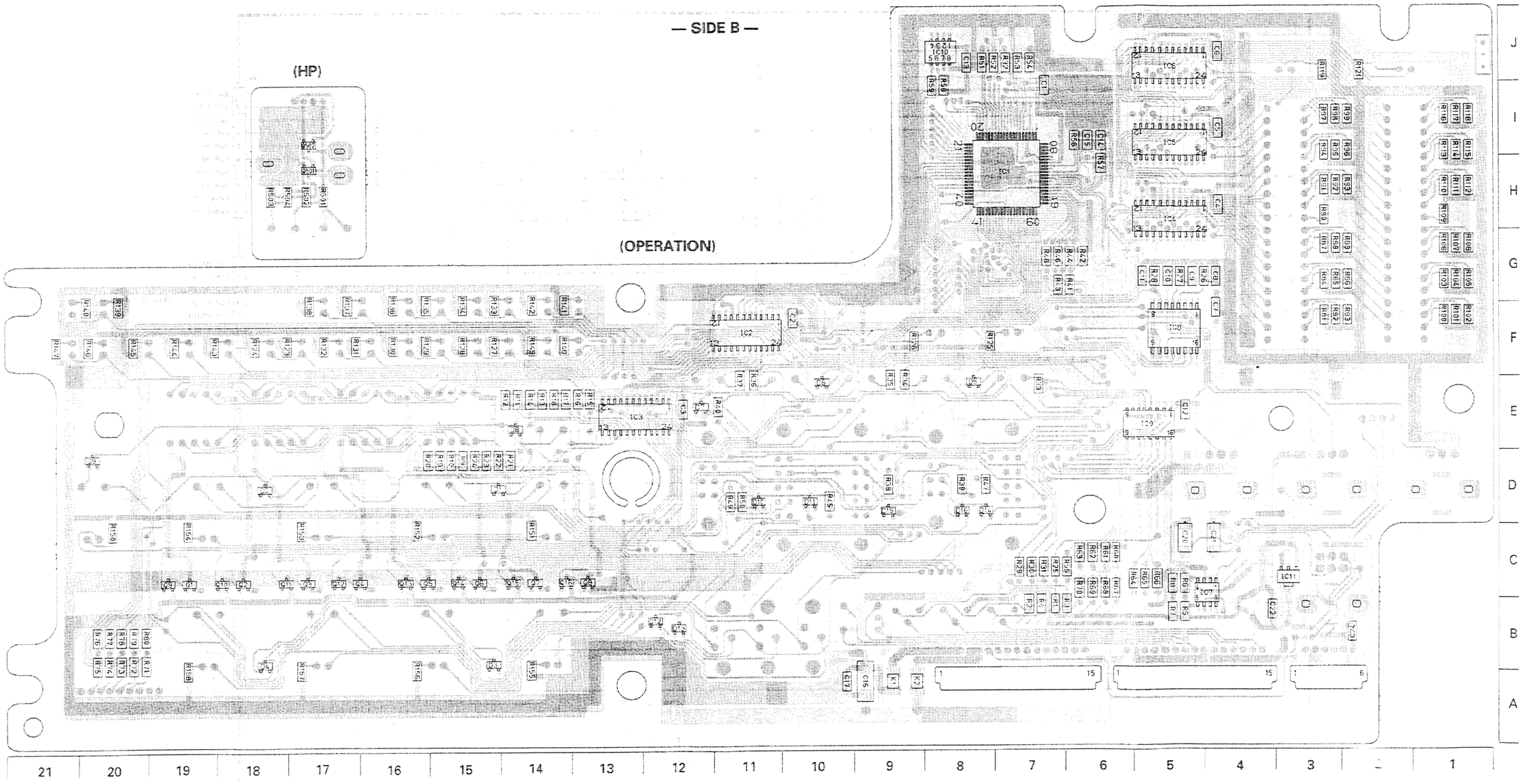

VR4	A- 3B	C14	B- 6I	K2	B- 9A	S17	A- 10B
VR5	A- 8B	C15	B- 6I			S18	A- 11B
VR6	A- 8B	C16	B- 9A	S1	A- 14D	S19	A- 11B
VR7	A- 9B	C17	B- 10A	S2	A- 15D	S20	A- 7D
		C20	B- 5C	S3	A- 17D	S21	A- 9D
C1	B- 7I	C21	B- 4C	S4	A- 19D	S22	A- 8D
C2	B- 10F	C22	B- 4B	S5	A- 14B	S23	A- 12D
C3	B- 12E	C23	A- 4C	S6	A- 15B	S24	A- 9B
C4	B- 4H	C24	B- 2B	S7	A- 17B		
C5	B- 4I	C25	A- 3D	S8	A- 19B	X1	A- 6H
C6	B- 4J			S9	A- 7E		
C7	B- 4F	CN1	A- 3B	S10	A- 8E		
C8	B- 4G	CN2	A- 6B	S11	A- 9E		
C9	B- 5G	CN3	A- 8B	S12	A- 11E		
C10	B- 5G	CN4	A- 20A	S13	A- 12E		
C11	B- 5G	CN5	A- 2E	S14	A- 14E		
C12	B- 5E			S15	A- 20D		
C13	B- 8J	K1	B- 9A	S16	A- 11D		

4.49 REEL MDA SCHEMATIC DIAGRAM

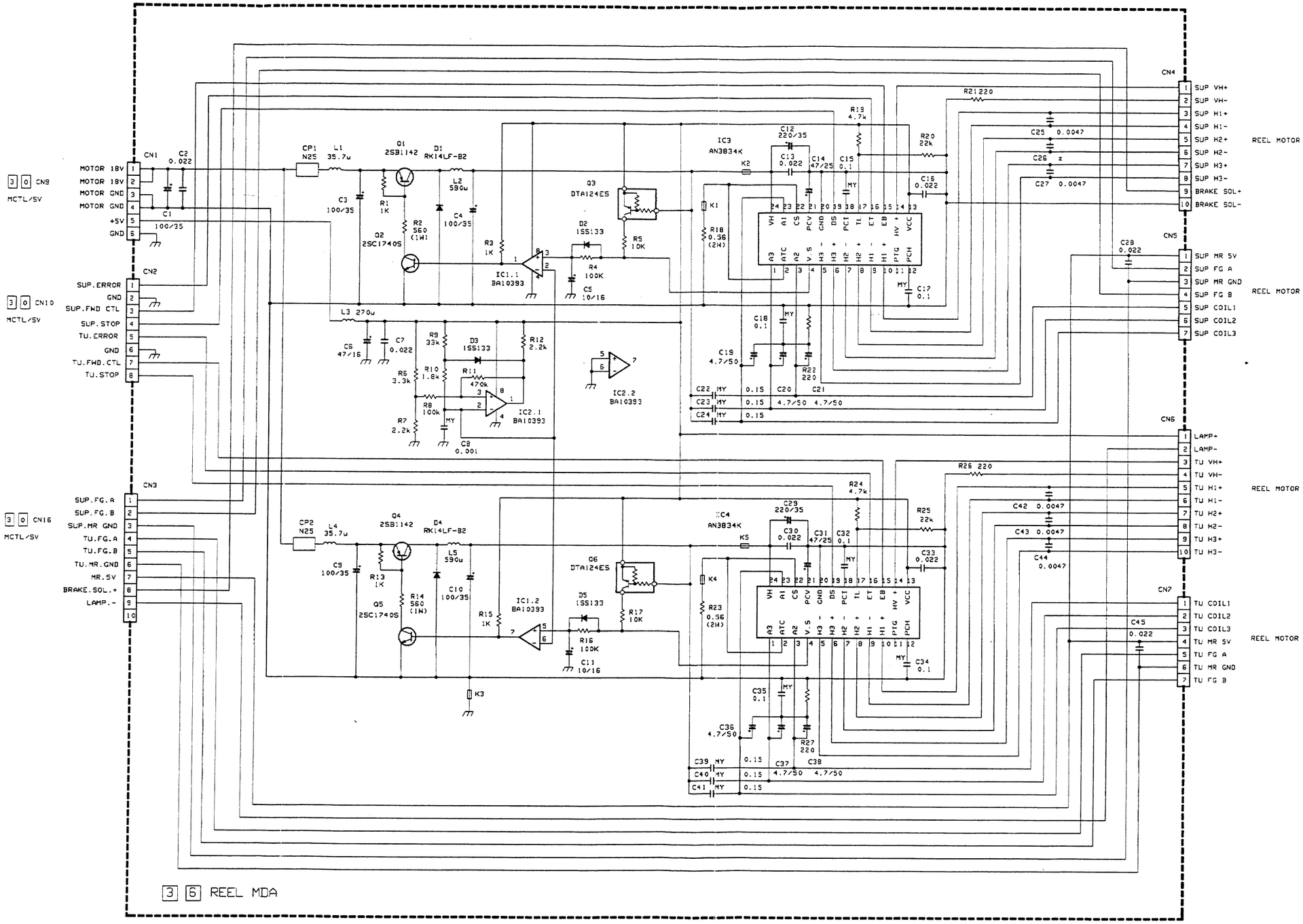

NOTE: UNLESS OTHERWISE SPECIFIED:
ALL RESISTANCE VALUES ARE IN OHMS. (1/6W)
ALL INDUCTANCE VALUES ARE IN H.

ALL CAPACITANCE VALUES ARE IN uF
ELECTROLYTIC
CERAMIC
MYLAR

	LAST NO.	VACANT NO.
IC	4	
Q	6	
D	5	
R	27	
C	45	
L	5	
CN	7	

4-94

4.50 REEL MDA CIRCUIT BOARD

— SIDE A —

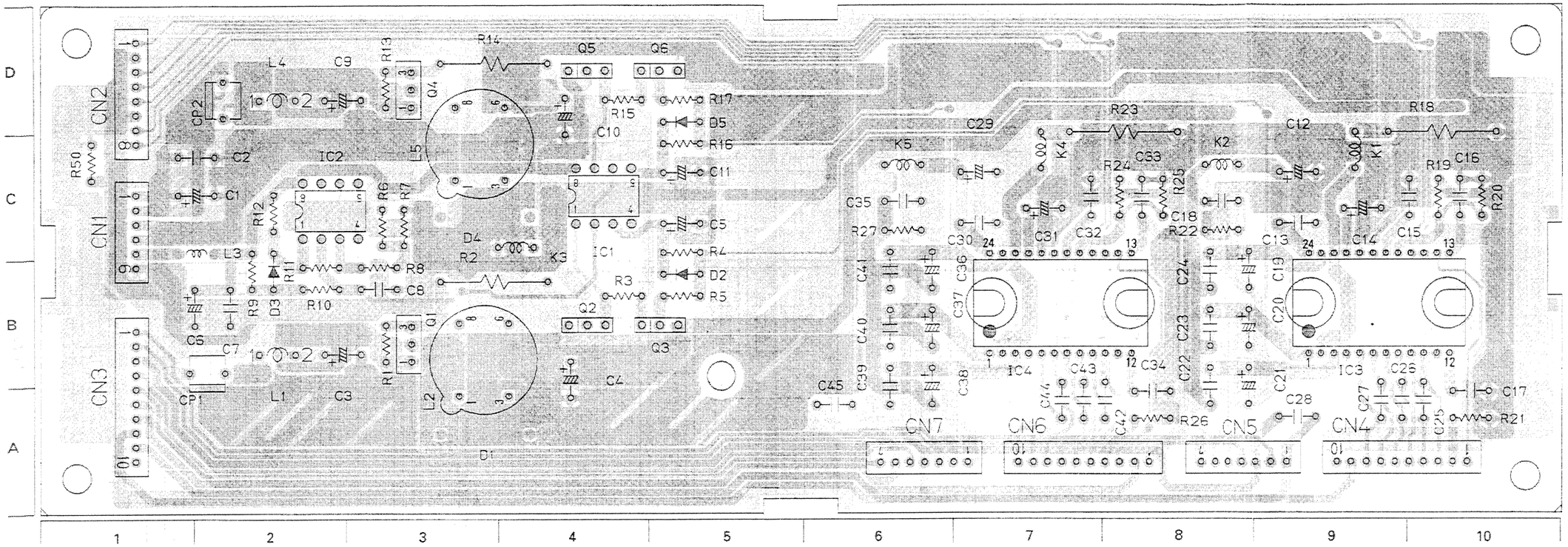

● ADDRESS TABLE OF BOARD PARTS

Side — A-1C — Y axis / X axis

Each address may have an address error by one interval.

IC1	A- 4C	R13	A- 3D	C14	A- 9C	C44	A- 7A
IC2	A- 2C	R14	A- 3D	C15	A- 10C	C45	A- 6A
IC3	A- 9B	R15	A- 4D	C16	A- 10C		
IC4	A- 7B	R16	A- 5C	C17	A- 10A	L1	A- 2B
		R17	A- 5D	C18	A- 8C	L2	A- 3B
Q1	A- 3B	R18	A- 9C	C19	A- 8C	L3	A- 1C
Q2	A- 4B	R19	A- 10C	C20	A- 8B	L4	A- 2D
Q3	A- 4B	R20	A- 10C	C21	A- 8B	L5	A- 3C
Q4	A- 3D	R21	A- 10A	C22	A- 8B		
Q5	A- 4D	R22	A- 8C	C23	A- 8B	CN1	A- 1C
Q6	A- 4D	R23	A- 7C	C24	A- 8C	CN2	A- 1D
		R24	A- 8C	C25	A- 10A	CN3	A- 1B
D1	A- 3A	R25	A- 8C	C26	A- 9A	CN4	A- 10A
D2	A- 5B	R26	A- 8A	C27	A- 9A	CN5	A- 9A
D3	A- 2C	R27	A- 6C	C28	A- 9A	CN6	A- 8A
D4	A- 3C	R50	A- 1C	C29	A- 7C	CN7	A- 7A
D5	A- 5D			C30	A- 7C		
		C1	A- 1C	C31	A- 7C	CP1	A- 1B
R1	A- 3B	C2	A- 1C	C32	A- 7C	CP2	A- 2D
R2	A- 3B	C3	A- 2B	C33	A- 8C		
R3	A- 4B	C4	A- 4B	C34	A- 8A	K1	A- 9C
R4	A- 5C	C5	A- 5C	C35	A- 6C	K2	A- 8C
R5	A- 5B	C6	A- 2B	C36	A- 6C	K3	A- 4C
R6	A- 3C	C7	A- 2B	C37	A- 6B	K4	A- 7C
R7	A- 3C	C8	A- 3B	C38	A- 6B	K5	A- 6C
R8	A- 3B	C9	A- 2D	C39	A- 6B		
R9	A- 2C	C10	A- 4D	C40	A- 6B		
R10	A- 2B	C11	A- 5C	C41	A- 6C		
R11	A- 2B	C12	A- 9C	C42	A- 8A		
R12	A- 2C	C13	A- 9C	C43	A- 7A		

4-95

4.51 REAR(REAR-1, REAR-2) SCHEMATIC DIAGRAMS

— REAR-1 —

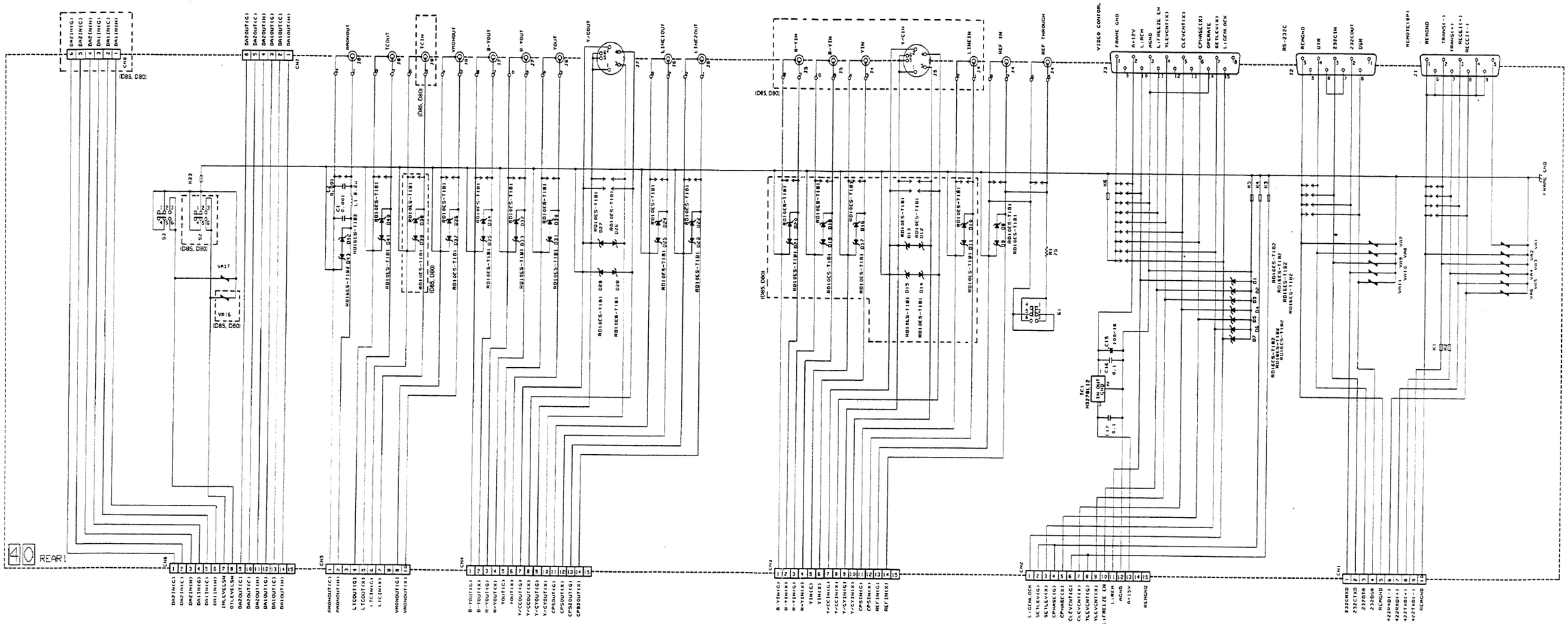

4-96

4.52 REAR(REAR-1, REAR-2) CIRCUIT BOARDS

— REAR-2 —

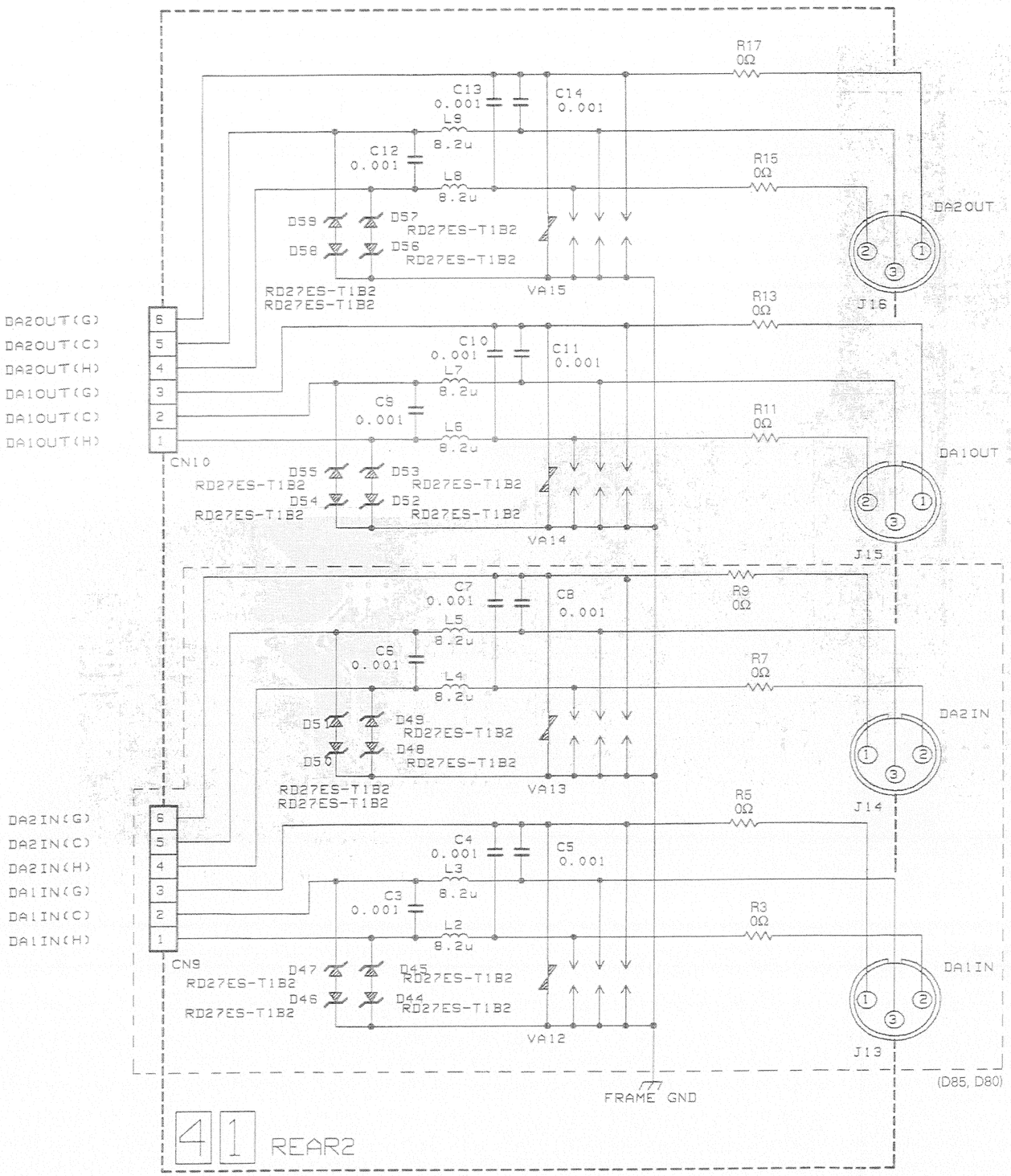

— REAR-2 —

— SIDE A —

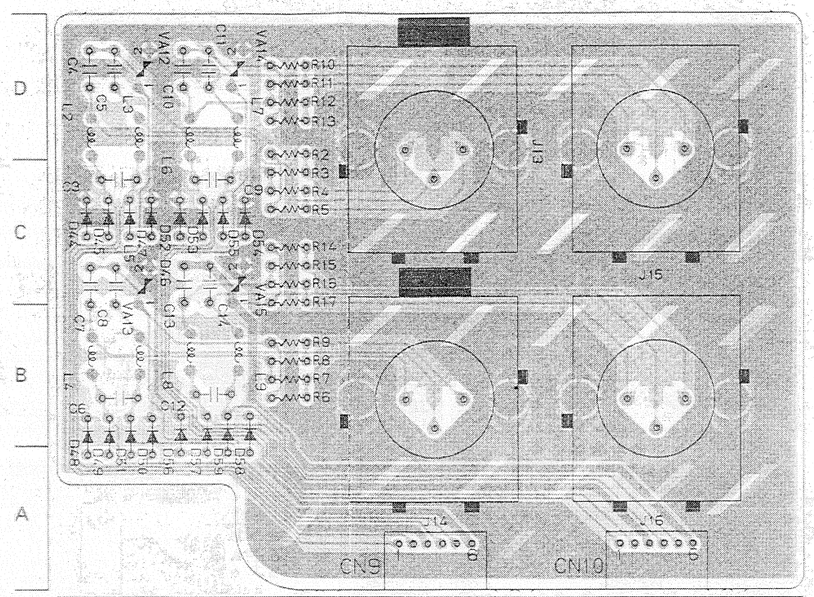

● **ADDRESS TABLE OF BOARD PARTS**

Each address may have an address error by one interval.

Side — A-1C — Y axis / X axis

D44	A- 1C	R15	A- 2C	J15	A- 4D		
D45	A- 1C	R16	A- 2C	J16	A- 4B		
D46	A- 1C	R17	A- 2B				
D47	A- 1C	C3	A- 1C	VA12	A- 1D		
D48	A- 1B	C4	A- 1D	VA13	A- 1B		
D49	A- 1B	C5	A- 1D	VA14	A- 2D		
D50	A- 1B	C6	A- 1B	VA15	A- 2B		
D51	A- 1B	C7	A- 1B				
D52	A- 1C	C8	A- 1B				
D53	A- 1C	C9	A- 1C				
D54	A- 2C	C10	A- 1D				
D55	A- 2C	C11	A- 2D				
D56	A- 1B	C12	A- 1B				
D57	A- 1B	C13	A- 1B				
D58	A- 2B	C14	A- 2B				
D59	A- 2B						
		L2	A- 1C				
R2	A- 2C	L3	A- 1C				
R3	A- 2C	L4	A- 1B				
R4	A- 2C	L5	A- 1B				
R5	A- 2C	L6	A- 1C				
R6	A- 2B	L7	A- 2C				
R7	A- 2B	L8	A- 1B				
R8	A- 2B	L9	A- 2B				
R9	A- 2B						
R10	A- 2D	CN9	A- 3A				
R11	A- 2D	CN10	A- 4A				
R12	A- 2D						
R13	A- 2D	J13	A- 3D				
R14	A- 2C	J14	A- 3B				

— REAR-1 —

— SIDE A —

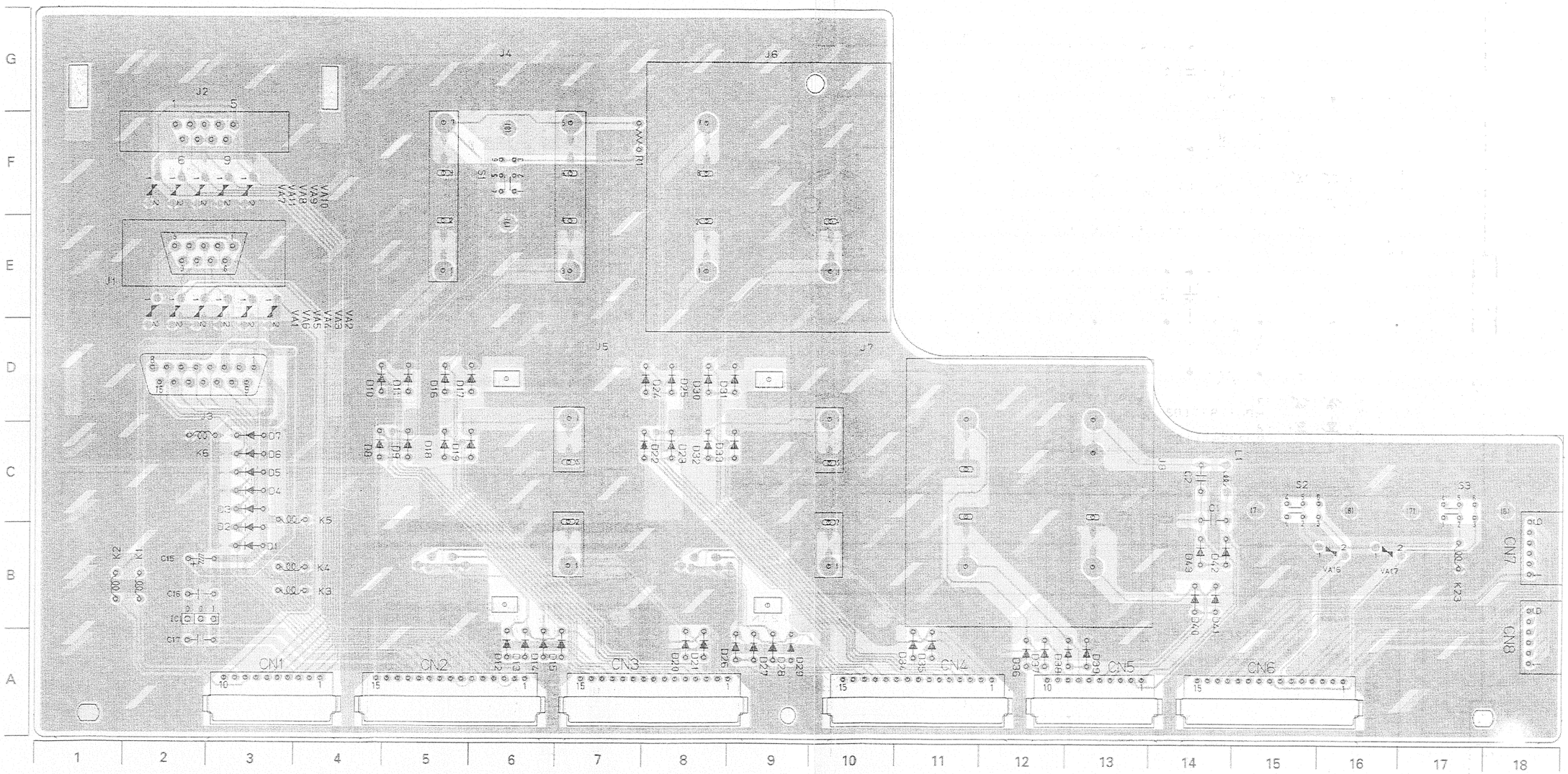

ADDRESS TABLE OF BOARD PARTS

Side — A-1C — Y axis / X axis

Each address may have an address error by one interval.

IC1	A- 2B	D15	A- 7B	D31	A- 9E	C1	A- 14C					K23	A- 17B	VA11	A- 2G
		D16	A- 5E	D32	A- 8D	C2	A- 14D	J1	A- 2F					VA16	A- 15C
D1	A- 3C	D17	A- 5E	D33	A- 9D	C15	A- 2B	J2	A- 2G			S1	A- 6G	VA17	A- 16C
D2	A- 3C	D18	A- 5D	D34	A- 11B	C16	A- 3B	J3	A- 2E			S2	A- 15C		
D3	A- 3C	D19	A- 5D	D35	A- 11B	C17	A- 3B	J4	A- 6F			S3	A- 17C		
D4	A- 3C	D20	A- 8B	D36	A- 12B			J5	A- 6C						
D5	A- 3C	D21	A- 8B	D37	A- 12B	L1	A- 14C	J6	A- 9F			VA1	A- 2E		
D6	A- 3D	D22	A- 7D	D38	A- 12B			J7	A- 9C			VA2	A- 3E		
D7	A- 3D	D23	A- 8D	D39	A- 13B	CN1	A- 4A	J8	A- 12C			VA3	A- 3E		
D8	A- 4D	D24	A- 7E	D40	A- 14B	CN2	A- 6A					VA4	A- 3E		
D9	A- 5D	D25	A- 8E	D41	A- 14B	CN3	A- 8A	K1	A- 2B			VA5	A- 2E		
D10	A- 4E	D26	A- 9B	D42	A- 14C	CN4	A- 12A	K2	A- 1B			VA6	A- 2E		
D11	A- 5E	D27	A- 9B	D43	A- 14C	CN5	A- 13A	K3	A- 4B			VA7	A- 2G		
D12	A- 6B	D28	A- 9B			CN6	A- 16A	K4	A- 4B			VA8	A- 2G		
D13	A- 6B	D29	A- 9B	R1	A- 7G	CN7	A- 18B	K5	A- 4C			VA9	A- 3G		
D14	A- 6B	D30	A- 8E			CN8	A- 18A	K6	A- 2D			VA10	A- 3G		

4-98

4_53 E. SENS/FLY E SCHEMATIC DIAGRAM

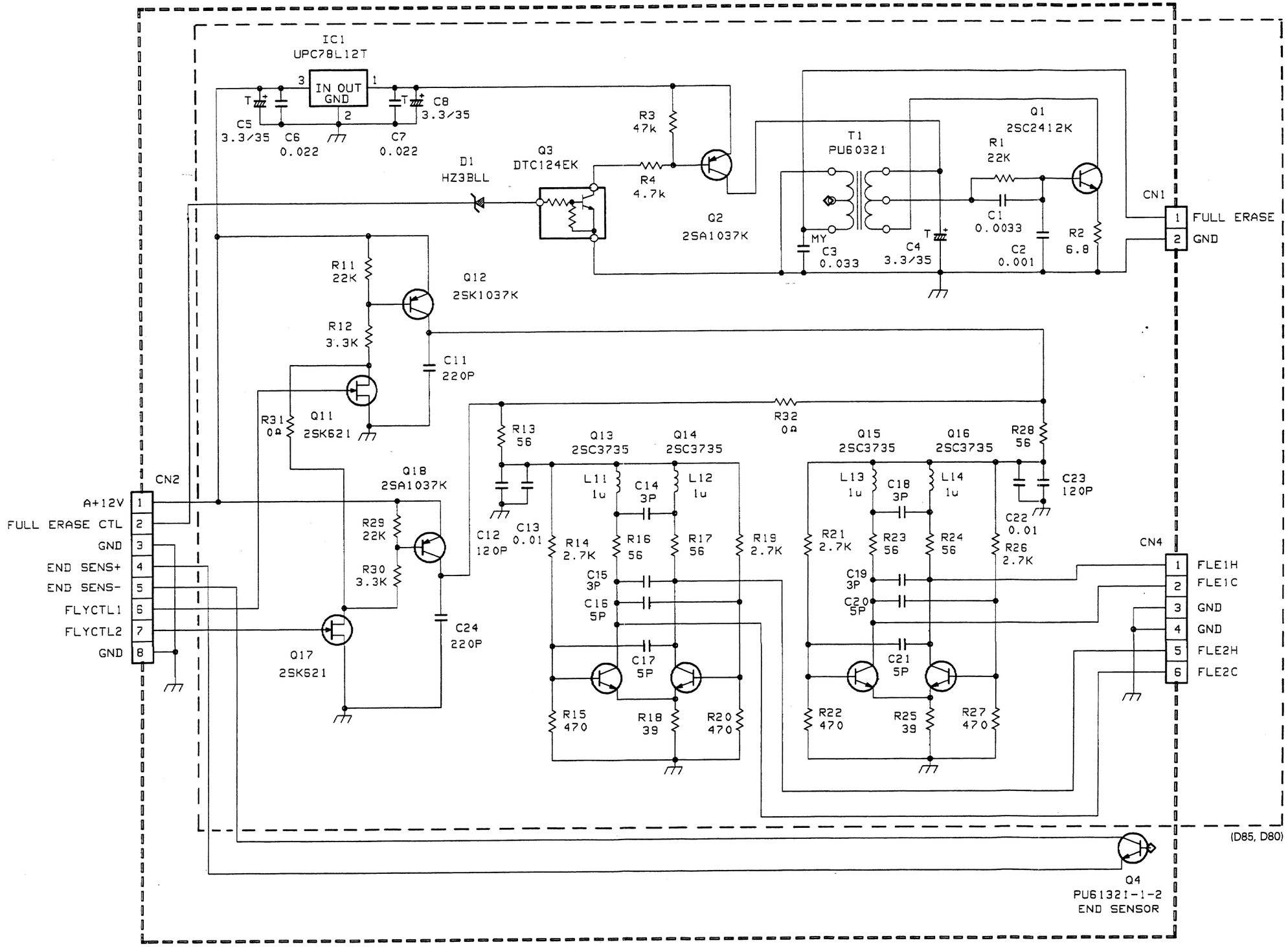

4.54 E. SENS/FLY E CIRCUIT BOARDS

— SIDE A —

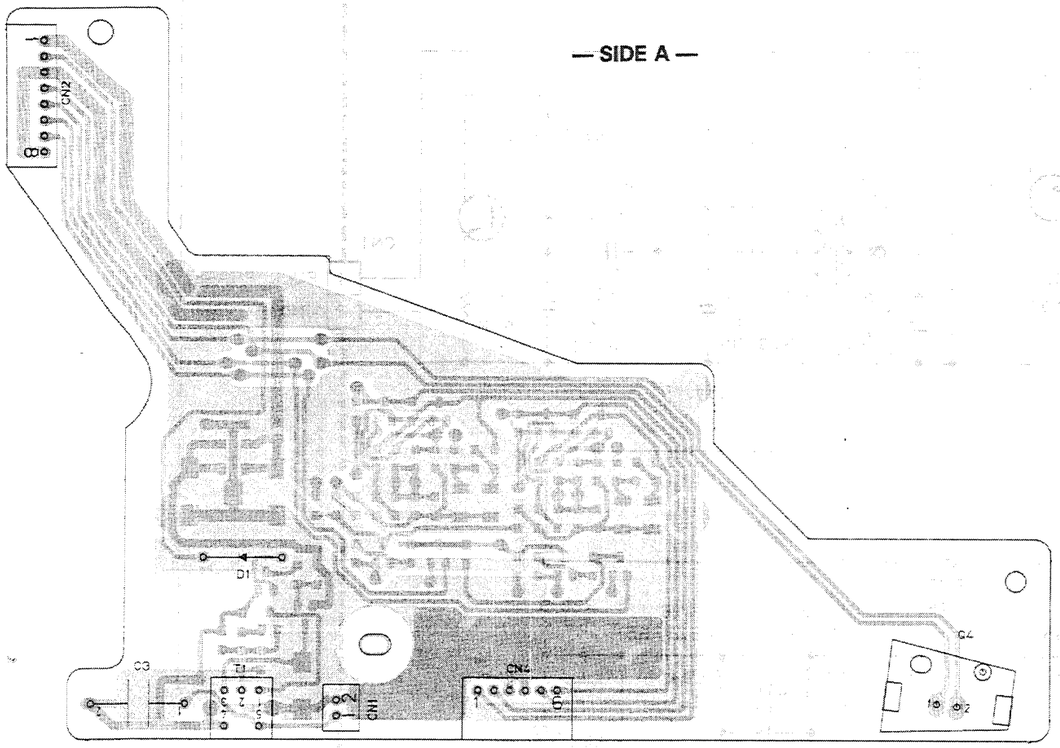

(E. SENS/FLY E)

— SIDE B —

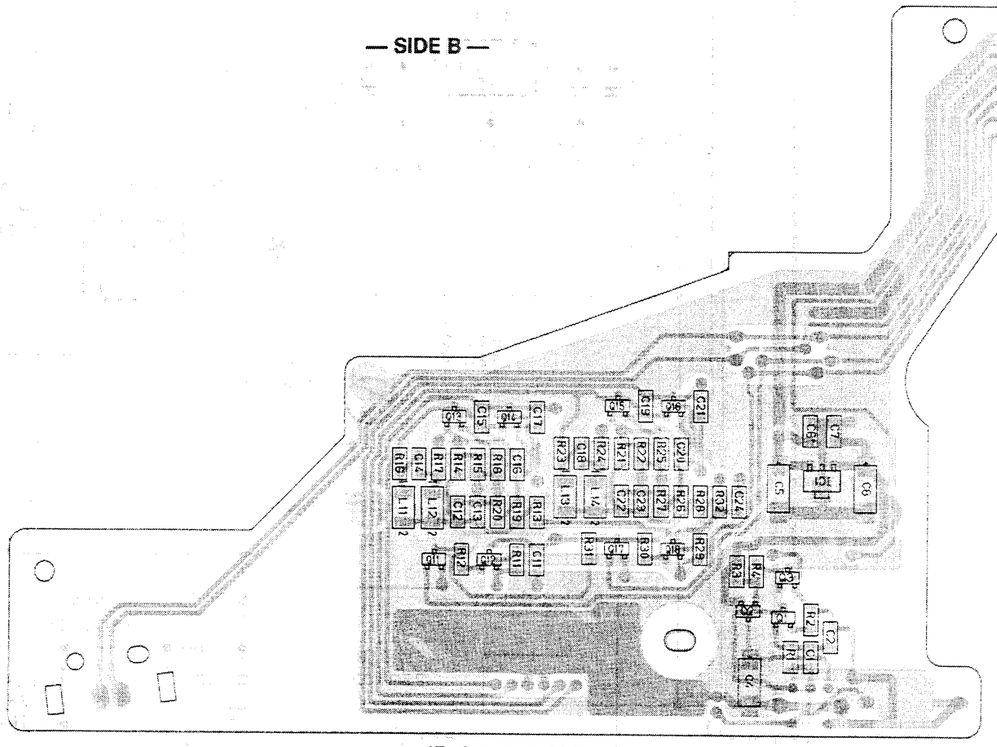

(E. SENS/FLY E)

— SIDE A —

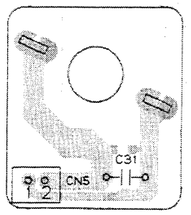

(MOTOR)

— SIDE B —

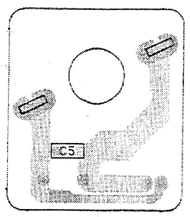

(MOTOR)

— SIDE A —

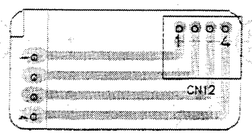

(W. SENSOR)

— SIDE A —

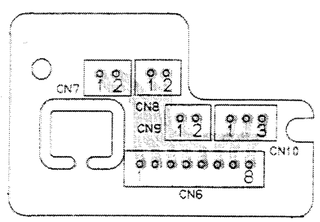

(MECHA TERMINAL)

— SIDE A —

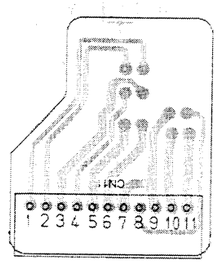

(A/C HEAD)

4-100

4.55 DIG I/O CIRCUIT BOARD BLOCK DIAGRAM (D85)

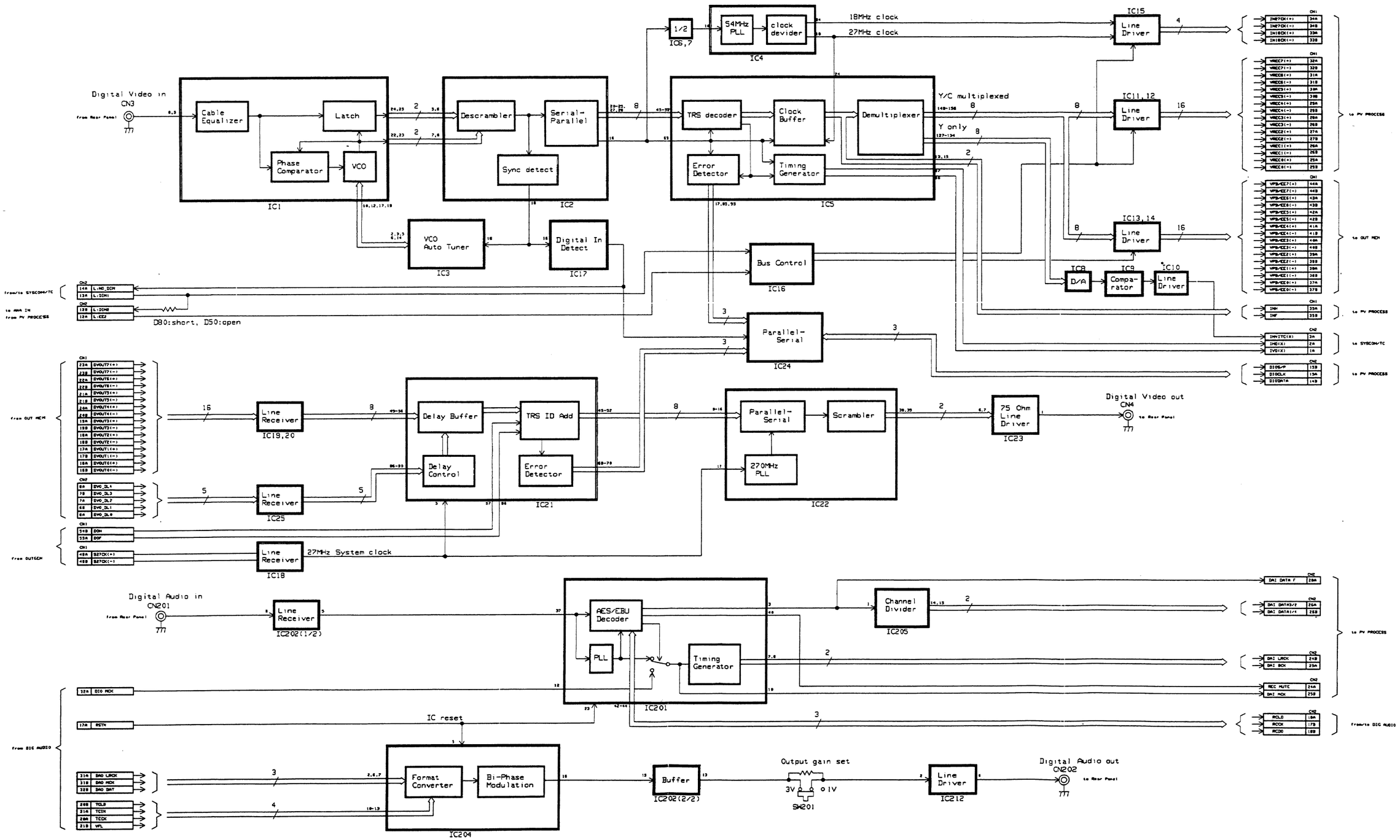

4-101

4.56 DIG I/O SCHEMATIC DIAGRAM (D85)

— DIAGRAM 1/3 —

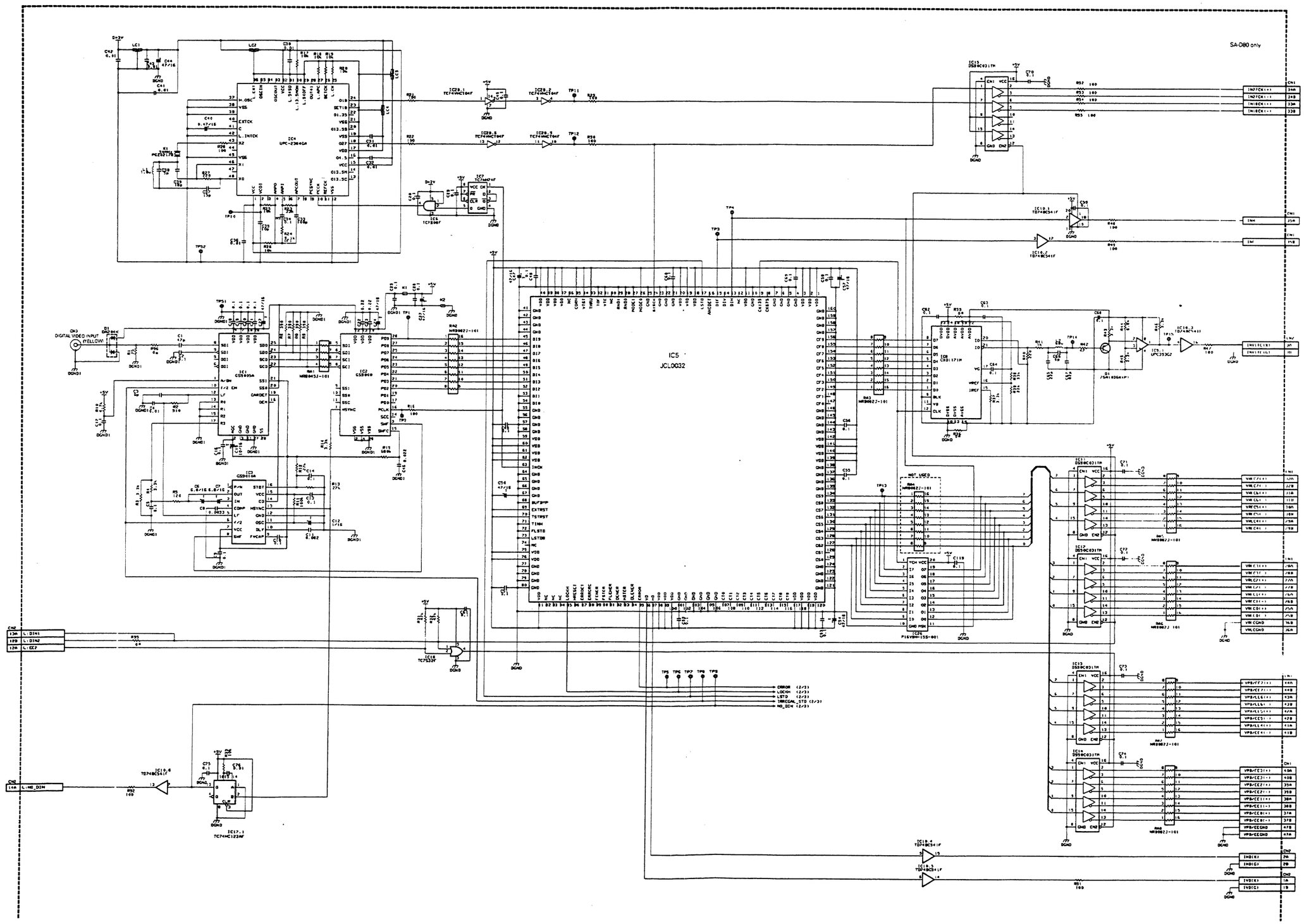

4-102

— DIAGRAM 2/3 —

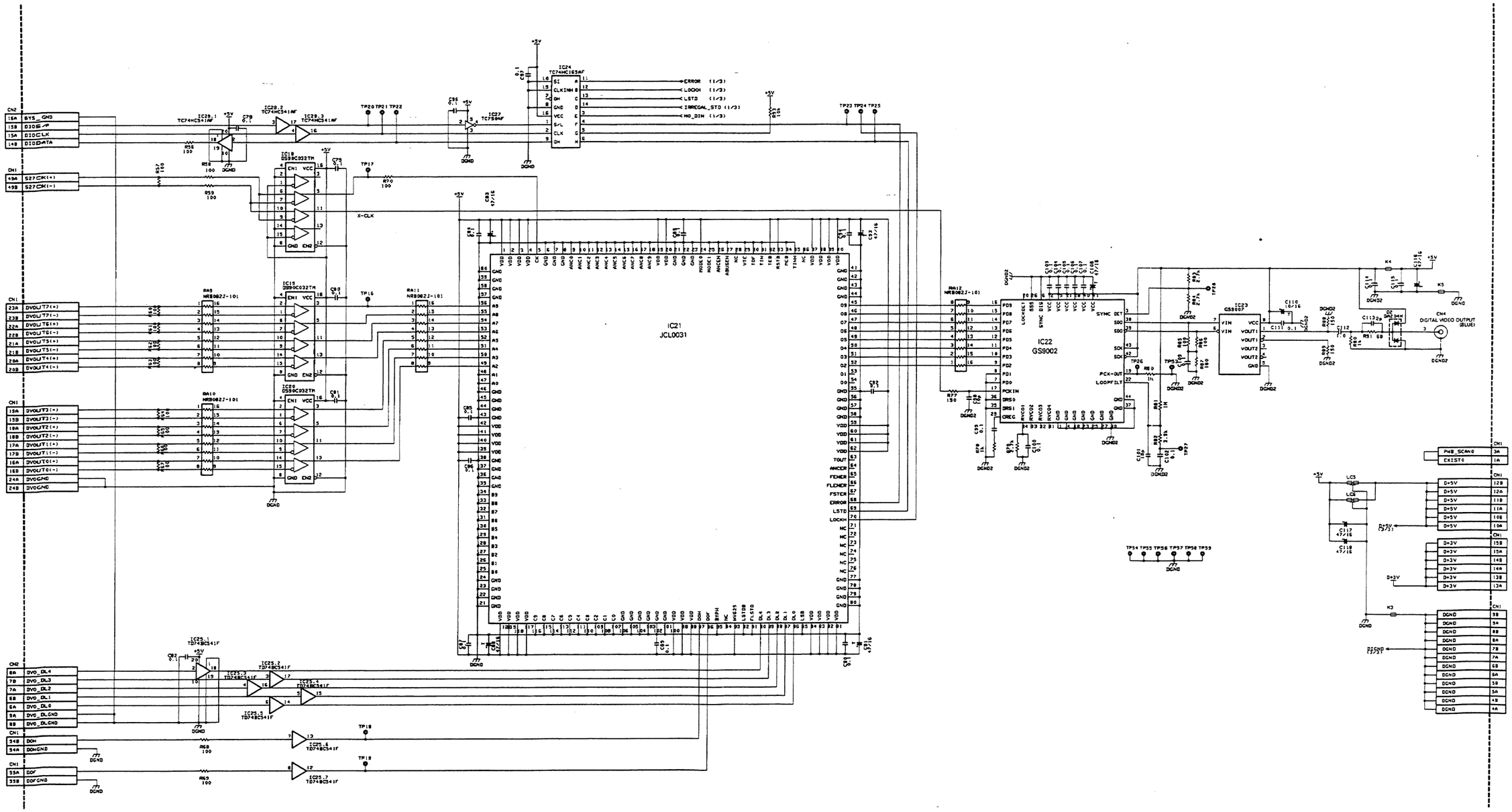
IC21
JCL0031
IC22
GS9002
X-CLK
ERROR (1/3)
LOCKH (1/3)
LSTD (1/3)
IRREGAL_STD (1/3)
NO_DIN (1/3)
DIGITAL VIDEO OUTPUT (BLUE)
DVOUT7(+)
DVOUT7(-)
DVOUT6(+)
DVOUT6(-)
DVOUT5(+)
DVOUT5(-)
DVOUT4(+)
DVOUT4(-)
DVOUT3(+)
DVOUT3(-)
DVOUT2(+)
DVOUT2(-)
DVOUT1(+)
DVOUT1(-)
DVOUT0(+)
DVOUT0(-)
DVOGND
DVO_DL4
DVO_DL3
DVO_DL2
DVO_DL1
DVO_DL0
DVO_DLGND
DOH
DOHGND
DDF
DDFGND
S27CK(+)
S27CK(-)
SYS_GND
DIOSYP
DIOCLK
DIODATA
PWB_SCAN0
EXIST0
D+5V
D+3V
DGND

— DIAGRAM 3/3 —

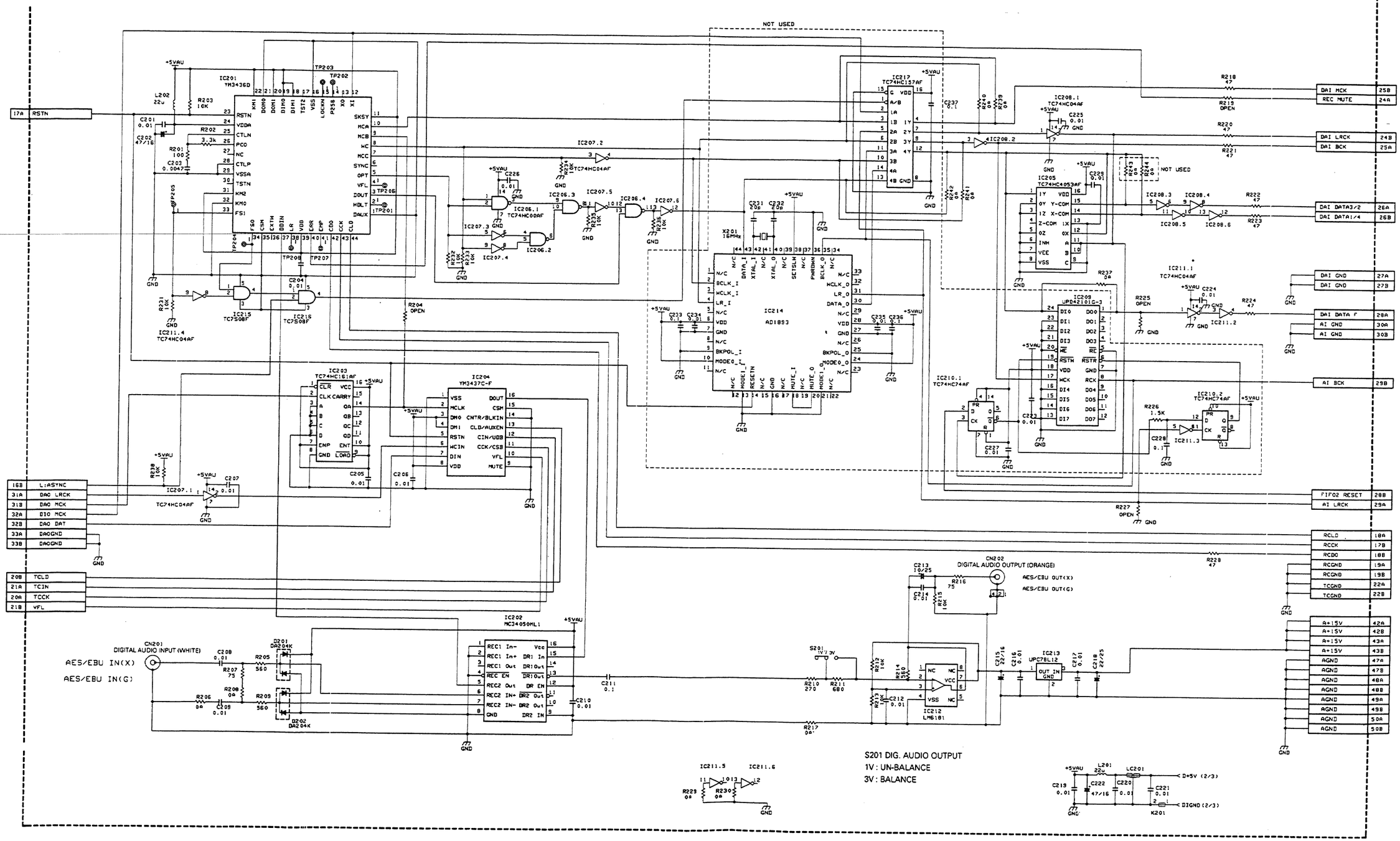

4-104

4.57 DIG I/O CIRCUIT BOARD (D85)

— SIDE A —

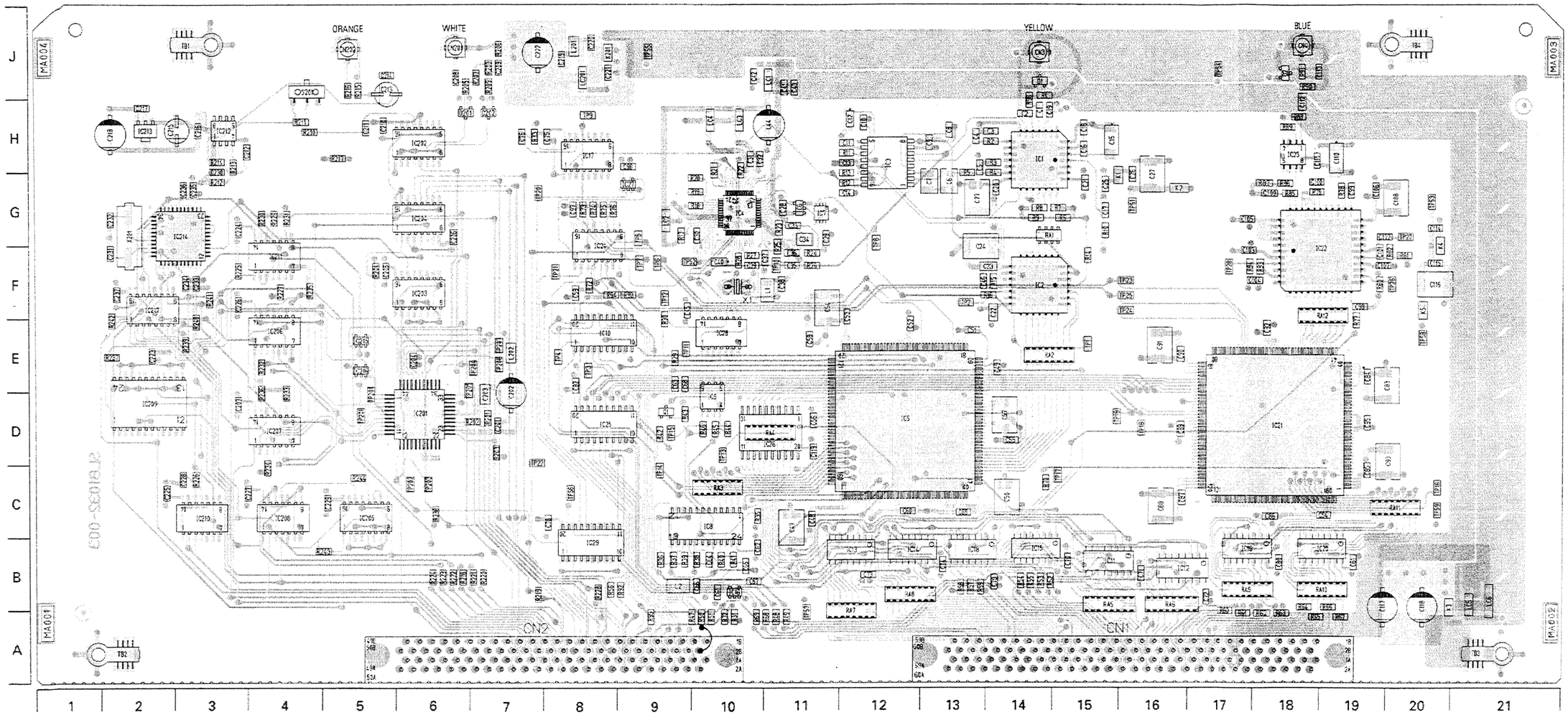

ADDRESS TABLE OF BOARD PARTS

Side A-1C (Y axis, X axis)

Each address may have an address error by one interval.

IC1	A- 14H	IC29	A- 8C	R3	A- 14H	R31	A- 10B	R60	A- 17B	R89	A- 18H	R221	A- 6C	C4	A- 13H	C32	A- 10H	C60	A- 12D	C88	A- 16D	C116	A- 20F	C225	A- 2D	TP10	A- 11F	TP201	A- 5E	LC6	A- 20B
IC2	A- 14F	IC201	A- 6E	R4	A- 14G	R32	A- 10B	R61	A- 17B	R90	A- 18J	R222	A- 6C	C5	A- 13H	C33	A- 11G	C61	A- 10C	C89	A- 16D	C117	A- 19B	C226	A- 3F	TP11	A- 9E	TP202	A- 6D	LC201	A- 8J
IC3	A- 12G	IC202	A- 5H	R5	A- 13G	R33	A- 7H	R62	A- 17B	R91	A- 18J	R223	A- 6C	C6	A- 13G	C34	A- 11G	C62	A- 10C	C90	A- 16E	C118	A- 20B	C227	A- 3D	TP12	A- 9F	TP203	A- 6D		
IC4	A- 10G	IC203	A- 5F	R6	A- 15G	R35	A- 10C	R63	A- 18B	R92	A- 8C	R224	A- 6C	C7	A- 13G	C35	A- 11F	C63	A- 9E	C91	A- 16E	C119	A- 11D	C228	A- 2D	TP13	A- 10D	TP204	A- 6E	RA1	A- 14G
IC5	A- 12E	IC204	A- 5G	R7	A- 15G	R36	A- 9C	R64	A- 18B	R93	A- 9F	R225	A- 3F	C8	A- 13H	C36	A- 11G	C64	A- 10C	C92	A- 17F	C201	A- 7E	C229	A- 4D	TP14	A- 9D	TP205	A- 6E	RA2	A- 14E
IC6	A- 11G	IC205	A- 5C	R8	A- 14G	R37	A- 9C	R65	A- 18B	R94	A- 8F	R226	A- 3D	C9	A- 13H	C37	A- 10F	C65	A- 10C	C93	A- 19D	C202	A- 7E	C230	A- 3H	TP15	A- 9D	TP206	A- 5E	RA3	A- 10D
IC7	A- 11G	IC206	A- 3F	R9	A- 14G	R38	A- 10C	R66	A- 18B	R95	A- 9B	R227	A- 4F	C10	A- 12H	C38	A- 11F	C66	A- 10C	C94	A- 18C	C203	A- 7E	C231	A- 1G	TP16	A- 20D	TP207	A- 7E	RA4	A- 11D
IC8	A- 10C	IC207	A- 3D	R10	A- 15G	R39	A- 9C	R67	A- 18B	R96	A- 14H	R228	A- 8C	C11	A- 12H	C39	A- 10F	C67	A- 10C	C95	A- 19E	C204	A- 6E	C232	A- 1G	TP17	A- 15D	TP208	A- 7E	RA5	A- 15B
IC9	A- 10E	IC208	A- 4C	R11	A- 12H	R40	A- 10C	R68	A- 10B	R201	A- 7E	R229	A- 4G	C12	A- 12H	C40	A- 10F	C68	A- 9E	C96	A- 9H	C205	A- 5F	C233	A- 3F	TP18	A- 16E			RA6	A- 16B
IC10	A- 8F	IC209	A- 2E	R12	A- 12G	R41	A- 10C	R69	A- 10B	R202	A- 6E	R230	A- 4G	C13	A- 12H	C41	A- 11J	C69	A- 13C	C97	A- 8G	C206	A- 6G	C234	A- 2F	TP19	A- 15E	CN1	A- 16A	RA7	A- 12B
IC11	A- 15C	IC210	A- 2C	R13	A- 12G	R42	A- 9D	R70	A- 14D	R203	A- 7D	R231	A- 4G	C14	A- 12G	C42	A- 10J	C70	A- 15C	C98	A- 19F	C207	A- 3E	C235	A- 3G	TP20	A- 7G	CN2	A- 8A	RA8	A- 12C
IC12	A- 16C	IC211	A- 3G	R14	A- 15G	R43	A- 9E	R72	A- 8F	R204	A- 5F	R232	A- 4E	C15	A- 15H	C43	A- 11J	C71	A- 16C	C99	A- 19G	C208	A- 6J	C236	A- 2G	TP21	A- 9F	CN3	A- 14J	RA9	A- 17C
IC13	A- 12C	IC212	A- 3H	R15	A- 14F	R44	A- 10D	R73	A- 8G	R205	A- 6J	R233	A- 4E	C16	A- 15H	C44	A- 11H	C72	A- 16B	C100	A- 18G	C209	A- 7J	C237	A- 2F	TP22	A- 7D	CN4	A- 18J	RA10	A- 18C
IC14	A- 13C	IC213	A- 2H	R16	A- 14F	R45	A- 10D	R74	A- 8G	R206	A- 7J	R234	A- 4D	C17	A- 15G	C45	A- 9F	C73	A- 12C	C101	A- 19G	C210	A- 5H			TP23	A- 15F	CN201	A- 6J	RA11	A- 19D
IC15	A- 15C	IC214	A- 2G	R17	A- 9G	R46	A- 10D	R75	A- 8G	R207	A- 6J	R235	A- 4F	C18	A- 15H	C46	A- 14F	C74	A- 13C	C102	A- 19G	C211	A- 5H	L1	A- 11F	TP24	A- 15F	CN202	A- 5J	RA12	A- 18F
IC16	A- 10C	IC215	A- 5E	R18	A- 10G	R47	A- 9B	R76	A- 8G	R208	A- 7J	R236	A- 4E	C19	A- 14H	C47	A- 11C	C75	A- 7H	C103	A- 17G	C212	A- 3H	L2	A- 9C	TP25	A- 15F				
IC17	A- 8H	IC216	A- 5E	R19	A- 10G	R48	A- 11B	R77	A- 19F	R209	A- 7J	R237	A- 1E	C20	A- 14G	C48	A- 11C	C76	A- 7H	C104	A- 17F	C213	A- 5H	L201	A- 8J	TP26	A- 19F	K1	A- 15G	S201	A- 4J
IC18	A- 14C	IC217	A- 2F	R20	A- 10G	R49	A- 11B	R78	A- 18G	R210	A- 4H	R238	A- 6C	C21	A- 15G	C49	A- 14E	C77	A- 13G	C105	A- 17G	C214	A- 5J	L202	A- 7E	TP27	A- 19G	K2	A- 16G		
IC19	A- 17C			R21	A- 10H	R50	A- 10B	R79	A- 18G	R211	A- 4H	R239	A- 2E	C22	A- 14F	C50	A- 14D	C78	A- 7C	C106	A- 19G	C215	A- 2H			TP28	A- 17F	K3	A- 20B	TB1	A- 3J
IC20	A- 18C	Q1	A- 9E	R22	A- 10H	R51	A- 10B	R80	A- 19F	R212	A- 3G	R240	A- 3F	C23	A- 14F	C51	A- 13F	C79	A- 14C	C107	A- 19F	C216	A- 3H	TP1	A- 15E	TP51	A- 16G	K4	A- 20G	TB2	A- 1B
IC21	A- 17E			R23	A- 11G	R52	A- 14C	R81	A- 19G	R213	A- 3H	R241	A- 3F	C24	A- 13G	C52	A- 12F	C80	A- 18C	C108	A- 19G	C217	A- 2H	TP2	A- 13F	TP52	A- 9F	K5	A- 20F	TB3	A- 21B
IC22	A- 18G	D1	A- 14J	R24	A- 11G	R53	A- 14C	R82	A- 19G	R214	A- 3H	R242	A- 1F	C25	A- 15G	C53	A- 12F	C81	A- 19C	C109	A- 17G	C218	A- 1H	TP3	A- 8E	TP53	A- 20G	K201	A- 8J	TB4	A- 19J
IC23	A- 18H	D2	A- 18J	R25	A- 11G	R54	A- 14C	R83	A- 17F	R215	A- 5H	R243	A- 4C	C26	A- 16G	C54	A- 11F	C82	A- 8E	C110	A- 18H	C219	A- 8J	TP4	A- 8E	TP54	A- 17J				
IC24	A- 8G	D201	A- 6H	R26	A- 11F	R55	A- 14C	R84	A- 17F	R216	A- 5H	R244	A- 5D	C27	A- 16G	C55	A- 14D	C83	A- 19E	C111	A- 18H	C220	A- 8J	TP5	A- 9G	TP55	A- 9J	LC1	A- 11J	X1	A- 10F
IC25	A- 8E	D202	A- 7H	R27	A- 10G	R56	A- 8C	R85	A- 18G	R217	A- 5H			C28	A- 11G	C56	A- 11E	C84	A- 19E	C112	A- 18H	C221	A- 8J	TP6	A- 9F	TP56	A- 8D	LC2	A- 9G	X201	A- 2G
IC26	A- 11D			R28	A- 10F	R57	A- 13C	R86	A- 18G	R218	A- 6C	C1	A- 14H	C29	A- 11G	C57	A- 14E	C85	A- 19D	C113	A- 18J	C222	A- 7J	TP7	A- 9F	TP57	A- 11B	LC3	A- 10H		
IC27	A- 9G	R1	A- 14H	R29	A- 9E	R58	A- 13C	R87	A- 17G	R219	A- 7C	C2	A- 14H	C30	A- 10G	C58	A- 11F	C86	A- 16D	C114	A- 20G	C223	A- 2E	TP8	A- 12G	TP58	A- 20F	LC4	A- 10H		
IC28	A- 10F	R2	A- 14H	R30	A- 9F	R59	A- 13C	R88	A- 18H	R220	A- 7C	C3	A- 14H	C31	A- 10H	C59	A- 9F	C87	A- 16D	C115	A- 20F	C224	A- 3G	TP9	A- 8H	TP59	A- 20D	LC5	A- 20B		

4-105

SCHEMATIC DIAGRAM OF ICs

■ ADC1034CIWM 【NATIONAL SEMICONDUCTOR】
(10 Bit Serial I/O A/D Cnverters with Analog Multiplexer and Track/Hold Function)

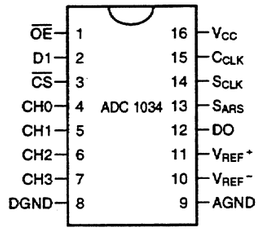

Top View

■ AN3834K 【MATSUSHITA】
(VTR Reel Motor Drive)

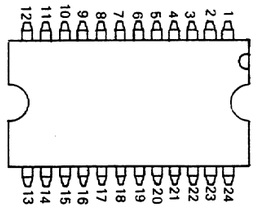

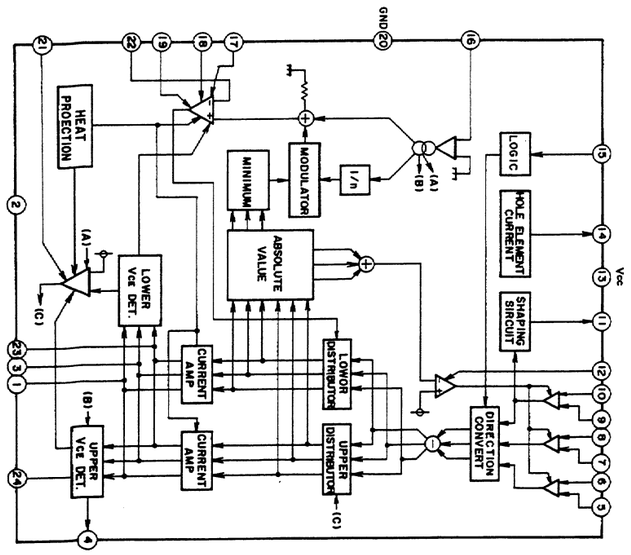

■ AK5340-VS 【ASAHIKASEI】
(18 bit 2ch A/D Converter)

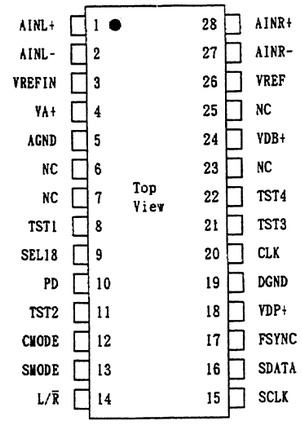

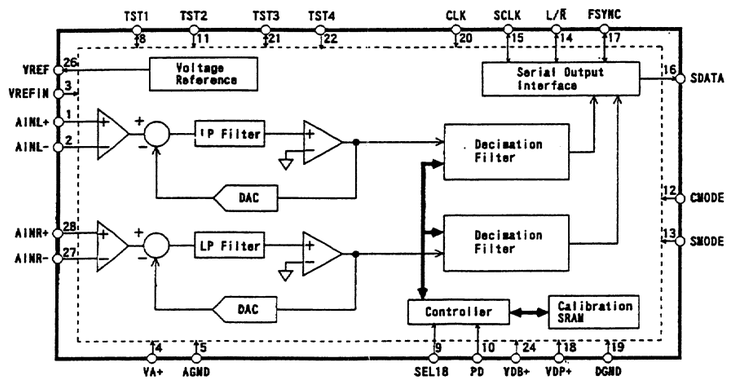

■ BA10339F 【ROHM】
(Quad Comparator)

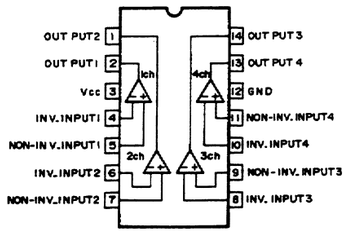

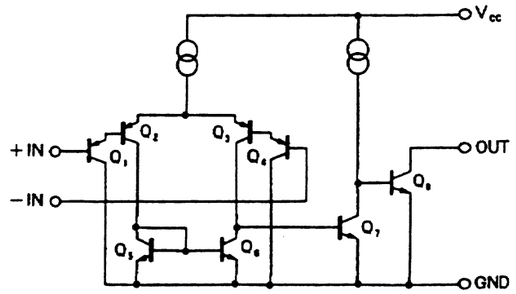

■ AN77L03M 【MATSUSHITA】
(Voltage Regulator)

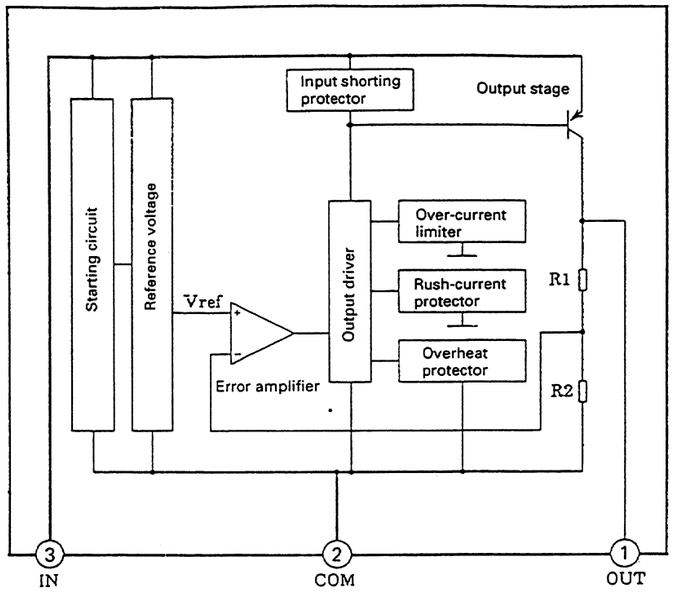

■ BA10358F 【ROHM】
(Dual Ground Sense Op.Amp)

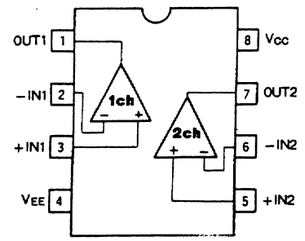

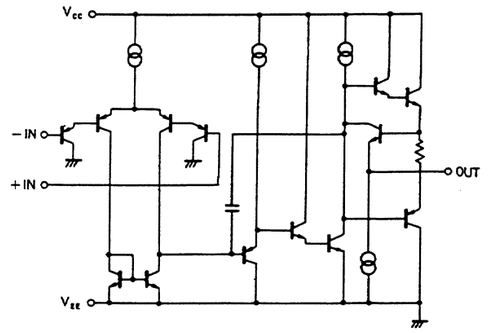

■ BA10393F 【ROHM】
(Dual Comparator)

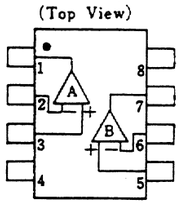

Pin
1. A OUTPUT
2. A−INPUT
3. A+INPUT
4. V⁻
5. B+INPUT
6. B−INPUT
7. B OUTPUT
8. V⁺

■ BA7043FS 【ROHM】
(VTR Auto Tracking Interface)

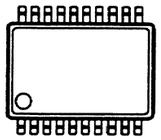

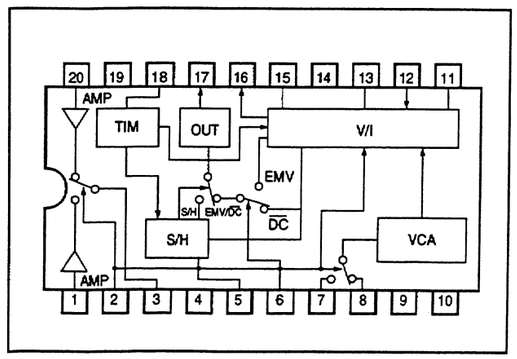

■ BA6441FP 【ROHM】
(Motor Driver)

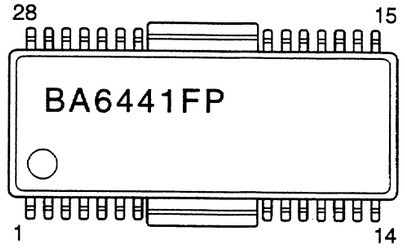

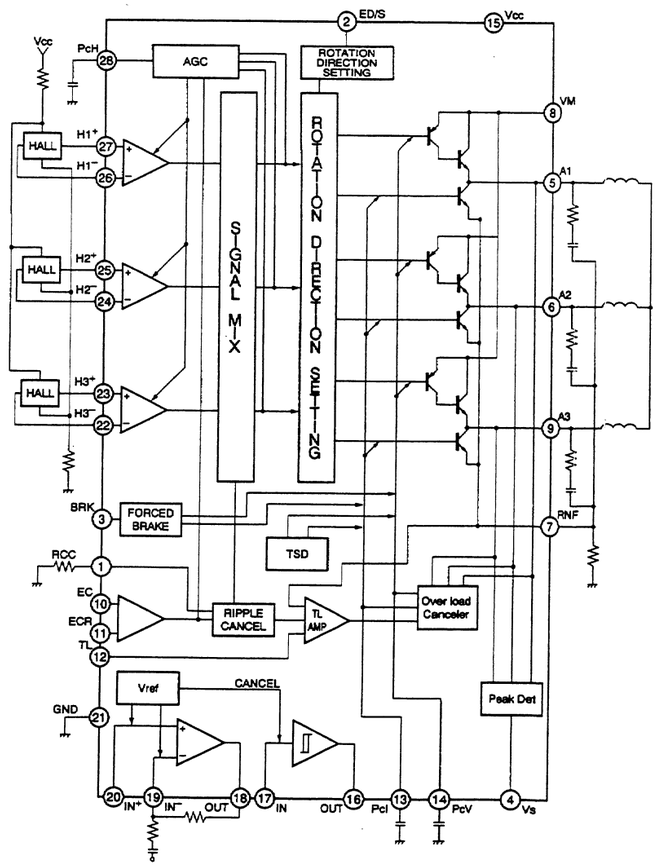

■ BR24C01AF 【ROHM】
(IIC Bus 1k Serial EEPROM)

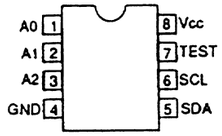

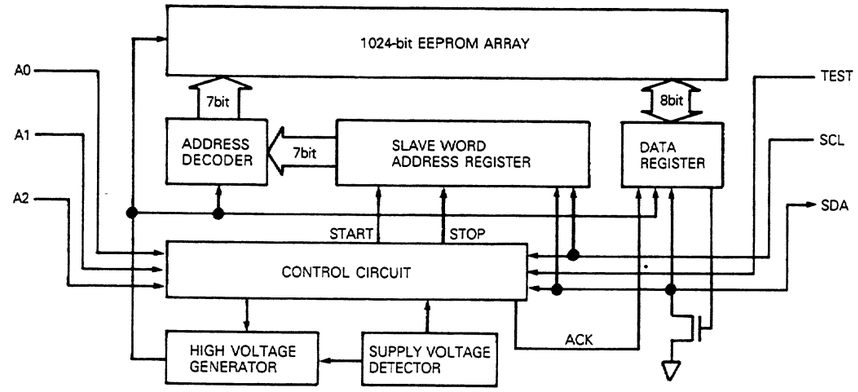

■ BR24C02F 【ROHM】
(IIC Bus 2k Serial EEPROM)

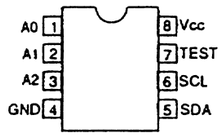

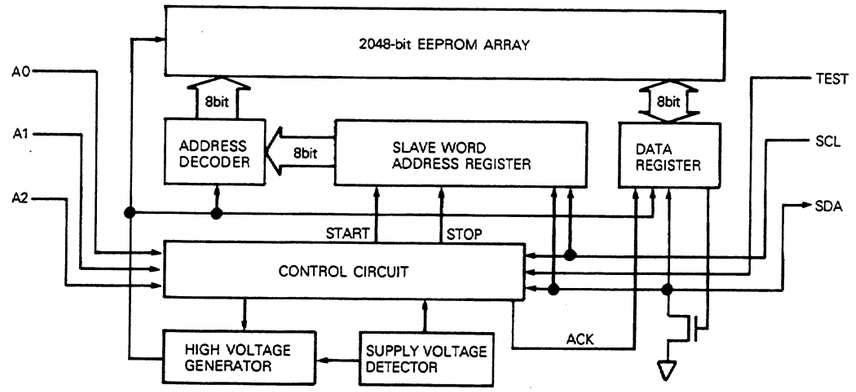

■ BR24C04F 【ROHM】
(IIC Bus 2K Serial EEPROM)

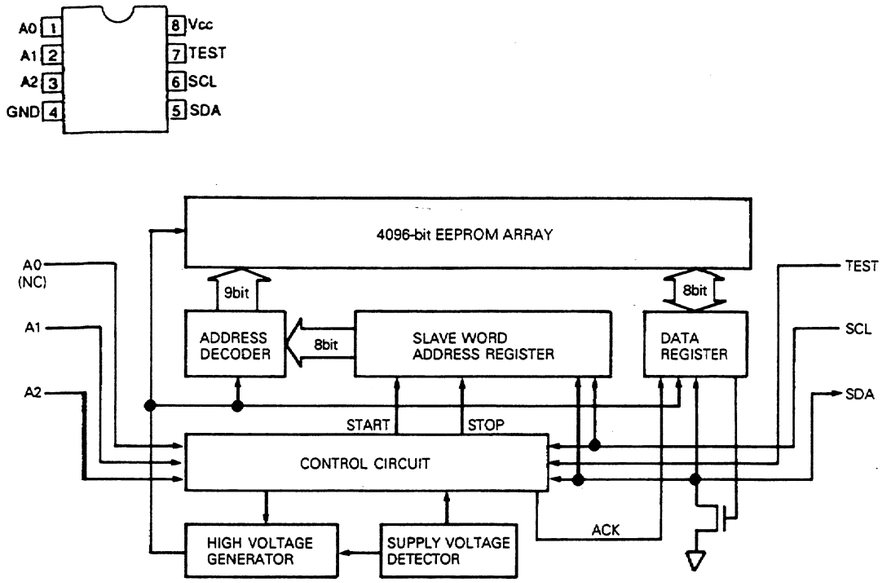

■ CLC401AJE 【COMLINEAR】
(Current Feedback Op.Amp.)

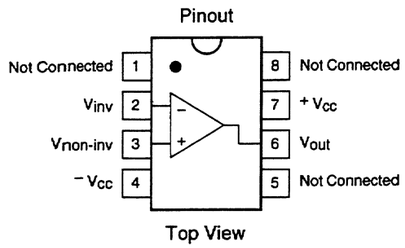

■ CLC520AJE 【COMLINEAR】
(AGC Amp.)

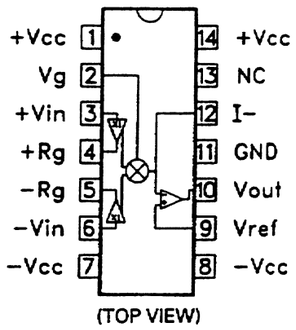

■ CXA1211M 【SONY】
(Electric Volume)

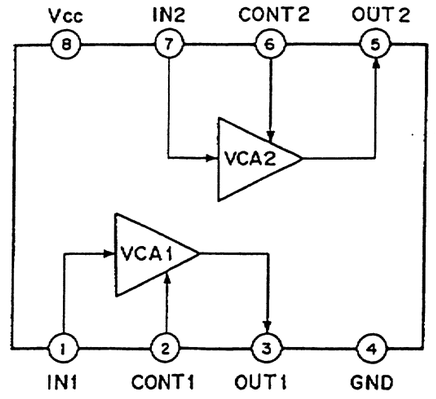

■ CXD1171M 【SONY】
(8 Bit 40MSPS D/A Converter)

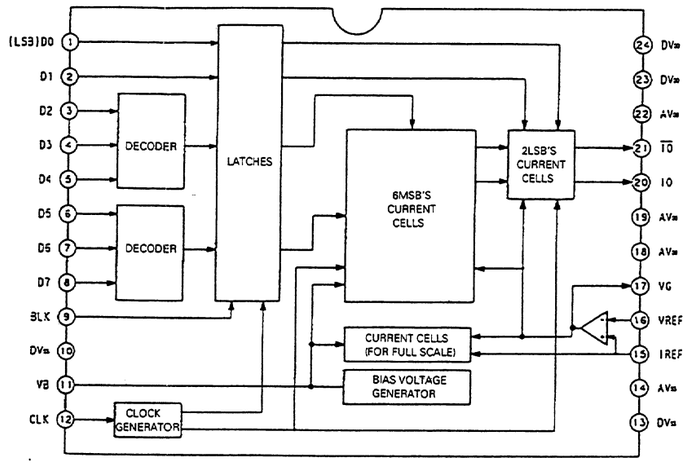

■ CXD1175AM 【SONY】
(8-Bit 20MSPS Video A/D Converter)

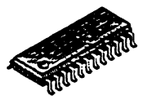

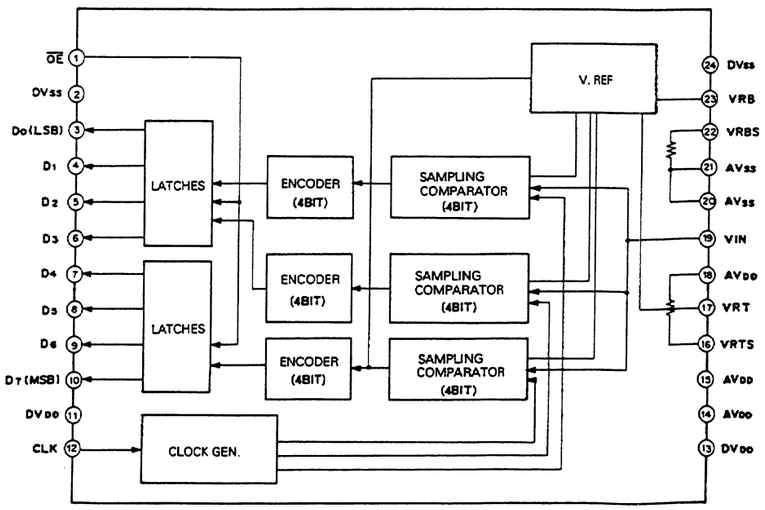

■ CXD1177Q 【SONY】
(8-Bit 40MSPS Y/C 2-channel D/A Converter)

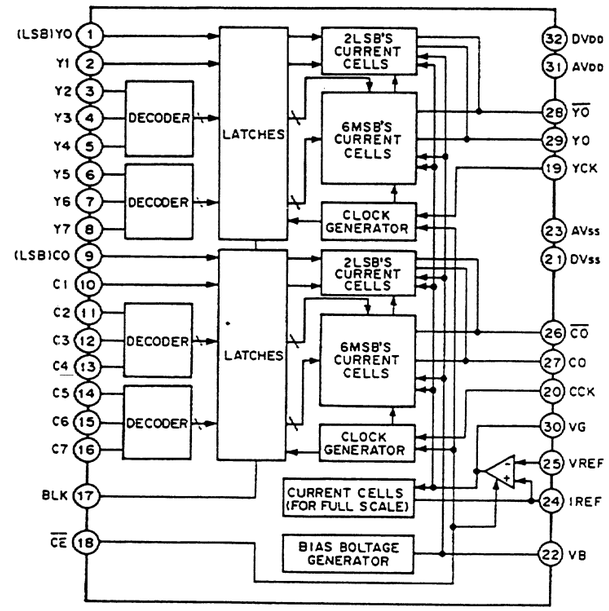

■ CXD1216M 【SONY】
(Gen Lock)

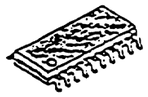

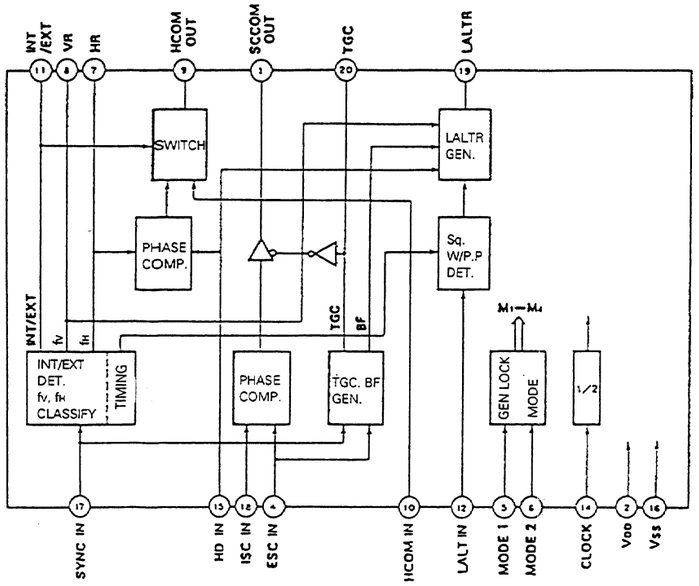

■ DS90C031TM 【NATIONAL SEMICONDUCTOR】
(LVDS Quad CMOS Differential Line Driver)

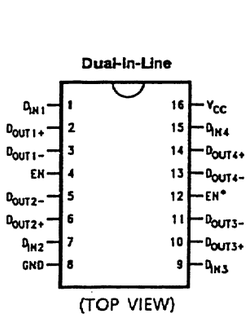

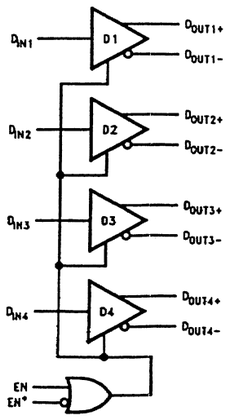

DRIVER

Enables		Input	Outputs	
EN	EN*	D_{IN}	D_{OUT+}	D_{OUT-}
L	H	X	Z	Z
All other combinations of ENABLE inputs		L	L	H
		H	H	L

■ CXD1217M 【SONY】
(Synchronizing Signal Generator for Video Camera)

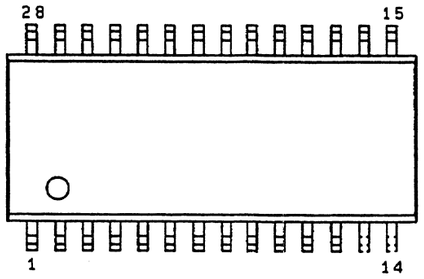

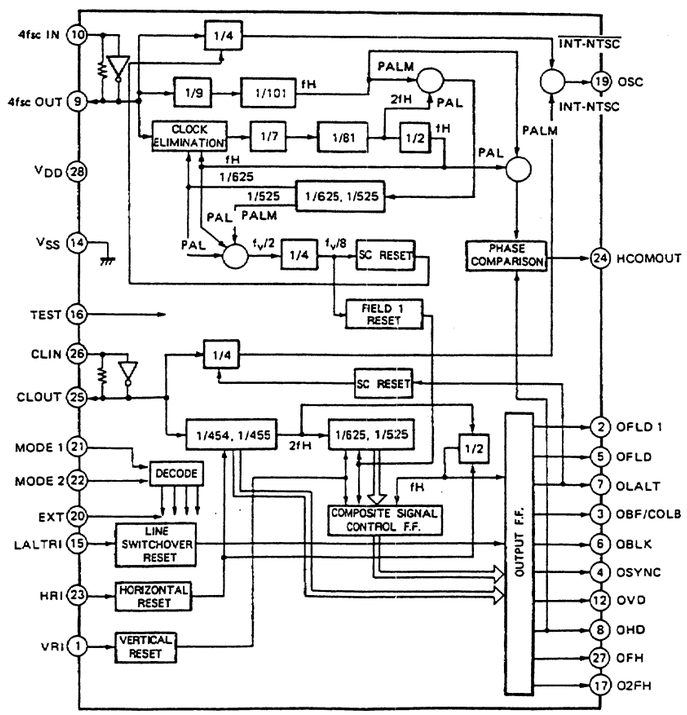

Note : Pin 19 output is (a) a signal based on Pin 26 in INT mode at NTSC.
(b) each signal is based on Pin 10 in other modes.

Pin Description

Pin No.	Symbol	I/O	Description
1	VRI	I	Vertical reset signal
2	OFLD1	O	First field output
3	OBF/COLB	O	Burst flag/color blanking output
4	OSYNC	O	Composite sync output
5	OFLD	O	Even and Odd output
6	OBLK	O	Composite blanking output
7	OLALT	O	Line alternate output
8	OHD	O	Horizontal drive output
9	4fscOUT	O	4fsc output
10	4fscIN	I	4fsc input
11	NC	—	
12	OVD	O	Vertical drive output
13	NC	—	
14	Vss	—	GND pin
15	LALTRI	I	Line alternate reset input
16	TEST	I	Test input
17	O2FH	O	$2f_H$ output (Double the frequency of Pin 27)
18	NC	—	
19	OSC	O	Sub carrier output
20	EXT	I	Internal and external synchronizing modes switchover L : Internal synchronization H : External synchronization
21	MODE1	I	System selecting input 1
22	MODE2	I	System selecting input 2
23	HRI	I	Horizontal reset input
24	HCOMOUT	O	Phase comparator output
25	CLOUT	O	Clock output
26	CLIN	I	Clock input
27	OFH	O	Horizontal frequency output
28	V_{DD}	—	Power supply pin

IC-4

Timing Chart

Output Timing Chart Diagram

CXD1217 NTSC, PALM

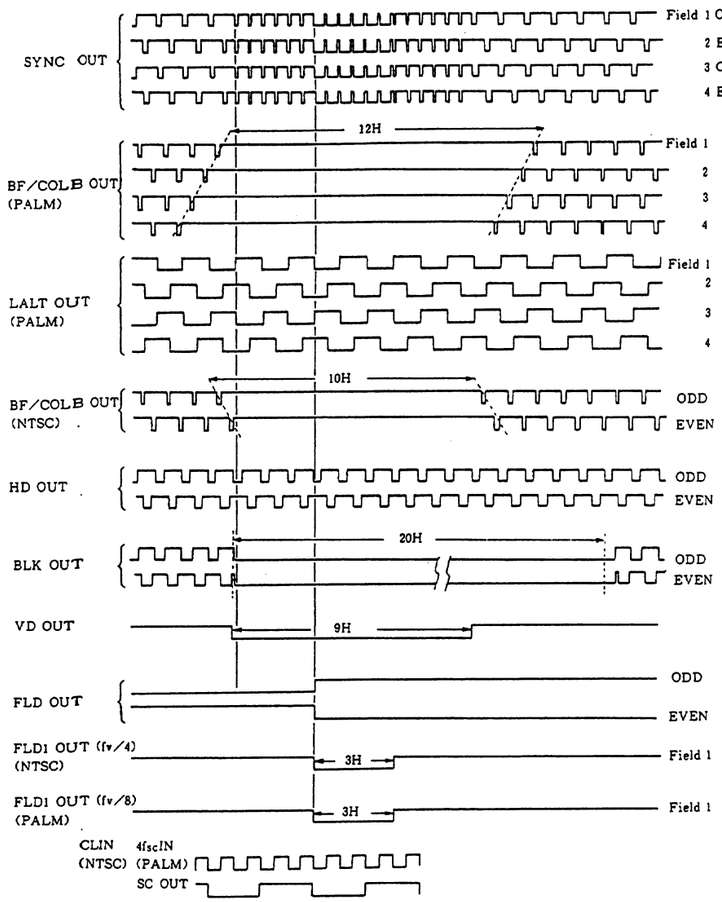

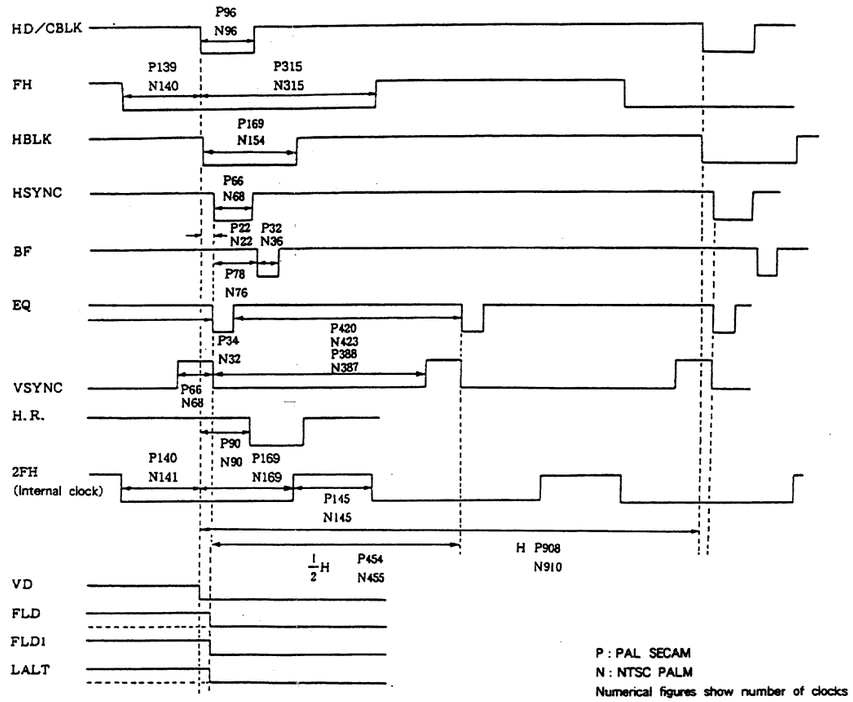

P : PAL SECAM
N : NTSC PALM
Numerical figures show number of clocks

■ DS90C032TM 【NATIONAL SEMICONDUCTOR】 (LVDS Quad CMOS Differential Line Receiver)

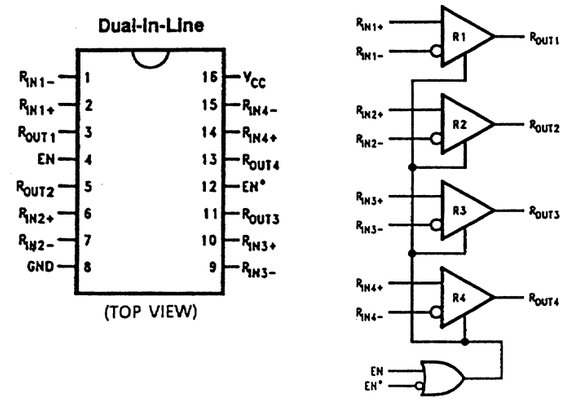

RECEIVER

ENABLES		INPUTS	OUTPUT
EN	EN*	$R_{IN+} - R_{IN-}$	R_{OUT}
L	H	X	Z
All other combinations of ENABLE inputs		$V_{ID} \geq 0.1V$	H
		$V_{ID} \leq -0.1V$	L
		Full Failsafe OPEN/SHORT or Terminated	H

IC-5

■ CXD2024AQ 【SONY】
(Digital Comb Filter (NTSC/PAL))

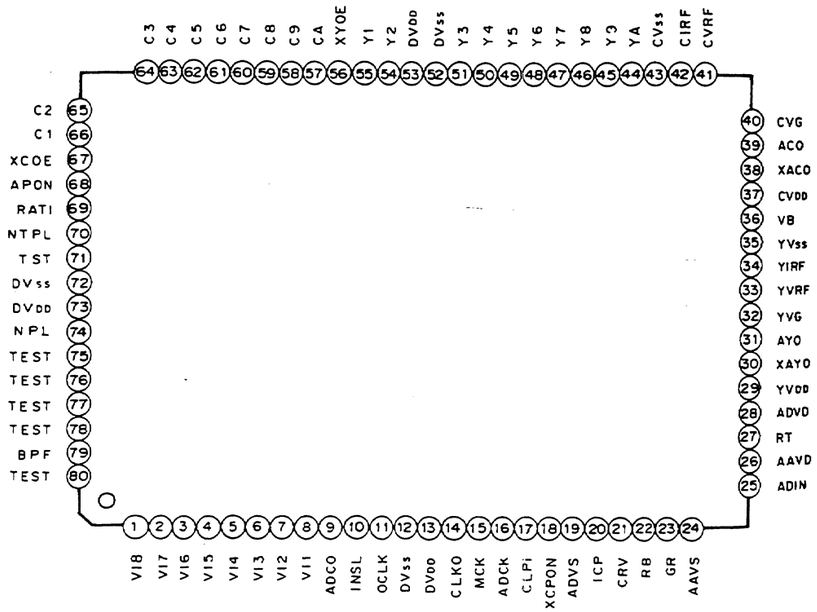

Pin No.	Symbol	I/O	Description
1	VI8	I	Digital input (MSB) When this pin is out of use, connect it with DVss or DVDD.
2	VI7	I	Digital input When this pin is out of use, connect it with DVss or DVDD.
3	VI6	I	Digital input When this pin is out of use, connect it with DVss or DVDD.
4	VI5	I	Digital input When this pin is out of use, connect it with DVss or DVDD.
5	VI4	I	Digital input When this pin is out of use, connect it with DVss or DVDD.
6	VI3	I	Digital input When this pin is out of use, connect it with DVss or DVDD.
7	VI2	I	Digital input When this pin is out of use, connect it with DVss or DVDD.
8	VI1	I	Digital input (LSB) When this pin is out of use, connect it with DVss or DVDD.
9	ADCO	I	H: Outputs video signal supplied from A-D converter (input pin: ADIN) as 8-bit digital data which is delayed by 3.5 clocks from Y OUT terminal. L: General operation mode
10	INSL	I	Input switching. Switches comb filter input. H: Digital input L: Analog input
11	OCLK	I	Clock amp. input. Input clock at a level of 0.8 Vp-p or higher after its DC component is cut off by capacitor.
12	DVss	—	Digital power ground
13	DVDD	—	Digital power supply (5 V)
14	CLKO	O	Clock amp. output
15	MCK	I	Clock input. Input 4 fsc clock locked with color burst to this pin. This pin is generally connected with the pin 14 (clock amp output).

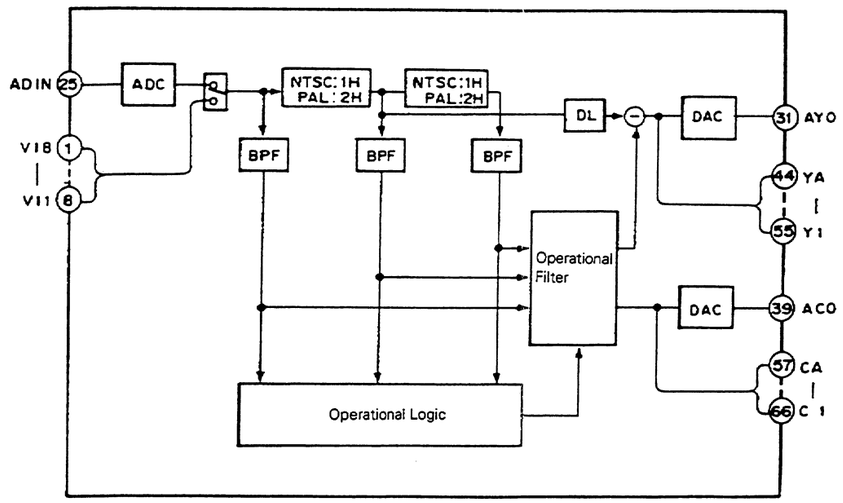

■ HM514260CTT-8 【HITACHI】
(VMOS D-RAM)

TSOP II

	HITACHI pin No.	JEDEC pin No.		
Vcc	1	1	44	40 Vss
I/O0	2	2	43	39 I/O15
I/O1	3	3	42	38 I/O14
I/O2	4	4	41	37 I/O13
I/O3	5	5	40	36 I/O12
Vcc	6	6	39	35 Vss
I/O4	7	7	38	34 I/O11
I/O5	8	8	37	33 I/O10
I/O6	9	9	36	32 I/O9
I/O7	10	10	35	31 I/O8
NC	11	13	32	30 NC
NC	12	14	31	29 $\overline{LCAS}$
$\overline{WE}$	13	15	30	28 $\overline{UCAS}$
$\overline{RAS}$	14	16	29	27 $\overline{OE}$
NC	15	17	28	26 A8
A0	16	18	27	25 A7
A1	17	19	26	24 A6
A2	18	20	25	23 A5
A3	19	21	24	22 A4
Vcc	20	22	23	21 Vss

(TOP VIEW)

■ EPM032VT-20-001 【JVC】
(CMOS EEPROM)

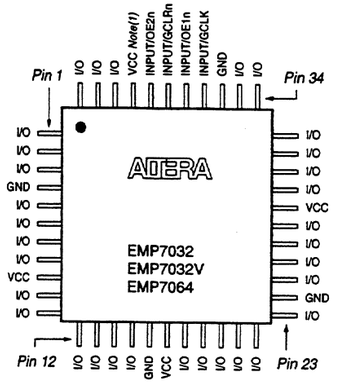

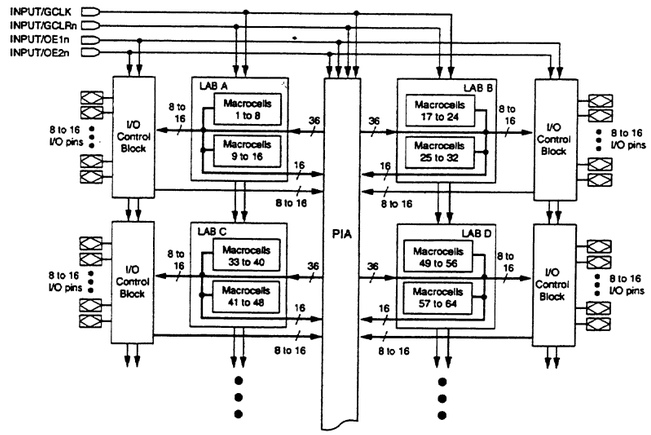

■ ICL232CBE 【INTERSIL】
(+5V Powered Dual RS-232 Transmitter/ Receiver)

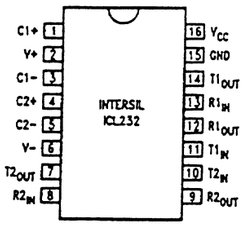

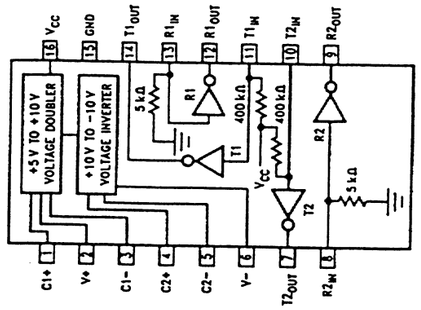

■ CXK48324Q 【SONY】
(2.4M Bit 3-port Field Memory)

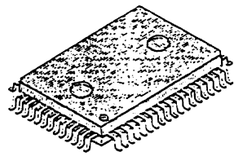

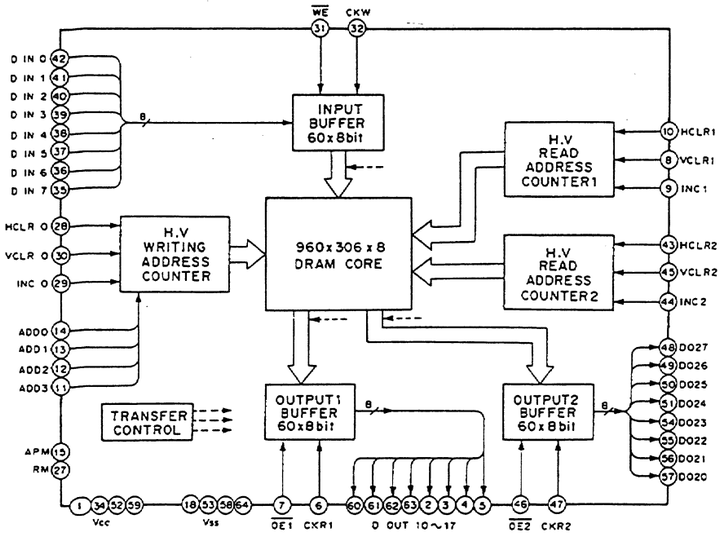

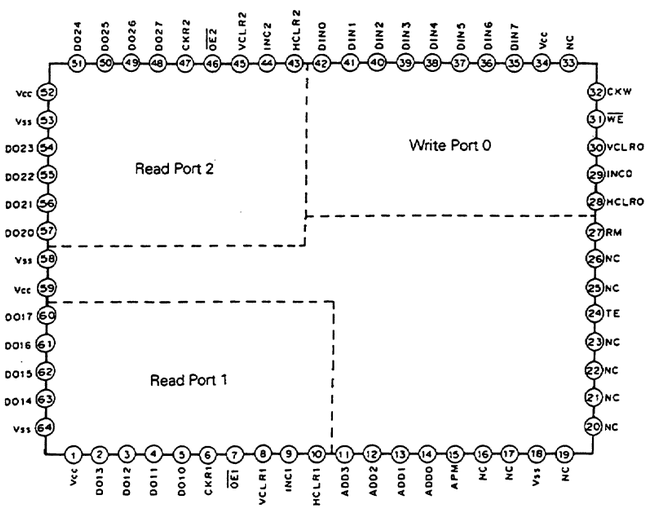

■ EL4583CS 【ELANTEC】
(Video Sync Separator)

FILTER CUT OFF	1	16	ANALOG GND
SET DETECT LEVEL	2	15	HORIZONTAL SYNC. OUTPUT
COMPOSITE SYNC. OUTPUT	3	14	VDD
FILTER INPUT	4	13	ODD/EVEN OUTPUT
VERTICAL SYNC. OUTPUT	5	12	RSET
GND	6	11	BACK PORCH CLAMP
FILTER OUTPUT	7	10	NO. SIGNAL DETECT. OUTPUT
VIDEO INPUT	8	9	LEVEL OUTPUT

Note: R SET must be a 1% resistor.

Top View

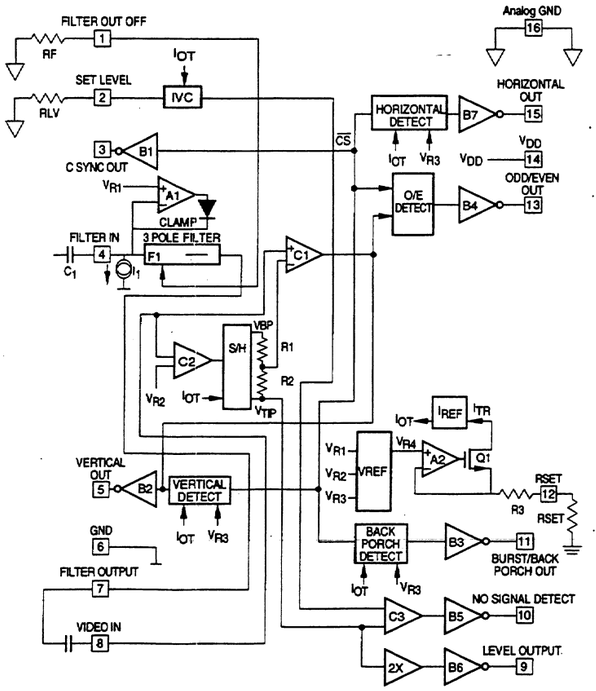

■ HD64180ZRFS8 【HITACHI】
(8-bit Micro-Processor)

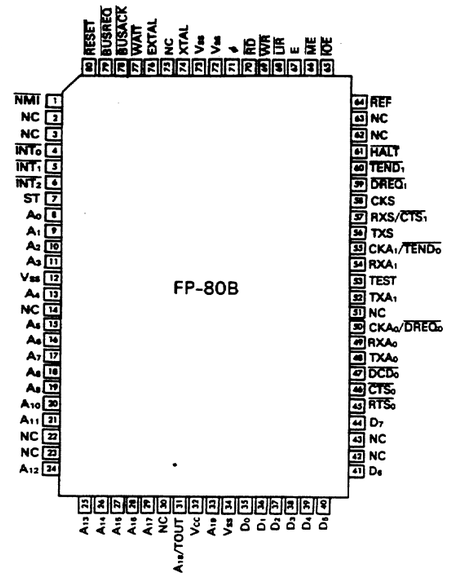

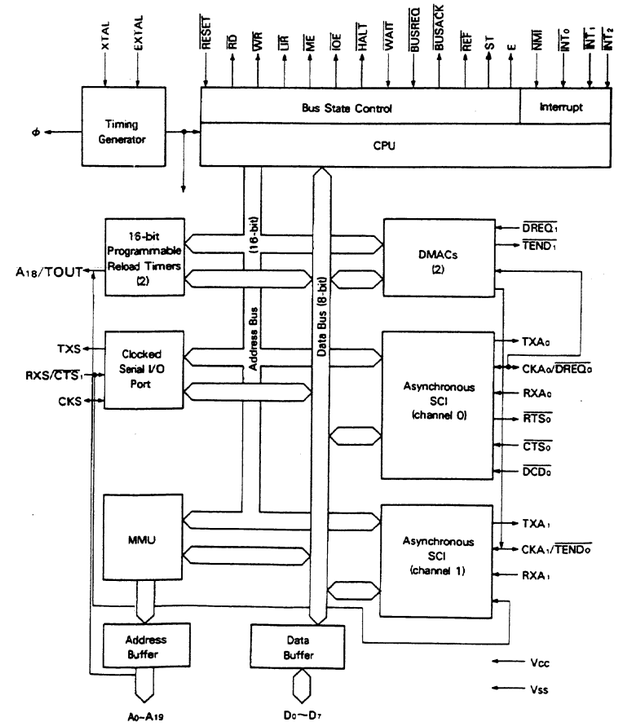

IC-7

■ JCL0024 【JVC】
(SSG)

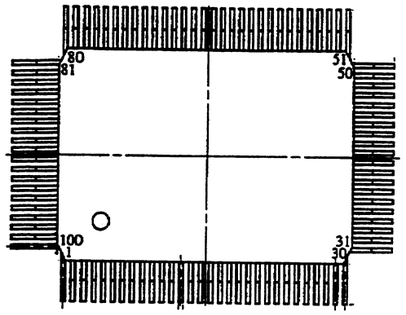

PIN NO.	Name	I/O	BLOCK TYPE	PIN NO.	Name	I/O	BLOCK TYPE
1	VDD	-	-	24	SYNC	O	FT01
2	HD	O	FT01	25	GND	-	-
3	GND	-	-	26	VSYNC	O	FT01
4	2FH	O	FT01	27	VDD	-	-
5	GND	-	-	28	FLD	O	FT01
6	BF	O	FT01	29	GND	-	-
7	VDD	-	-	30	GND	-	-
8	DBF	O	FT01	31	VDD	-	-
9	GND	-	-	32	VDD	-	-
10	DSYNC	O	FT01	33	LBOX	O	FT01
11	GND	-	-	34	GND	-	-
12	GND	-	-	35	EDFL	O	FT01
13	VDD	-	-	36	GND	-	-
14	VD	O	FT01	37	F	O	FT01
15	GND	-	-	38	GND	-	-
16	GND	-	-	39	GND	-	-
17	GND	-	-	40	GND	-	-
18	GND	-	-	41	VDD	-	-
19	GND	-	-	42	4FLP	O	FT01
20	VDD	-	-	43	GND	-	-
21	VDD	-	-	44	GND	-	-
22	GND	-	-	45	SETUP	O	FT01
23	GND	-	-	46	VDD	-	-

PIN NO.	Name	I/O	BLOCK TYPE	PIN NO.	Name	I/O	BLOCK TYPE
47	HSYNC	O	FT01	70	GND	-	-
48	GND	-	-	71	RSEL	I	FI02
49	13CKO	O	FT01	72	VDD	-	-
50	GND	-	-	73	TST6	I	FI02
51	VDD	-	-	74	TST5	I	FI02
52	27MCK	I	FI02	75	TST4	I	FI02
53	GND	-	-	76	TST3	I	FI02
54	STOP	I	FI02	77	TST2	I	FI02
55	GND	-	-	78	TST1	I	FI02
56	DSEL3	I	FI02	79	TSTC	I	FI02
57	DSEL2	I	FI02	80	GND	-	-
58	DSEL1	I	FI02	81	GND	-	-
59	VDD	-	-	82	VR	I	FI02
60	MPSEL	I	FI02	83	GND	-	-
61	CXSEL	I	FI02	84	REFE	O	FT01
62	GND	-	-	85	VDD	-	-
63	VDD	-	-	86	FV	O	FT01
64	GND	-	-	87	GND	-	-
65	MCK	I	FI02	88	GND	-	-
66	GND	-	-	89	FH	O	FT01
67	LALTRI	I	FI02	90	GND	-	-
68	VDD	-	-	91	VDD	-	-
69	RSTB	I	FI02	92	VDD	-	-

PIN NO.	Name	I/O	BLOCK TYPE	PIN NO.	Name	I/O	BLOCK TYPE
93	FF	O	FT01	97	VDD	-	-
94	GND	-	-	98	LALT	O	FT01
95	H	O	FT01	99	GND	-	-
96	VDD	-	-	100	GND	-	-

■ JCL0025 【JVC】
(Component Signal Multiplexer)

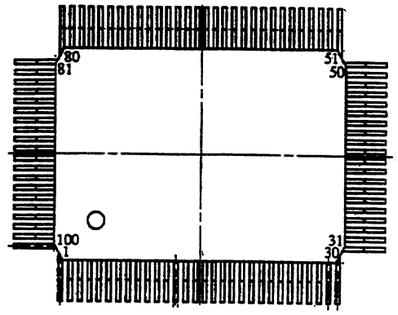

PIN NO.	Name	I/O	BLOCK TYPE	PIN NO.	Name	I/O	BLOCK TYPE
1	GND	-	-	24	Y4	B	BOOA
2	VDD	-	-	25	Y5	B	BOOA
3	DLYONB	I	FIU2	26	Y6	B	BOOA
4	BITSELA	I	FIU2	27	Y7	B	BOOA
5	BITSELB	I	FIU2	28	GND	-	-
6	GND	-	-	29	VDD	-	-
7	M0	B	BOOA	30	GND	-	-
8	M1	B	BOOA	31	R0	B	BOOA
9	M2	B	BOOA	32	R1	B	BOOA
10	M3	B	BOOA	33	R2	B	BOOA
11	GND	-	-	34	R3	B	BOOA
12	M4	B	BOOA	35	GND	-	-
13	M5	B	BOOA	36	R4	B	BOOA
14	M6	B	BOOA	37	R5	B	BOOA
15	M7	B	BOOA	38	R6	B	BOOA
16	GND	-	-	39	R7	B	BOOA
17	VDD	-	-	40	GND	-	-
18	GND	-	-	41	B0	B	BOOA
19	Y0	B	BOOA	42	B1	B	BOOA
20	Y1	B	BOOA	43	B2	B	BOOA
21	Y2	B	BOOA	44	B3	B	BOOA
22	Y3	B	BOOA	45	GND	-	-
23	GND	-	-	46	B4	B	BOOA

PIN NO.	Name	I/O	BLOCK TYPE	PIN NO.	Name	I/O	BLOCK TYPE
47	B5	B	BOOA	70	F2	I	FI02
48	B6	B	BOOA	71	F1	I	FI02
49	B7	B	BOOA	72	H2	I	FI02
50	VDD	-	-	73	H1	I	FI02
51	027M	O	FT01	74	VDD	-	-
52	VDD	-	-	75	GND	-	-
53	GND	-	-	76	27M2	I	FI02
54	HO	O	FT01	77	GND	-	-
55	FO	O	FT01	78	27M1	I	FI02
56	01813	O	FT01	79	VDD	-	-
57	6HO	O	FT01	80	GND	-	-
58	GND	-	-	81	IN27	I	FI02
59	VDD	-	-	82	IN26	I	FI02
60	GND	-	-	83	IN25	I	FI02
61	GND	-	-	84	IN24	I	FI02
62	RSTB	I	FIU2	85	IN23	I	FI02
63	HOMPX	I	FIU2	86	IN22	I	FI02
64	CSEL	I	FI02	87	IN21	I	FI02
65	RSEL2	I	FI02	88	IN20	I	FI02
66	RSEL	I	FI02	89	GND	-	-
67	GND	-	-	90	VDD	-	-
68	IN18M	I	FIU2	91	MPC7	I	FI02
69	18M	I	FIU2	92	MPC6	I	FI02

PIN NO.	Name	I/O	BLOCK TYPE	PIN NO.	Name	I/O	BLOCK TYPE
93	MPC5	I	FI02	97	MPC1	I	FI02
94	MPC4	I	FI02	98	MPC0	I	FI02
95	MPC3	I	FI02	99	GND	-	-
96	MPC2	I	FI02	100	MODE	I	FI02

IC-8

■ JCL0026 【JVC】
(Component Signal Multiplexer)

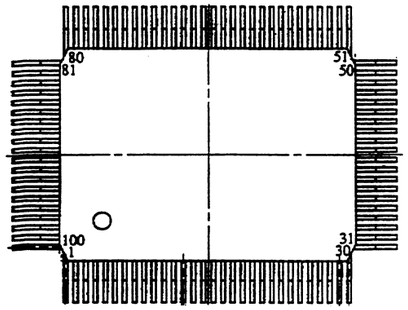

PIN NO.	Name	I/O	BLOCK TYPE	PIN NO.	Name	I/O	BLOCK TYPE
1	GND	-	-	24	Y4	I	FI02
2	VDD	-	-	25	Y5	I	FI02
3	TOUT1	0	FT01	26	Y6	I	FI02
4	TOUT2	0	FT01	27	Y7	I	FI02
5	N.C.	-	-	28	GND	-	-
6	GND	-	-	29	VDD	-	-
7	MPX0	0	FT01	30	GND	-	-
8	MPX1	0	FT01	31	B0	I	FI02
9	MPX2	0	FT01	32	R1	I	FI02
10	MPX3	0	FT01	33	B2	I	FI02
11	GND	-	-	34	R3	I	FI02
12	MPX4	0	FT01	35	GND	-	-
13	MPX5	0	FT01	36	B4	I	FI02
14	MPX6	0	FT01	37	R5	I	FI02
15	MPX7	0	FT01	38	B6	I	FI02
16	GND	-	-	39	R7	I	FI02
17	VDD	-	-	40	GND	-	-
18	GND	-	-	41	B0	I	FI02
19	Y0	I	FI02	42	B1	I	FI02
20	Y1	I	FI02	43	B2	I	FI02
21	Y2	I	FI02	44	B3	I	FI02
22	Y3	I	FI02	45	GND	-	-
23	GND	-	-	46	B4	I	FI02

PIN NO.	Name	I/O	BLOCK TYPE	PIN NO.	Name	I/O	BLOCK TYPE
47	B5	I	FI02	70	1M18M	I	FI02
48	B6	I	FI02	71	GND	-	-
49	B7	I	FI02	72	27M2	I	FI02
50	VDD	-	-	73	GND	-	-
51	027M	0	FT01	74	F1	I	FI02
52	VDD	-	-	75	H1	I	FI02
53	GND	-	-	76	18M	I	FI02
54	HO	0	FT01	77	GND	-	-
55	FO	0	FT01	78	27M1	I	FI02
56	0181S	0	FT01	79	VDD	-	-
57	13CKO	0	FT01	80	GND	-	-
58	GND	-	-	81	1M27	I	FI02
59	VDD	-	-	82	1M26	I	FI02
60	GND	-	-	83	1M25	I	FI02
61	GND	-	-	84	1M24	I	FI02
62	RSTB	I	FI02	85	1M23	I	FI02
63	MOMPX	I	FI02	86	1M22	I	FI02
64	CSEL	I	FI02	87	1M21	I	FI02
65	N.C.	-	-	88	1M20	I	FI02
66	SEL	I	FI02	89	GND	-	-
67	GND	-	-	90	VDD	-	-
68	F2	I	FI02	91	DSET	I	FI02
69	H2	I	FI02	92	BITSEL0	I	FI02

PIN NO.	Name	I/O	BLOCK TYPE	PIN NO.	Name	I/O	BLOCK TYPE
93	BITSEL1	I	FI02	97	TIN	I	FIU2
94	BITSEL2	I	FI02	98	TEB	I	FIU2
95	BITSEL3	I	FI02	99	GND	-	-
96	BITSEL4	I	FI02	100	N.C.	-	-

■ JCL0027 【JVC】
(Phase Comparator/Equalized Error Detecter)

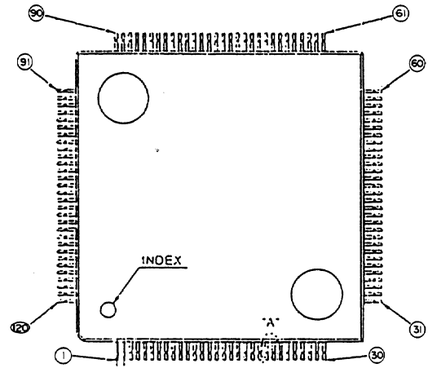

Pin No.	I/O	Pin Name	Input Level	Pull U/D	Buffer Name	Pin No.	I/O	Pin Name	Input Level	Pull U/D	Buffer Name
1	-	VSS				51	-	VSS			
2	I	CK1	CMOS		ITCKM	52	O	TEST02	CMOS		OTCM
3	O	OVSS1			OVSS	53	O	OVSS6			OVSS
4	I	CK21	CMOS		ITCKM	54	I	DO2	CMOS		ITCH
5	O	OVSS2			OVSS	55	I	HEADSW2	CMOS		ITCH
6	I	CKD1	CMOS		ITCKM	56	I	RST2	CMOS		ITCH
7	O	OVSS3			OVSS	57	I	TEST32	CMOS		ITCH
8	O	OVSS4			OVSS	58	I	TEST12	CMOS		ITCH
9	O	CTO1	CMOS		OTSTM	59	O	OVSS8			OVSS
10	O	CTON1	CMOS		OTSTM	60	-	VDD(3V)			
11	-	VSS				61	-	VSS			
12	O	CTP11	CMOS		OTSTM	62	I	CK2	CMOS		ITCKM
13	O	CTP1N1	CMOS		OTSTM	63	O	OVSS7			OVSS
14	O	CTM11	CMOS		OTSTM	64	I	CK22	CMOS		ITCKM
15	O	CTM1N1	CMOS		OTSTM	65	O	OVSS8			OVSS
16	-	VDD(3V)				66	I	CKD2	CMOS		ITCKM
17	O	CTP21	CMOS		OTSTM	67	O	OVSS9			OVSS
18	O	CTP2N1	CMOS		OTSTM	68	O	OVSS10			OVSS
19	O	CTM21	CMOS		OTSTM	69	O	CTO2	CMOS		OTSTM
20	O	CTM2N1	CMOS		OTSTM	70	O	CTON2	CMOS		OTSTM
21	-	VSS				71	-	VSS			
22	O	DATAOUT1	CMOS		OTCH	72	O	CTP12	CMOS		OTSTM
23	O	CKOUT1	CMOS		OTCH	73	O	CTP1N2	CMOS		OTSTM
24	O	UNL11	CMOS		OTCM	74	O	CTM12	CMOS		OTSTM
25	O	UNL21	CMOS		OTCM	75	O	CTM1N2	CMOS		OTSTM
26	O	LOUL1	CMOS		OTCM	76	-	VDD(3V)			
27	O	FS1	CMOS		OTSTM	77	O	CTP22	CMOS		OTSTM
28	O	DS1	CMOS		OTSTM	78	O	CTP2N2	CMOS		OTSTM
29	I	DS11	CMOS		ITCH	79	O	CTM22	CMOS		OTSTM
30	I	DS21	CMOS		ITCH	80	O	CTM2N2	CMOS		OTSTM
31	-	VSS				81	-	VSS			
32	-	N.C.				82	O	DATAOUT2	CMOS		OTCH
33	I	DAINPP2			IDHM	83	O	CKOUT2	CMOS		OTCH
34	I	DAINPM2				84	O	UNL12	CMOS		OTCM
35	I	DAINMP2			IDLM	85	O	UNL22	CMOS		OTCM
36	I	DAINMM2				86	O	LOUL2	CMOS		OTCM
37	I	ERINP1P2			IDHM	87	O	FS2	CMOS		OTSTM
38	I	ERINP1M2				88	O	DS2	CMOS		OTSTM
39	I	ERINOP2			IDWM	89	I	DS12	CMOS		ITCH
40	I	ERINOM2				90	I	DS22	CMOS		ITCH
41	-	VSS				91	-	VSS			
42	I	ERINM1P2			IDLM	92	-	N.C.			
43	I	ERINM1M2				93	I	DAINPP1			IDHM
44	-	N.C.				94	I	DAINPM1			
45	-	N.C.				95	I	DAINMP1			IDLM
46	-	VDD(3V)				96	I	DAINMM1			
47	O	CHGP2	CMOS		OTSTM	97	I	ERINP1P1			IDHM
48	O	DCHGP2	CMOS		OTSTM	98	I	ERINP1M1			
49	O	CHGM2	CMOS		OTSTM	99	I	ERINOP1			IDWM
50	O	DCHGM2	CMOS		OTSTM	100	I	ERINOM1			

Pin No.	I/O	Pin Name	Input Level	Pull U/D	Buffer Name	Pin No.	I/O	Pin Name	Input Level	Pull U/D	Buffer Name
101	-	VSS				111	-	VSS			
102	I	ERINM1P1			IDLM	112	O	TEST01	CMOS		OTCM
103	I	ERINM1M1				113	O	OVSS11			OVSS
104	-	N.C.				114	I	DO1	CMOS		ITCH
105	I	VPDIN		VPD		115	I	HEADSW1	CMOS		ITCH
106	-	VDD(3V)				116	I	RST1	CMOS		ITCH
107	O	CHGP1	CMOS		OTSTM	117	I	TEST31	CMOS		ITCH
108	O	DCHGP1	CMOS		OTSTM	118	I	TEST11	CMOS		ITCH
109	O	CHGM1	CMOS		OTSTM	119	O	OVSS12			OVSS
110	O	DCHGM1	CMOS		OTSTM	120	-	VDD(3V)			

IC-9

■ JCL0028 【JVC】
(Shuffling Memory Control)

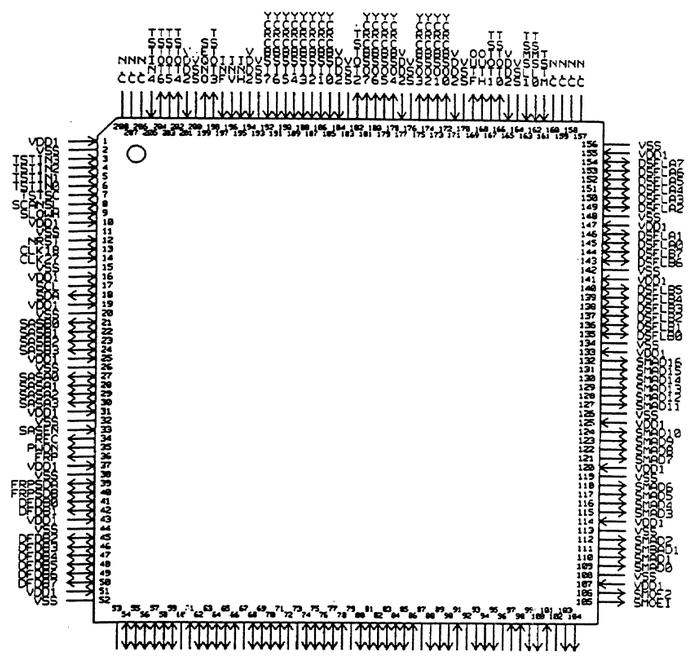

■ JCL0029 【JVC】
(DCI-R Circcuit)

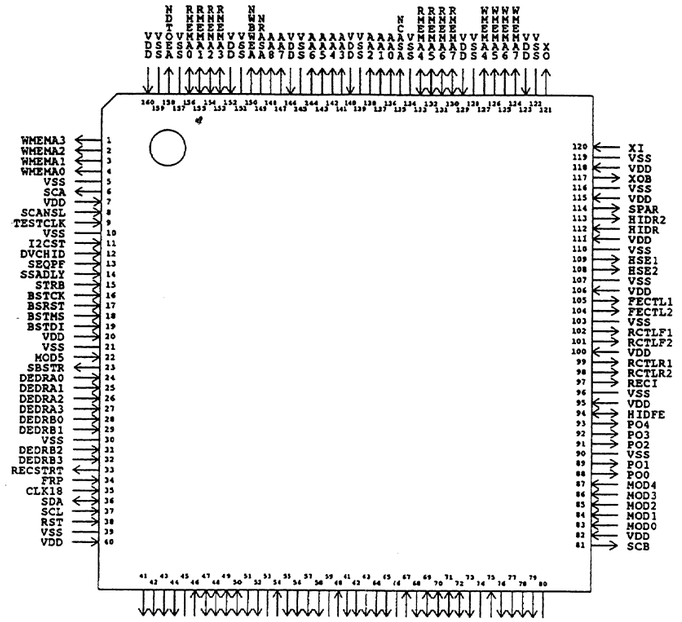

■ JCL0030 【JVC】
(DCI-P Circcuit)

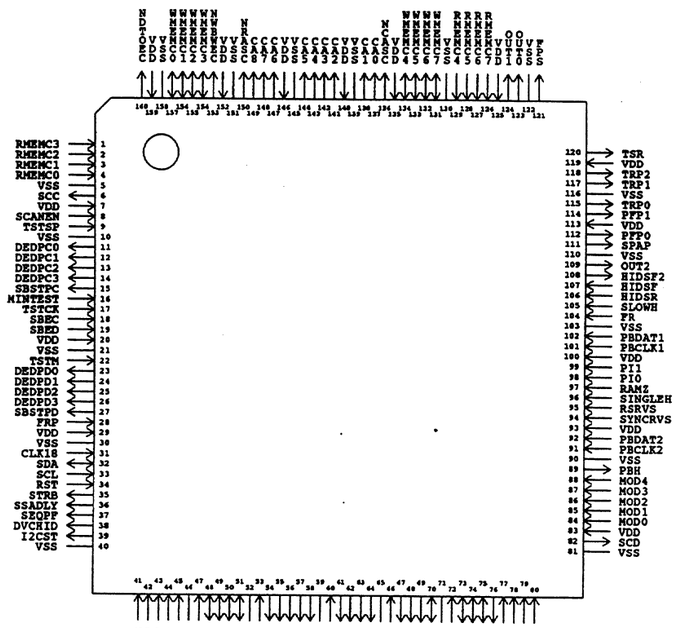

■ JCL0034 【JVC】
(Memory Control)

PIN NO.	Name	I/O	BLOCK TYPE	PIN NO.	Name	I/O	BLOCK TYPE
1	GND	-	-	24	RFID	I	FI02
2	GND	-	-	25	RCLK	I	FI02
3	CDEBS	0	FT01	26	GND	-	-
4	CDEBF	0	FT01	27	VDD	-	-
5	CVCR1	0	FT01	28	VOC	I	FI02
6	CIRC1	0	FT01	29	VITCP	I	FI02
7	CECR1	0	FT01	30	VITCGEN	I	FI02
8	VDD	-	-	31	GND	-	-
9	CMD17	I	FI02	32	VITCH	0	FT01
10	CMD16	I	FI02	33	VITCV	0	FT01
11	CMD15	I	FI02	34	GND	-	-
12	CMD14	I	FI02	35	VBD	-	-
13	CMD13	I	FI02	36	VBD	-	-
14	CMD12	I	FI02	37	CHEBS	0	FT01
15	CMD11	I	FI02	38	CHEBF	0	FT01
16	CMD10	I	FI02	39	CVCR0	0	FT01
17	GND	-	-	40	CIRC0	0	FT01
18	GND	-	-	41	CECR0	0	FT01
19	R27N	I	FI02	42	VDD	-	-
20	N.C.	-	-	43	CMD07	0	FT01
21	N.C.	-	-	44	CMD06	0	FT01
22	RHD	I	FI02	45	CMD05	0	FT01
23	RVD	I	FI02	46	CMD04	0	FT01

PIN NO.	Name	I/O	BLOCK TYPE	PIN NO.	Name	I/O	BLOCK TYPE
47	CMD03	0	FT01	70	FRZE	I	FI02
48	CMD02	0	FT01	71	FSME	I	FI02
49	CMD01	0	FT01	72	MODEEN	I	FI02
50	CMD00	0	FT01	73	MODELB	I	FI02
51	GND	-	-	74	MODECK	I	FI02
52	GND	-	-	75	MODEB	I	FI02
53	VDD	-	-	76	TSCEN	0	FT01
54	FRST	I	FIU2	77	CMPL	I	FI02
55	GND	-	-	78	VDD	-	-
56	N.C.	-	-	79	GND	-	-
57	N.C.	-	-	80	TBCL	I	FI02
58	HPREF	I	FIU2	81	SWL	I	FIU2
59	GND	-	-	82	DIGF	I	FI02
60	ETEST	I	FIB2	83	DIGH	I	FI02
61	LTEST	I	FIU2	84	GND	-	-
62	VDD	-	-	85	HCLK	I	FI02
63	VDD	-	-	86	VDD	-	-
64	VDD	-	-	87	ADC10	I	FI02
65	GND	-	-	88	ADC11	I	FI02
66	GND	-	-	89	ADC12	I	FI02
67	GND	-	-	90	ADC13	I	FI02
68	FRZEEN	0	FT01	91	ADC14	I	FI02
69	HTSCL	I	FI02	92	ADC15	I	FI02

PIN NO.	Name	I/O	BLOCK TYPE	PIN NO.	Name	I/O	BLOCK TYPE
93	ADC16	I	FI02	116	YHCRO	0	FT01
94	ADC17	I	FI02	117	YIHCO	0	FT01
95	GND	-	-	118	YVCRO	0	FT01
96	ADY10	I	FI02	119	YHESF	0	FT01
97	ADY11	I	FI02	120	YHESS	0	FT01
98	ADY12	I	FI02	121	GND	-	-
99	ADY13	I	FI02	122	GND	-	-
100	ADY14	I	FI02	123	GND	-	-
101	ADY15	I	FI02	124	GND	-	-
102	ADY16	I	FI02	125	GND	-	-
103	ADY17	I	FI02	126	VDD	-	-
104	VDD	-	-	127	VDD	-	-
105	GND	-	-	128	VDD	-	-
106	GND	-	-	129	VDD	-	-
107	YHD00	0	FT01	130	VDD	-	-
108	YHD01	0	FT01	131	GND	-	-
109	YHD02	0	FT01	132	GND	-	-
110	YHD03	0	FT01	133	GND	-	-
111	YHD04	0	FT01	134	GND	-	-
112	YHD05	0	FT01	135	GND	-	-
113	YHD06	0	FT01	136	VDD	-	-
114	YHD07	0	FT01	137	VDD	-	-
115	VDD	-	-	138	VDD	-	-

PIN NO.	Name	I/O	BLOCK TYPE	PIN NO.	Name	I/O	BLOCK TYPE
139	VDD	-	-	162	CPHY3	0	FT01
140	VDD	-	-	163	CPHY2	0	FT01
141	YHD10	I	FI02	164	CPHY1	0	FT01
142	YHD11	I	FI02	165	CPHY0	0	FT01
143	YHD12	I	FI02	166	GND	-	-
144	YHD13	I	FI02	167	CHLK	0	FT01
145	YHD14	I	FI02	168	VDD	-	-
146	YHD15	I	FI02	169	VDD	-	-
147	YHD16	I	FI02	170	VDD	-	-
148	YHD17	I	FI02	171	VDD	-	-
149	VDD	-	-	172	GND	-	-
150	YHCR1	0	FT01	173	CPHC7	0	FT01
151	YIHC1	0	FT01	174	CPHC6	0	FT01
152	YVCR1	0	FT01	175	CPHC5	0	FT01
153	YOESF	0	FT01	176	CPHC4	0	FT01
154	YOESS	0	FT01	177	CPHC3	0	FT01
155	GND	-	-	178	CPHC2	0	FT01
156	GND	-	-	179	CPHC1	0	FT01
157	VDD	-	-	180	CPHC0	0	FT01
158	CPHY7	0	FT01	181	CPHBR	0	FT01
159	CPHY6	0	FT01	182	GND	-	-
160	CPHY5	0	FT01	183	VDD	-	-
161	CPHY4	0	FT01	184	CPSC7	0	FT01

PIN NO.	Name	I/O	BLOCK TYPE	PIN NO.	Name	I/O	BLOCK TYPE
185	CPSC6	0	FT01	197	VDD	-	-
186	CPSC5	0	FT01	198	HPREF	I	FIB2
187	CPSC4	0	FT01	199	GND	-	-
188	CPSC3	0	FT01	200	HPD7	0	FT01
189	CPSC2	0	FT01	201	HPD6	0	FT04
190	CPSC1	0	FT01	202	HPD5	0	FT01
191	CPSC0	0	FT01	203	HPD4	0	FT01
192	CPSH0	0	FT01	204	HPD3	0	FT01
193	GND	-	-	205	HPD2	0	FT01
194	GND	-	-	206	HPD1	0	FT01
195	GND	-	-	207	HPD0	0	FT01
196	GND	-	-	208	VDD	-	-

■ L7A1433 【LSI LOGIC】
(ECC)

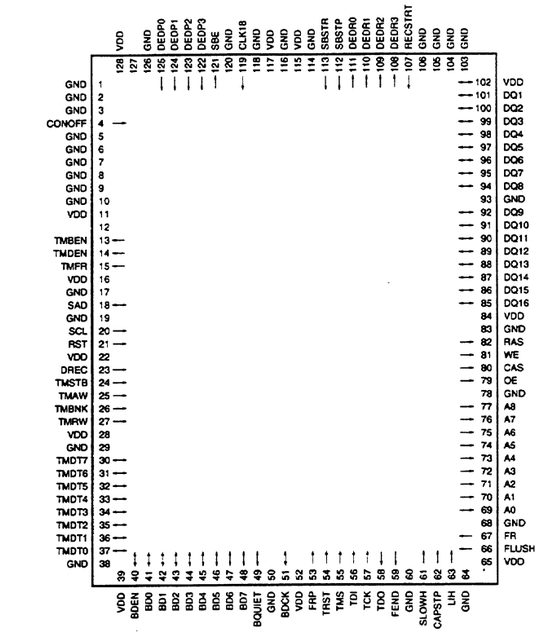

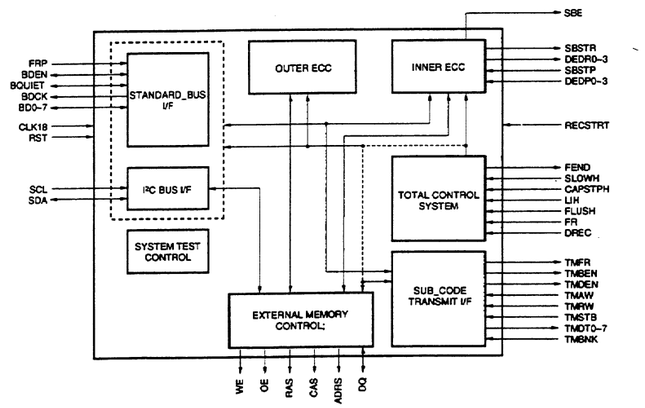

■ LM318M 【NATIONAL SEMICONDUCTOR】
(Operational Amplifiers)

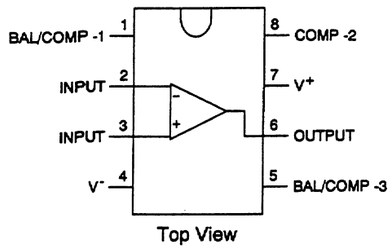

■ LM360M 【NATIONAL SEMICONDUCTOR】
(High Speed Differential Comparator)

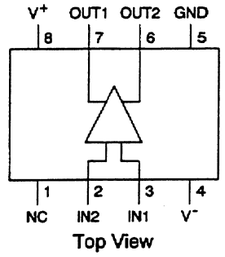

■ LM6361M 【NATIONAL SEMICONDUCTOR】
(High Speed Op. Amplifier)

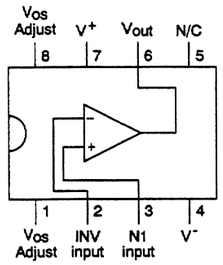

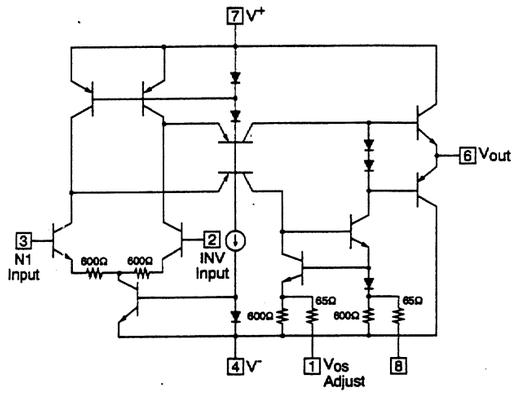

■ LM79L12ACM 【NATIONAL SEMICONDUCTOR】
(Refer to LM79L05ACM.)

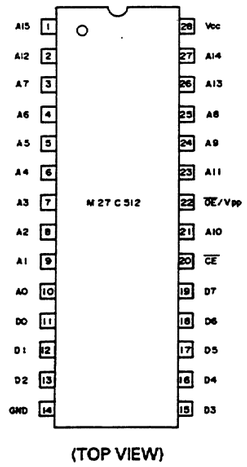

■ LM79L05ACM 【NATIONAL SEMICONDUCTOR】
(3-Terminal Negative Regulators)

■ M27C512-15F1 【MITSUBISHI】
(524288 Bit Programmed EPROM)

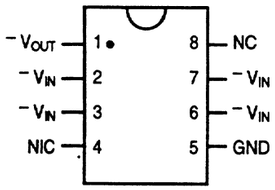

■ M50255P 【MITSUBISHI】
(16 Bit Serial/Parallel Converter)

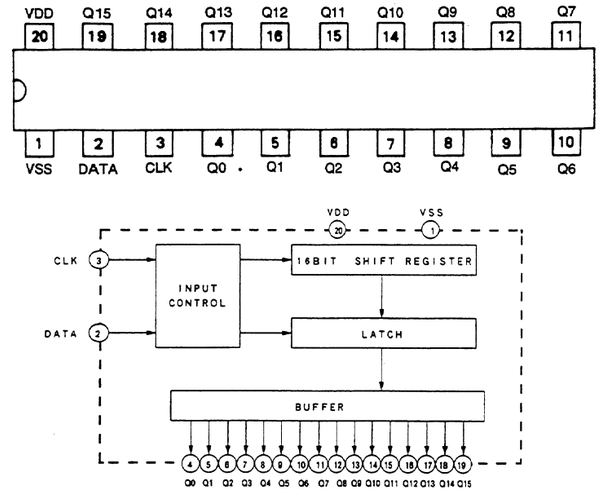

■ M51957BFP 【MITSUBISHI】
(Voltage Detector/System Reset)

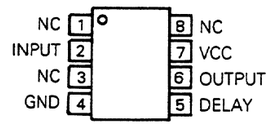

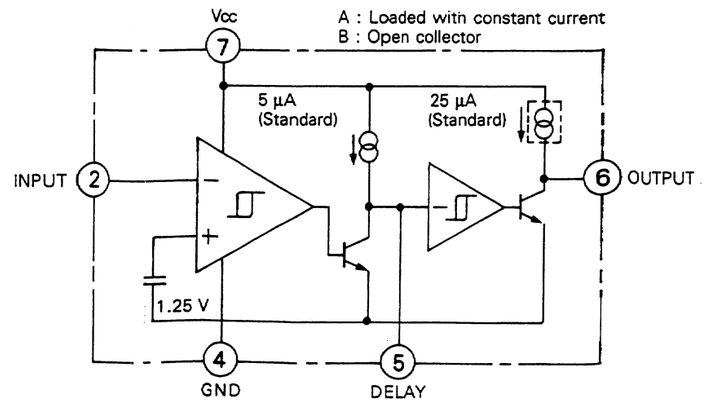

IC-11

■ M5201FP 【MITSUBISHI】
(Switch Op Amp.)

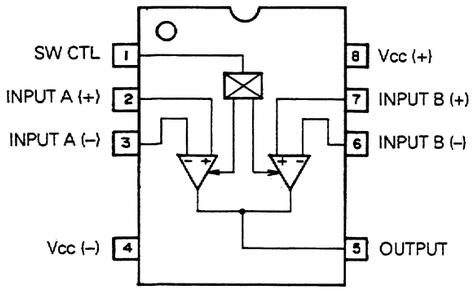

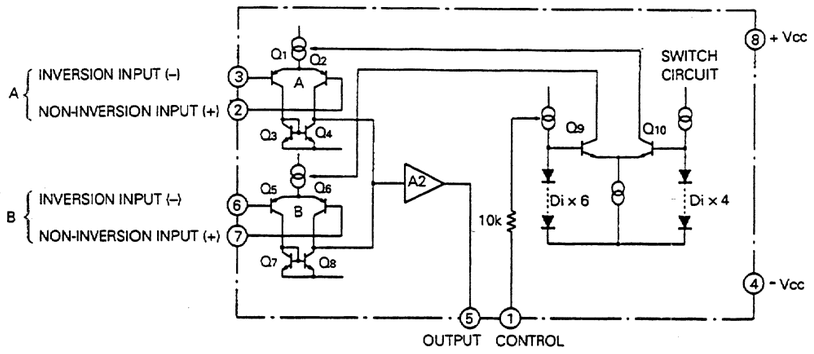

■ M5201L 【MITSUBISHI】
(Switch Op Amp.)

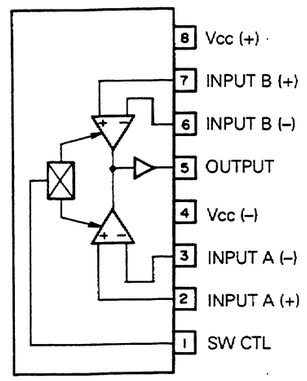

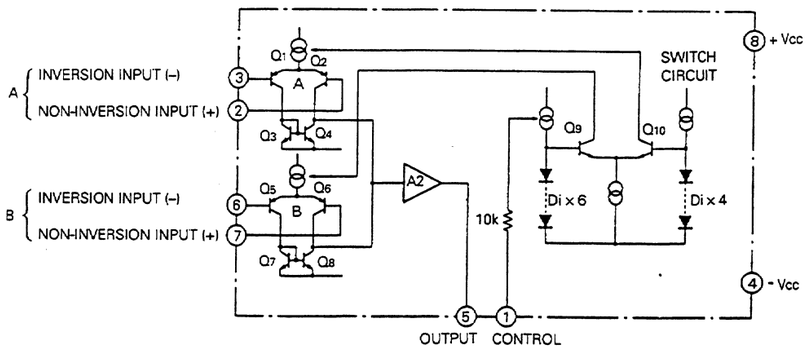

■ M5218AFP 【MITSUBISHI】
(Dual Op.Amp)

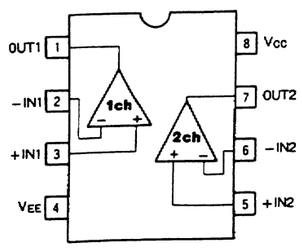

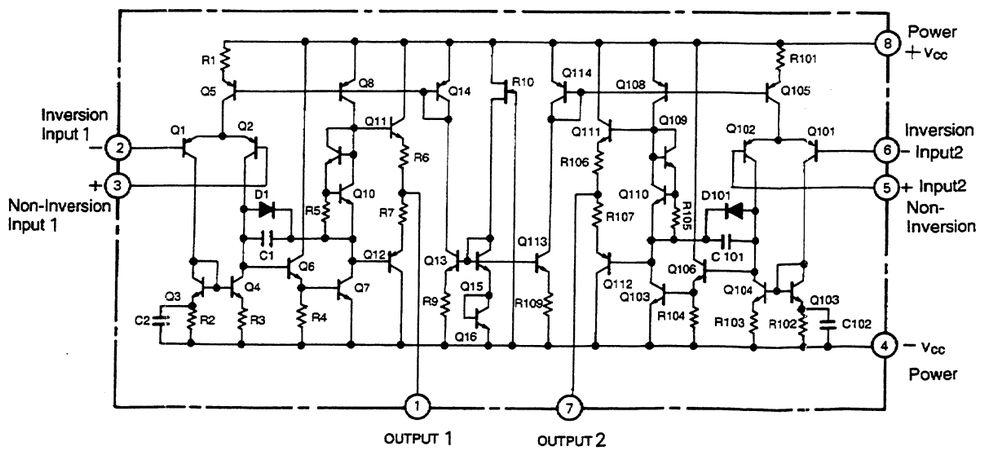

■ M5220P 【MITSUBISHI】
(Dual Op.Amp)

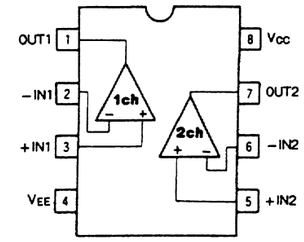

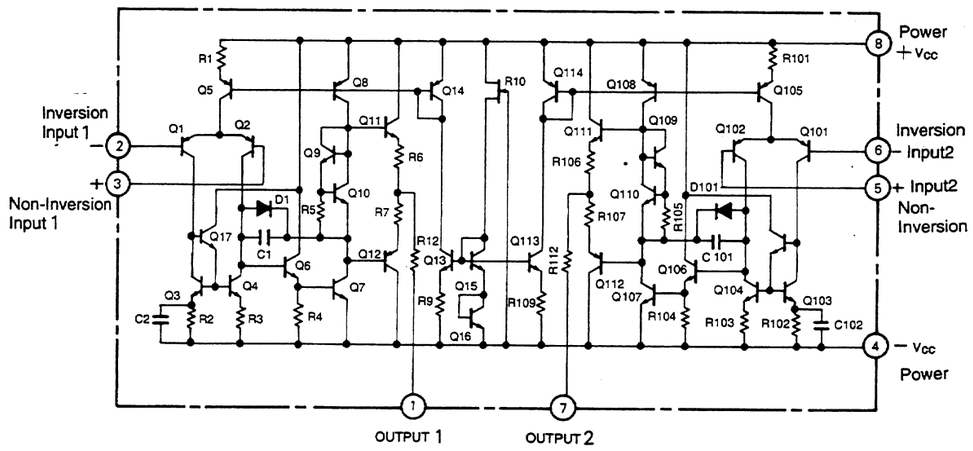

■ M51271FP 【MITSUBISHI】
(Component Decoder)

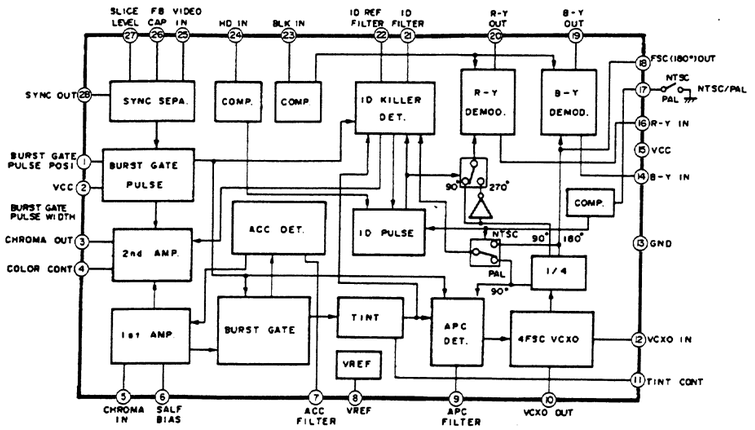

■ M5218AP 【MITSUBISHI】
(Refer to M5218AFP.)

■ M52660FP 【MITSUBISHI】
(3ch VCO)

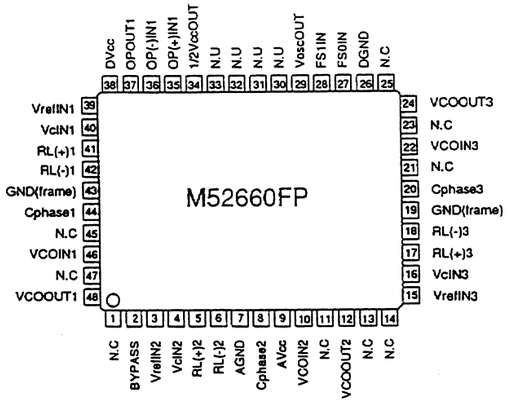

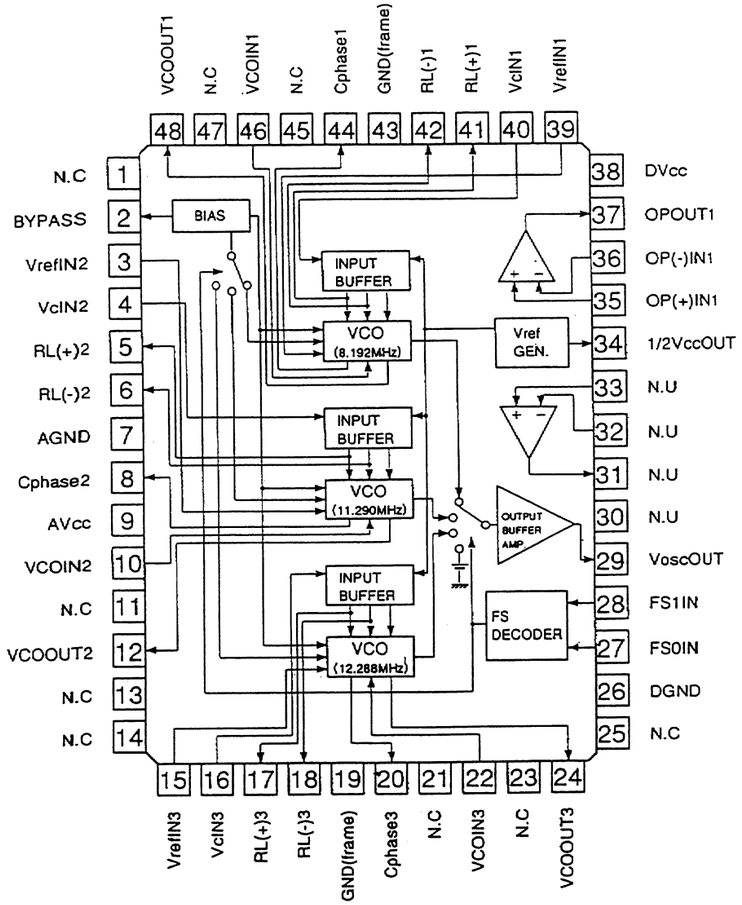

■ M5278L12 【MITSUBISHI】
(3 Terminal Positive Voltage Regulator (+12V))

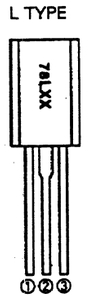

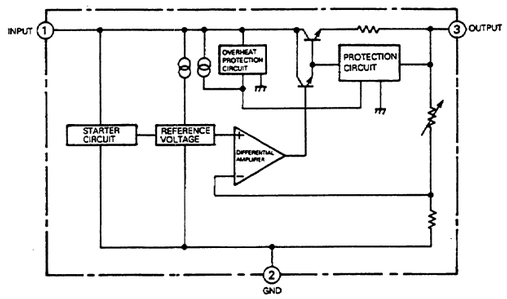

■ M62352FP 【MITSUBISHI】
(8 Bit 12CH D/A Converter)

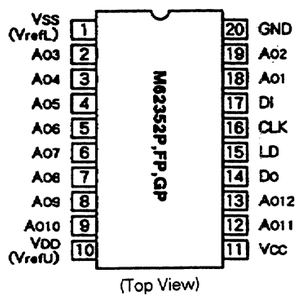

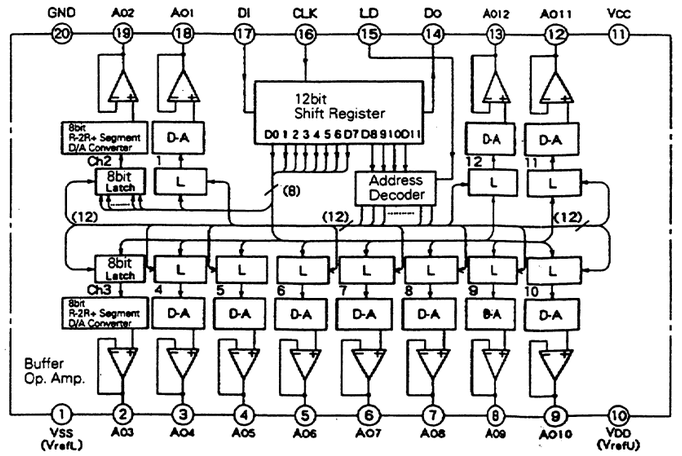

■ M5283P 【MITSUBISHI】

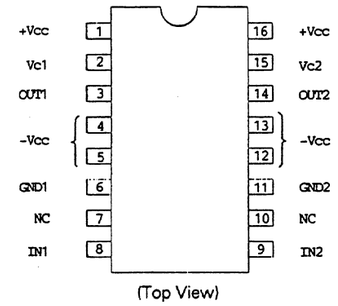

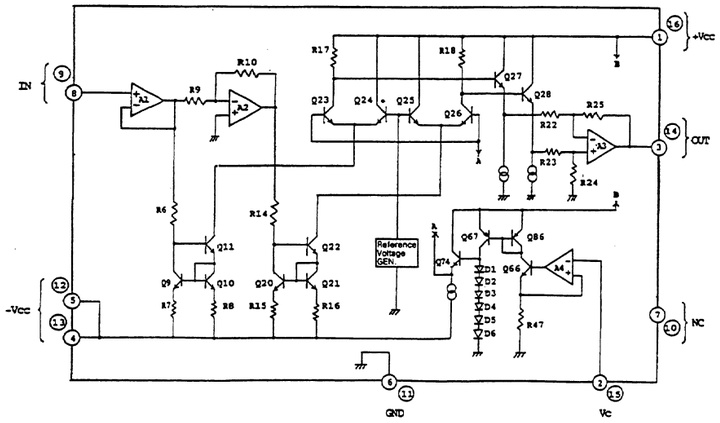

IC-13

■ M62353GP 【MITSUBISHI】
(8-Bit 8-Channel D/A Converter)

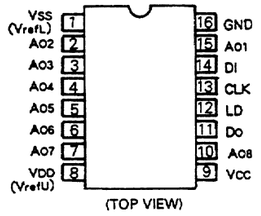

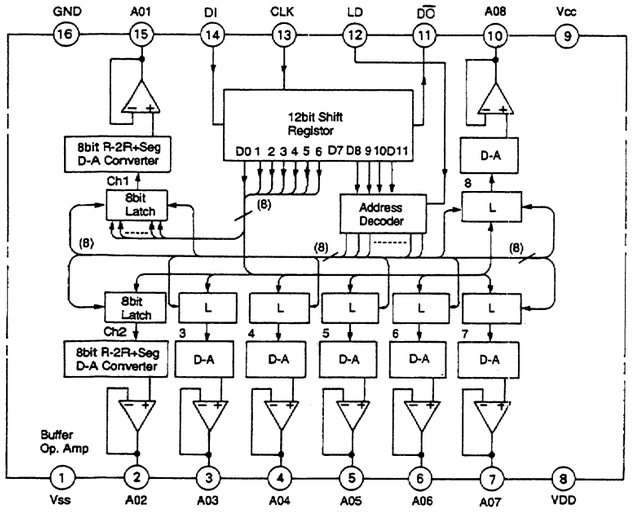

■ M62354FP 【MITSUBISHI】
(8-Bit 6-Channel D/A Converter)

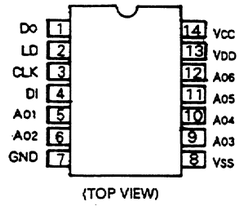

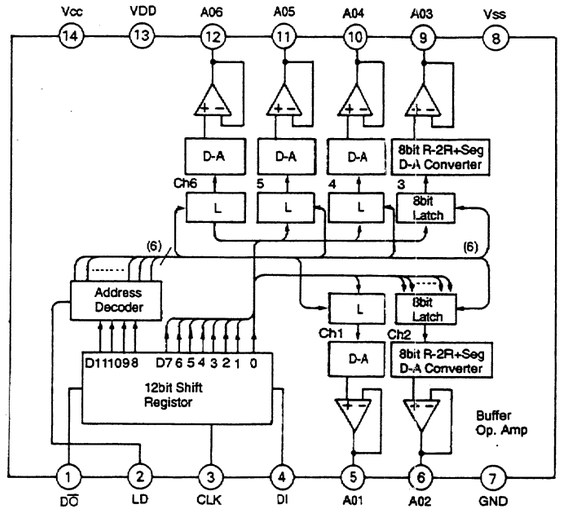

■ M66311FP 【MITSUBISHI】
(LED Driver)

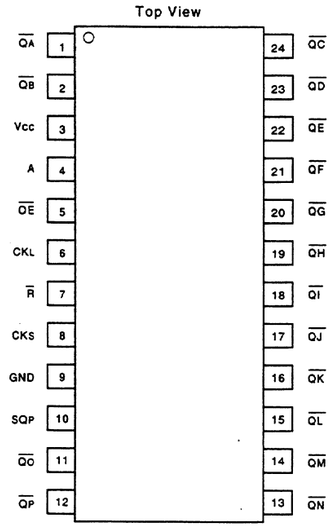

■ MC14577CF 【MOTOROLA】
(Dual Op.Amp)

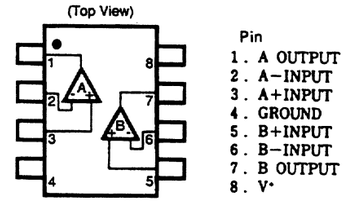

■ MC33269DR2-3.3 【MOTOROLA】
(Regulator)

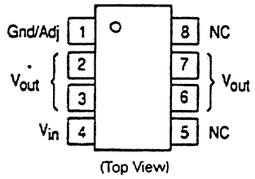

■ MC10H107M 【MOTOROLA】
(Triple 2-Input Exclusive "OR"/ Exclusive "NOR")

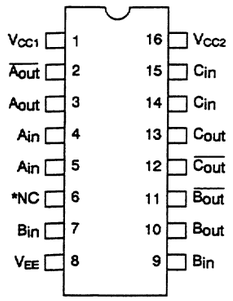

■ MC10H116M 【MOTOROLA】
(Triple Line Receiver)

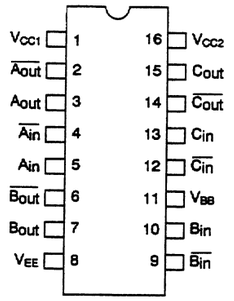

■ MC10H124M 【MOTOROLA】
(Quad TTL-TO-MECL Translator)

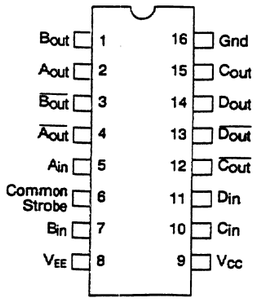

■ MC10H125M 【MOTOROLA】
(Quad MECL-TO-TTL Translator)

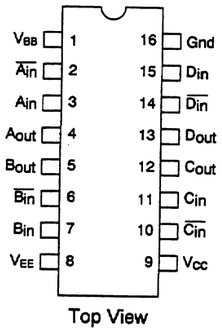

■ M65401FP 【MITSUBISHI】
(AUDIO-P2)

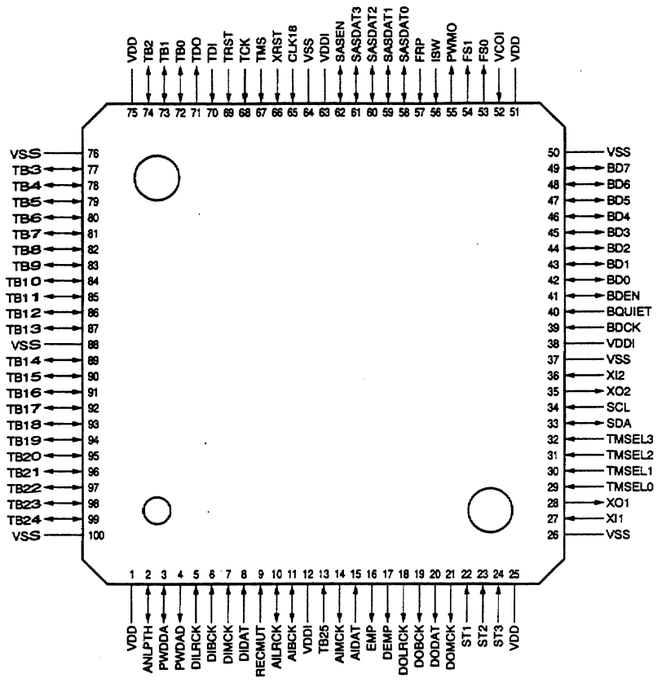

Pin Number	Pin Name	Function	I/O
1	VDD	Outer Power	–
2	ANLPTH	Analog loop through(H:through)	B
3	PWDDA	Power down for DAC(L:power down)	B
4	PWDAD	Power down for ADC(L:power down)	O
5	DILRCK	L/R clock from Digital In	I
6	DIBCK	Bit clock from Digital In	I
7	DIMCK	Master clock from Digital In	I
8	DIDAT	Serial Data from Digital In	I
9	RECMUT	Rec Data Mute	I
10	AILRCK	L/R clock for ADC	B
11	AIBCK	Bit clock for ADC	B
12	VDDI	Inner Power	–
13	TB[25]	Test Bus	I
14	AIMCK	Master clk for ADC(256 • fs)	O
15	AIDAT	Serial Data from ADC	I
16	EMP	ADC emphasis control	O
17	DEMP	DAC De-emphasis control	O
18	DOLRCK	L/R clock for DAC/D-OUT	O
19	DOBCK	Bit clock for DAC/D-OUT	O
20	DODAT	Serial Data for DAC/D-OUT	O
21	DOMCK	Master clock for DAC/D-OUT(256 • fs)	O
22	ST1	Scan Test Mode Select(L:enable)	I
23	ST2	Scan Test Clock	I
24	ST3	Scan Test Data Input	I
25	VDD	Outer Power	–
26	VSS	GND	–
27	XI1	12.288MHz X'tal port(48kHz)	I
28	XO1	12.288MHz X'tal port(48kHz)	O
29	TMSEL[0]	Test Mode Select	I
30	TMSEL[1]	Test Mode Select	I
31	TMSEL[2]	Test Mode Select	I
32	TMSEL[3]	Test Mode Select	I
33	SDA	I2C data line	B
34	SCL	I2C clock line	I
35	XO2	8.192MHz X'tal port(32kHz)	O
36	XI2	8.192MHz X'tal port(32kHz)	I
37	VSS	GND	–
38	VDDI	Inner Power	–
39	BDCK	DVC bus clock	I
40	BQUIET	DVC bus control	I
41	BDEN	DVC bus enable	B
42	BD[0]	DVC bus data	B
43	BD[1]	DVC bus data	B
44	BD[2]	DVC bus data	B
45	BD[3]	DVC bus data	B
46	BD[4]	DVC bus data	B
47	BD[5]	DVC bus data	B
48	BD[6]	DVC bus data	B
49	BD[7]	DVC bus data	B
50	VSS	GND	–

Pin Number	Pin Name	Function	I/O
51	VDD	Outer Power	–
52	VCOI	VCO clock input for PLL	I
53	FS[0]	Fs select for VCO	O
54	FS[1]	Fs select for VCO	O
55	PWMO	Phase comparator output of PLL	O
56	ISW	1mA or 4mA Change Control ("H":4mA,"L":1mA)	I
57	FRP	Frame Start from Shuffling	I
58	SASDAT[0]	Line Data to/from Shuffling	B
59	SASDAT[1]	Line Data to/from Shuffling	B
60	SASDAT[2]	Line Data to/from Shuffling	B
61	SASDAT[3]	Line Data to/from Shuffling	B
62	SASEN	Line Data Enable to Shuffling	B
63	VDDI	Inner Power	–
64	VSS	GND	–
65	CLK18	Master clock (18MHz)	I
66	XRST	Reset (L:reset)	I
67	TMS	Boundary Scan Test (Test Mode Select)	I
68	TCK	Boundary Scan Test (Test Clock)	I
69	TRST	Boundary Scan Test (Test Reset)	I
70	TDI	Boundary Scan Test (Test Data Input)	I
71	TDO	Boundary Scan Test (Test Data Output)	O
72	TB[0]	Test Bus	B
73	TB[1]	Test Bus	B
74	TB[2]	Test Bus	B
75	VDD	Outer Power	–
76	VSS	GND	–
77	TB[3]	Test Bus	B
78	TB[4]	Test Bus	B
79	TB[5]	Test Bus	B
80	TB[6]	Test Bus	B
81	TB[7]	Test Bus	B
82	TB[8]	Test Bus	B
83	TB[9]	Test Bus	B
84	TB[10]	Test Bus	B
85	TB[11]	Test Bus	B
86	TB[12]	Test Bus	B
87	TB[13]	Test Bus	B
88	VSS	GND	–
89	TB[14]	Test Bus	B
90	TB[15]	Test Bus	B
91	TB[16]	Test Bus	B
92	TB[17]	Test Bus	B
93	TB[18]	Test Bus	B
94	TB[19]	Test Bus	B
95	TB[20]	Test Bus	B
96	TB[21]	Test Bus	B
97	TB[22]	Test Bus	B
98	TB[23]	Test Bus	B
99	TB[24]	Test Bus	B
100	VSS	GND	–

■ MC74HC74AF 【MOTOROLA】
(Dual D-Type Positive-EDGE-Triggered Flip-Flops With Preset AND Clear)

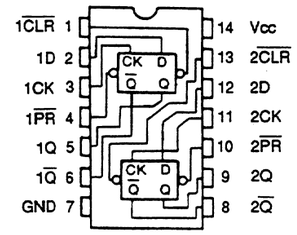

(Top View)

TRUE Table

INPUTS				OUTPUTS		FUNCTION
$\overline{CLR}$	$\overline{PR}$	D	CK	Q	$\overline{Q}$	
L	H	X	X	L	H	CLEAR
H	L	X	X	H	L	PRESET
L	L	X	X	H	H	—
H	H	L	↑	L	H	—
H	H	H	↑	H	L	—
H	H	X	↓	Q_n	$\overline{Q}_n$	NO CHANGE

X : Don't care

■ MM1111XF 【MITSUMI】
(2 Input 1 Output Video Switch)

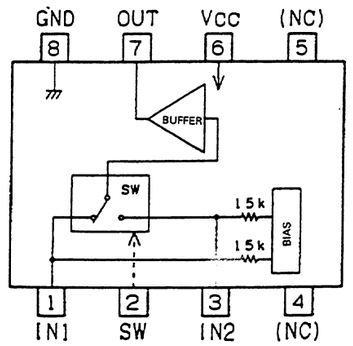

TRUTH TABLE

SW	OUT
L	IN1
H	IN2

IC-15

■ MC34051P 【MOTOROLA】
(Dual EIA-422/423 Transceiver)

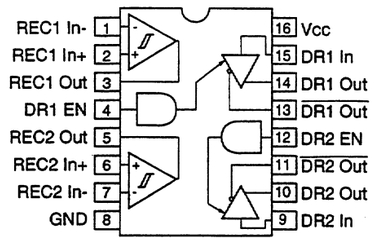

RECEIVER BLOCK DIAGRAM

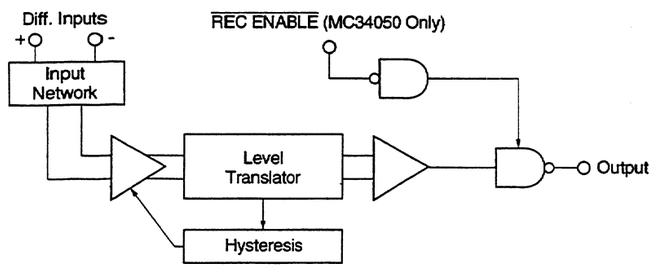

DRIVRE BLOCK DIAGRAM

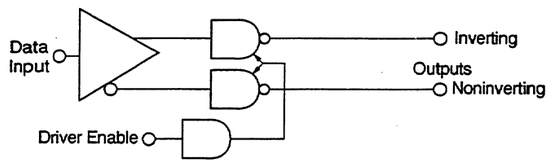

■ MM74HC4046M
【NATIONAL SEMICONDUCTOR】
(CMOS Phase Lock Loop)

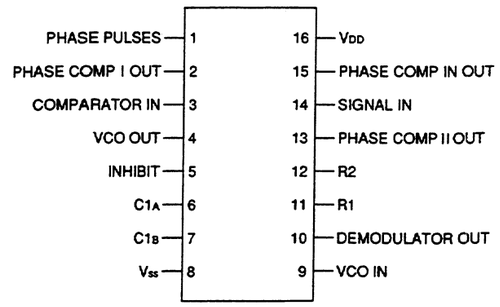

Top View

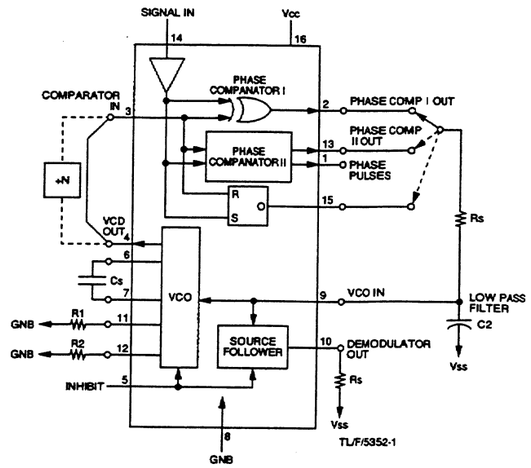

■ MN67371F 【MATSUSHITA】
(SD-DVC Format Video Compression/ Decompression LSI)

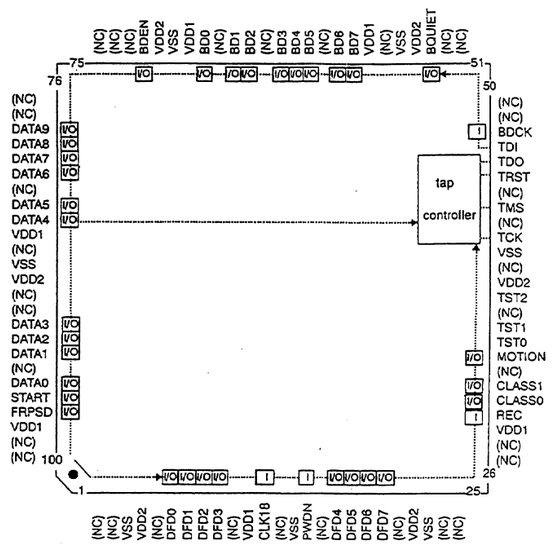

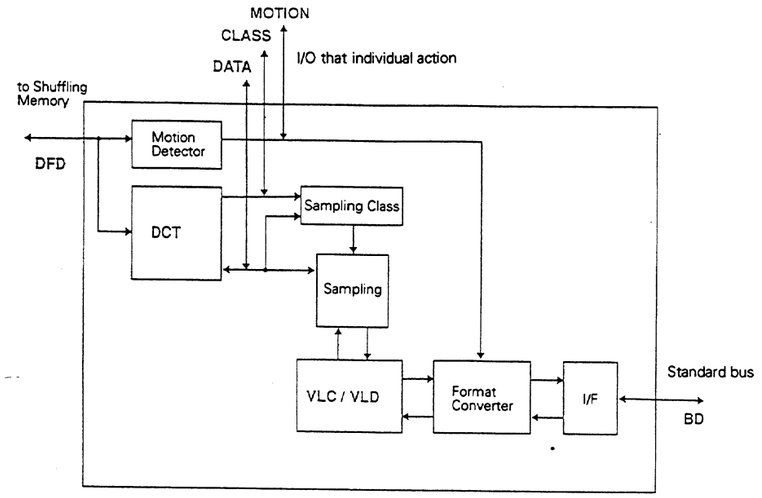

■ NJM1496M 【JRC】
(Balanced Modulator)

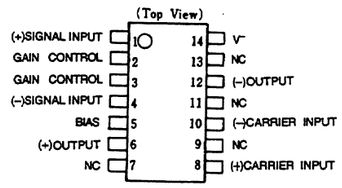

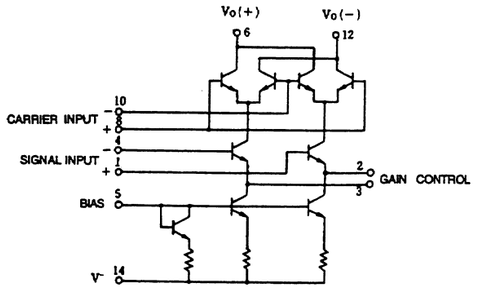

■ NJM2068MD 【JRC】
(Dual Low-Noise Op.Amp)

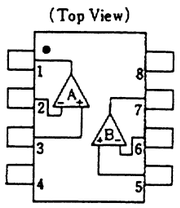

1. A OUTPUT
2. A-INPUT
3. A+INPUT
4. V-
5. B+INPUT
6. B-INPUT
7. B OUTPUT
8. V+

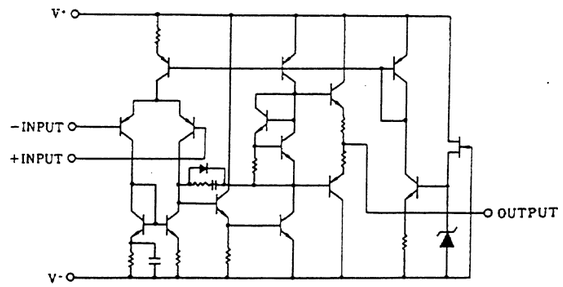

IC-16

■ MSM6338MS 【OKI】
(Digital Peak Detector for PCM Audio)

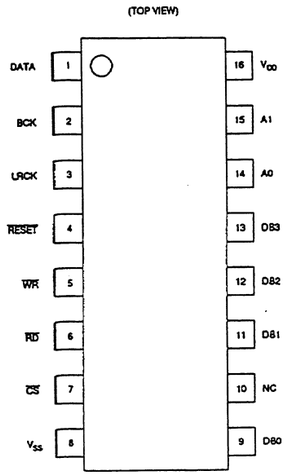

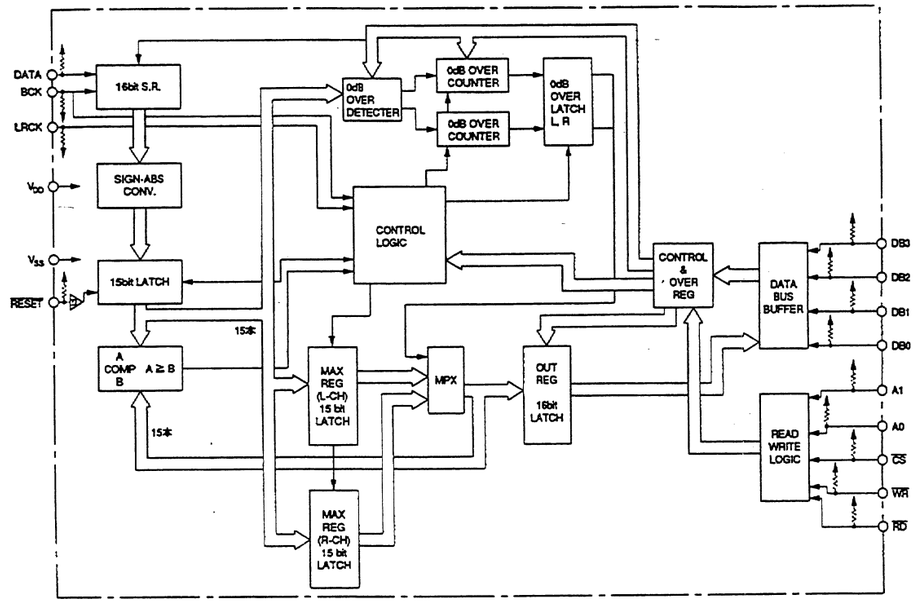

■ PCM1710U(G)/T2 【BAR BRAWN】
(D/A Converter)

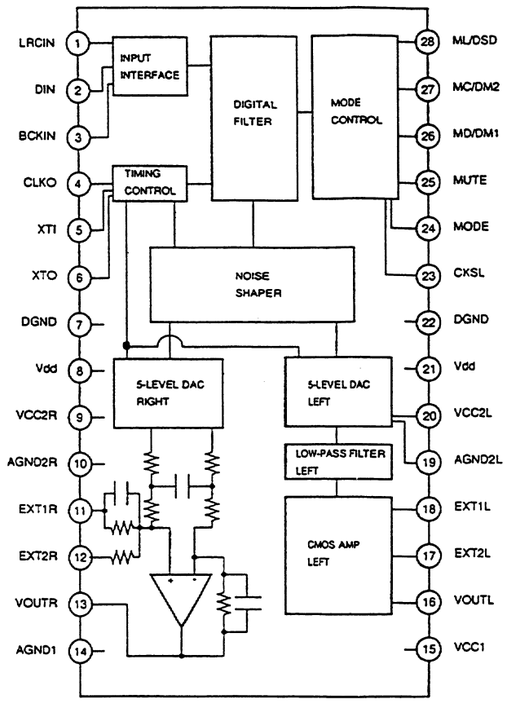

■ S-81224PG-PX-X 【SEIKO】
(Voltage Regulator)

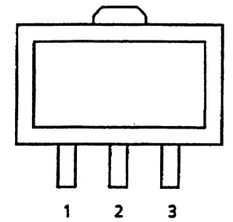

■ S-81240PG-PJ-X 【SEIKO】
(Refer to S-81224PG-PX-X.)

■ NJM2234M 【JRC】
(3 Input Single Video Switch)

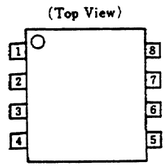

1. $V_{in}1$
2. SW1
3. $V_{in}2$
4. SW2
5. $V_{in}3$
6. V^+
7. V_{out}
8. GND

■ NJM4560M 【JRC】
(Dual Op.Amp)

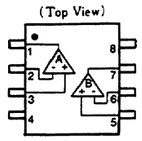

1. A OUTPUT
2. A−INPUT
3. A+INPUT
4. V^-
5. B+INPUT
6. B−INPUT
7. B OUTPUT
8. V^+

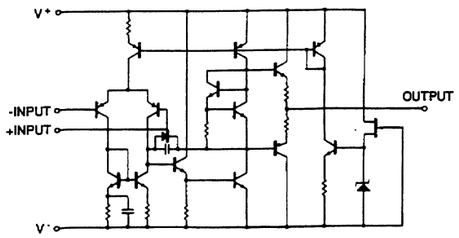

■ NJM7805FA 【JRC】
(3-Terminal Positive Voltage Regulator (+5V))

1. OUT
2. GND
3. IN

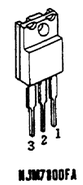

NJM7800FA

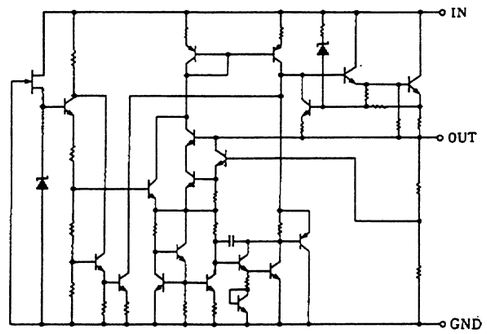

■ NJM79L12UA 【JRC】
(Refer to NJM79L05UA.)

■ NJM79L05UA 【JRC】
(3-Terminal Negative Voltage Regulator (−5V))

1. COMMON
2. IN
3. OUT

NJM79L00UA

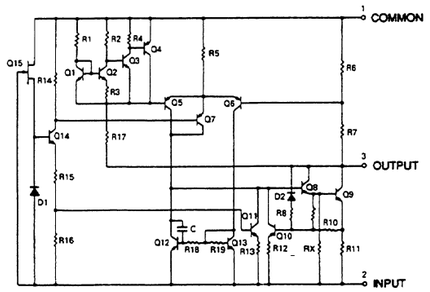

■ NJM79M05FA 【JRC】
(3-Terminal Negative Voltage Regulator (−5V))

1. OUT
2. IN
3. COMMON

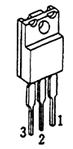

NJM7900FA

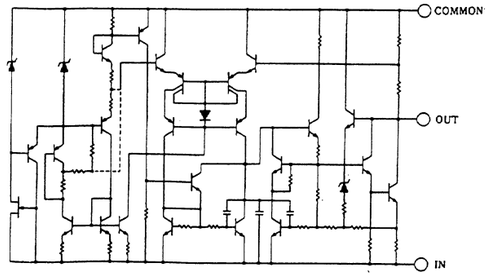

■ SC78148GF–026 【JVC】
(8-Bit Micro Computer)

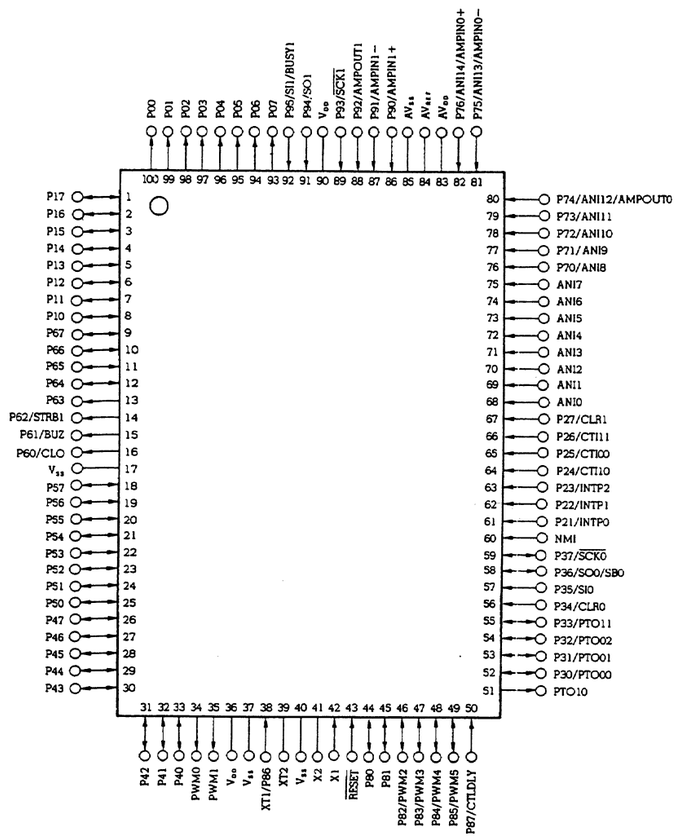

■ SN74CBT3245PW 【TEXAS】
(8 Bit Cross Bar Switch)

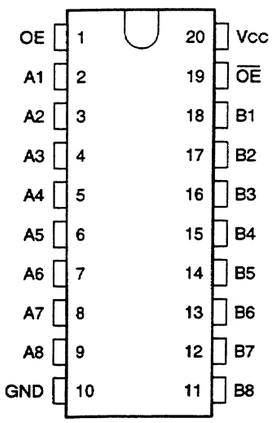

(Top View)

Inputs		Inputs/Outputs
OE	$\overline{OE}$	A, B
X	L	A=B
H	X	A=B
L	H	Z

H : High Level
L : Low Level
X : Don't Care
Z : High Impedance

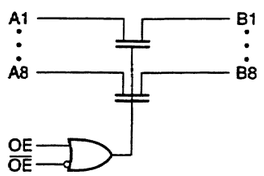

■ SN74CBT3384PW 【TEXAS】
(10 Bit Cross Bar Switch)

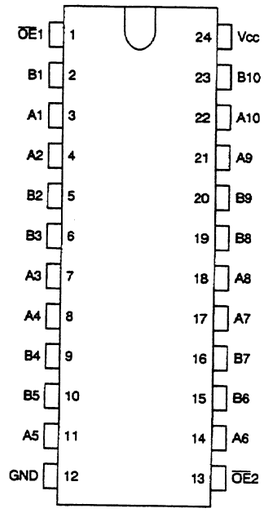

Top View

$\overline{OE1}$	$\overline{OE2}$	B1 – B5	B6 – B10
L	L	A1 – A5	A6 – A10
L	H	A1 – A5	Z
H	L	Z	A6 – A10
H	H	Z	Z

H : High Level
L : Low Level
X : Don't Care
Z : High Impedance

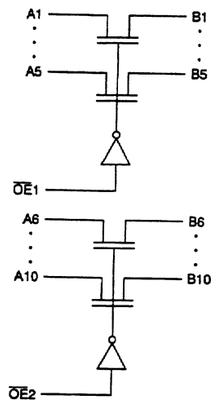

■ SSI32F8001 【TDK】
(Low-Power Programmable Electronic Filter)

BLOCK DIAGRAM

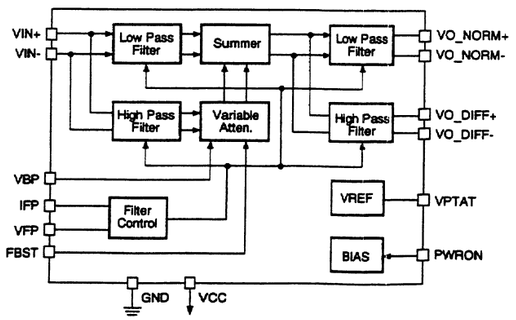

PIN DIAGRAM

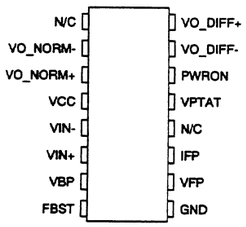

16-Lead SOL, SON

CAUTION: Use handling procedures necessary for a static sensitive component.

■ TA8405S 【TOSHIBA】
(DC Motor Driver)

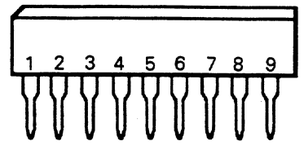

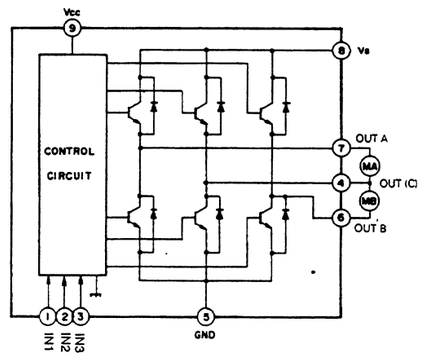

TRUTH TABLE

INPUT			INPUT			MODE	
IN 1	IN 2	IN 3	OUT (C)	OUT A	OUT B	MA	MB
0	0	1/0	*	*	*	STOP	STOP
1	0	0	H	L	*	CW/CCW	STOP
1	0	1	L	H	*	CCW/CW	STOP
0	1	0	H	*	L	STOP	CW/CCW
0	1	1	L	*	H	STOP	CCW/CW
1	1	1/0	L	L	L	BRAKE	BRAKE

*: High Impedance

■ SN74LS04NS–TL 【TEXAS】
(Hex Inverters)

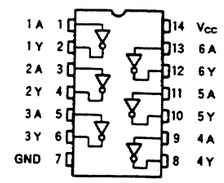

(TOP VIEW)

■ SN74LS04NSL 【TEXAS】
(Refer to SN74LS04NS–TL.)

IC-18

■ TA8609F 【TOSHIBA】
(4-Ch PRE AMP)

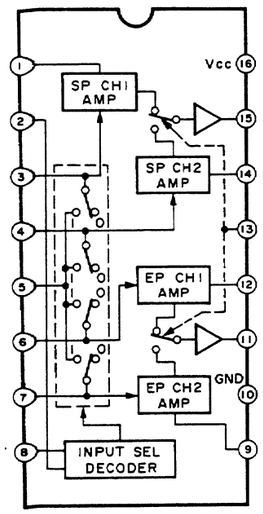

■ TC4013BF 【TOSHIBA】
(Dual D-Type Flip Flop)

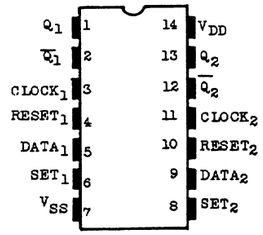

(TOP VIEW)

BLOCK DIAGRAM

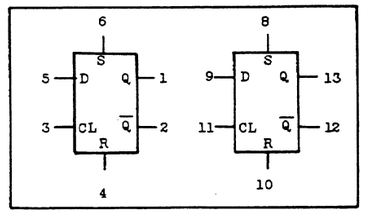

TRUTH TABLE

INPUTS				OUTPUTS	
RESET	SET	DATA	CLOCK △	Qn+1	$\overline{Qn+1}$
L	H	✱	✱	H	L
H	L	✱	✱	L	H
H	H	✱	✱	H	H
L	L	L	↓	L	H
L	L	H	↓	H	L
L	L	✱	↑	Qn•	$\overline{Qn}$•

✱ : Don't Care
△ : Level Change
• : No Change

■ TC4021BF 【TOSHIBA】
(8 Stage Static Shift Register)

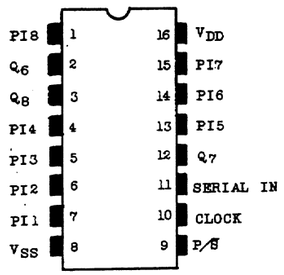

(TOP VIEW)

TRUTH TABLE

INPUTS					OUTPUTS △	
CLOCK △△	P/S	PI_1	PI_n	SI	Q1	Qn
↓	L	✱	✱	L	L	Qn−1
↓	L	✱	✱	H	H	Qn−1
↑	L	✱	✱	✱	No Change	
✱	H	L	L	✱	L	L
✱	H	L	H	✱	L	H
✱	H	H	L	✱	H	L
✱	H	H	H	✱	H	H

n : 2 ~ 8
△ : $Q_1 \sim Q_5$ Internal
△△ : Level
✱ : Don't Care

LOGIC DIAGRAM

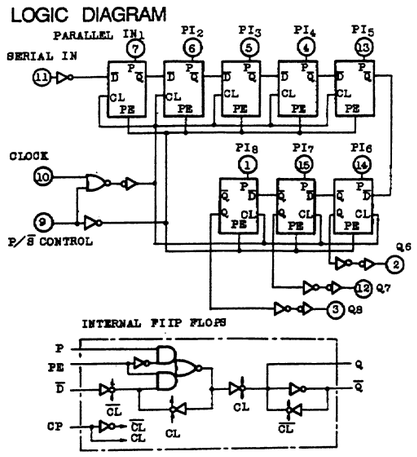

■ TC4053BF 【TOSHIBA】
(Triple 2 Channel Analog Multiplexers/ Demultiplexers)

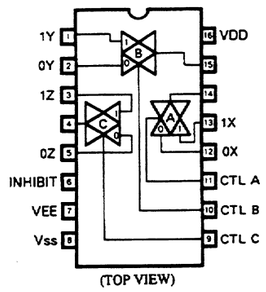

(TOP VIEW)

TRUTH TABLE

CONTROL INPUTS				"ON" CHANNEL
INHIBIT	C	B	A	4053BP 4053BF
L	L	L	L	0X, 0Y, 0Z
L	L	L	H	1X, 0Y, 0Z
L	L	H	L	0X, 1Y, 0Z
L	L	H	H	1X, 1Y, 0Z
L	H	L	L	0X, 0Y, 1Z
L	H	L	H	1X, 0Y, 1Z
L	H	H	L	0X, 1Y, 1Z
L	H	H	H	1X, 1Y, 1Z
H	*	*	*	NOTE

* Don't Care.

■ TC4051BF 【TOSHIBA】
(Single 8 Channel Analog Multiplexers/ Demultiplexers)

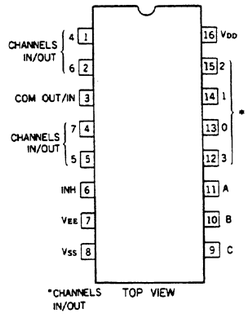

TRUTH TABLE

CONTROL INPUTS				"ON" CHANNEL
INHIBIT	C	B	A	4051
L	L	L	L	0
L	L	L	H	1
L	L	H	L	2
L	L	H	H	3
L	H	L	L	4
L	H	L	H	5
L	H	H	L	6
L	H	H	H	7
H	✱	✱	✱	NONE

✱ Don't Care.

LOGIC DIAGRAM

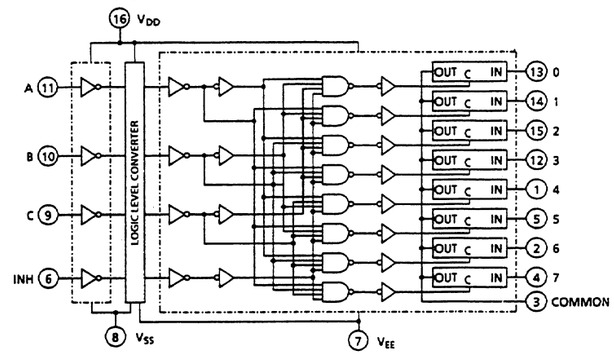

■ TC4538BF 【TOSHIBA】
(Dual Precision Monostable Multivibrator)

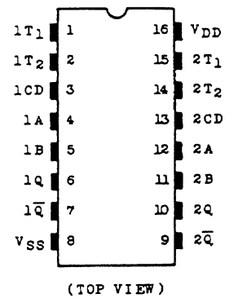

(TOP VIEW)

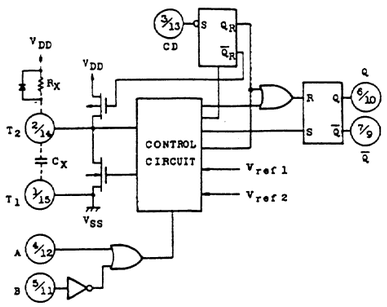

TRUTH TABLE

INPUT			OUTPUT		NOTE
A	B	CD	Q	Q̄	
↓	H	H	⊓	⊔	OUTPUT ENABLE
↓	L	H	L	H	INHIBIT
H	↓	H	L	H	INHIBIT
L	↑	H	⊓	⊔	OUTPUT ENABLE
✱	✱	L	L	H	INHIBIT

✱ Don't Care

■ TC4066BF 【TOSHIBA】
(Quad Bilateral Switch)

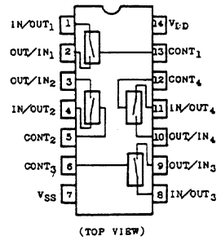

(TOP VIEW)

TRUTH TABLE

CONTROL	Impedance Between IN/OUT-OUT/IN ✱
H	$0.5 \sim 5 \times 10^2 \Omega$
L	$> 10^9 \Omega$

LOGIC DIAGRAM

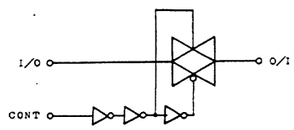

IC-19

■ TC4094BF 【TOSHIBA】
(8 Stage Bus Compatible Shift/Store Register)

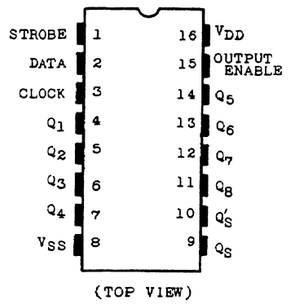

TRUTH TABLE

CL	OE	ST	D	PO		SO	
				Q_1	Q_n	Q_S	Q'_S
↑	H	H	L	L	Q_n-1	Q_7	NC
↑	H	H	H	H	Q_n-1	Q_7	NC
↑	H	L	*	NC	NC	Q_7	NC
↑	L	*	*	HZ	HZ	Q_7	NC
↓	H	*	*	NC	NC	NC	Q_S
↓	L	*	*	HZ	HZ	NC	Q_S

CL = Clock
OE = Output Enable
ST = Strobe
D = Data
PO = Parallel Outputs
SO = Serial Output
* = Don't care
NC = No Change
HZ = High Impedance

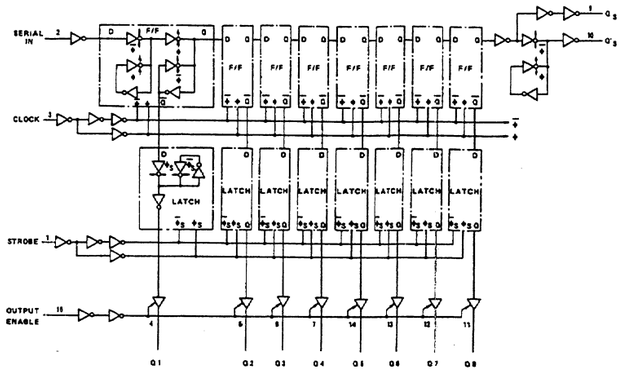

BLOCK DIAGRAM

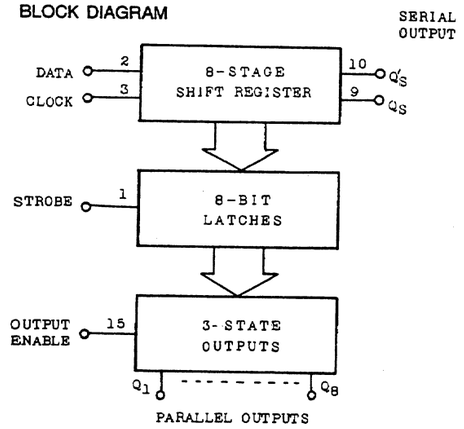

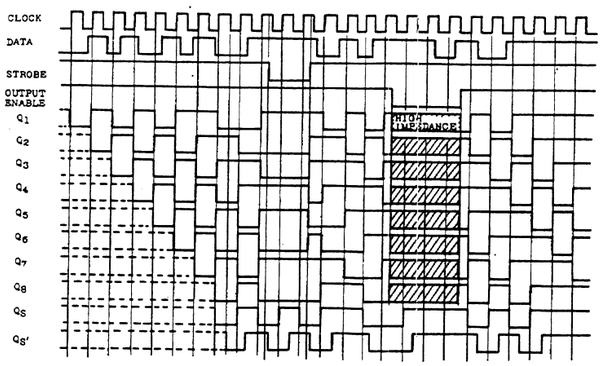

■ TC528267FT-70 【TOSHIBA】
(262,144 word x 8 Bit Multiport Dynamic RAM)

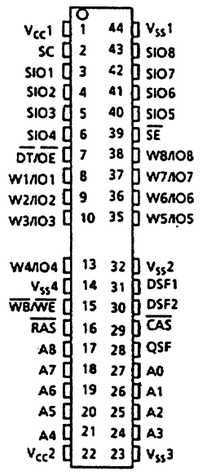

(Top View)

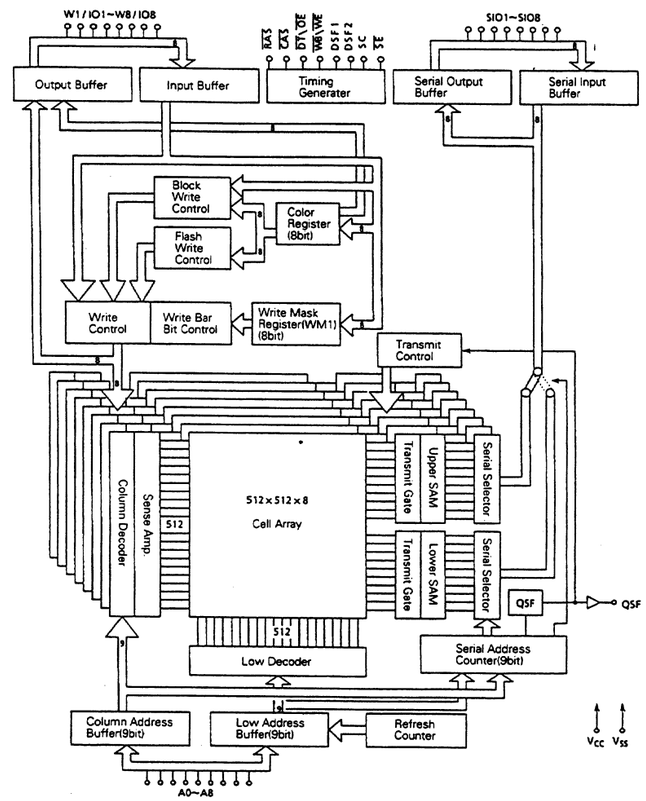

■ TC5564AFL-15 【TOSHIBA】
(8,192 Word x 8 bit CMOS Static Random Access Memory)

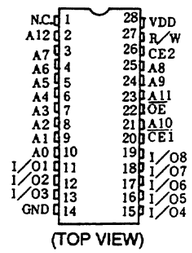

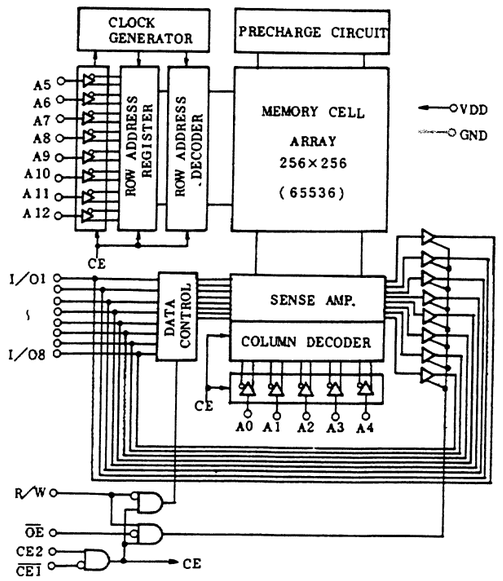

■ TC4W53F 【TOSHIBA】
(2-Channel Multiplexer)

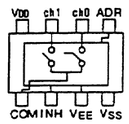

■ TC74ACT541F 【TOSHIBA】
(Octal Bus Buffer (3-State))

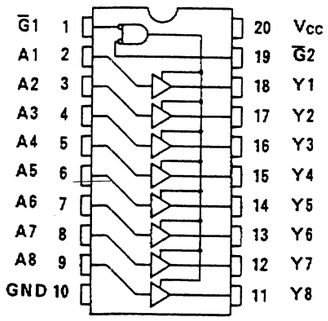

■ TC74HC00AF 【TOSHIBA】
(Quad 2-Input NAND Gates)

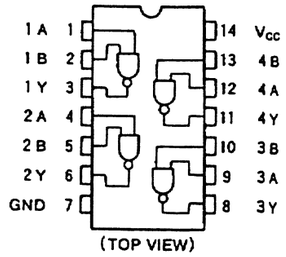

TRUE Table

A	B	Y
L	L	H
L	H	H
H	L	H
H	H	L

■ TC74HC04AF 【TOSHIBA】
(Refer to SN74LS04NS-TL.)

IC-20

■ TC74HC08AF 【TOSHIBA】
(Quad 2-Input AND Gates)

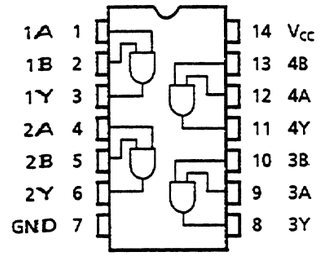

(TOP VIEW)

TRUE Table

A	B	Y
L	L	L
L	H	L
H	L	L
H	H	H

■ TC74HC107AF 【TOSHIBA】
(Triple 3-Input NAND Gates)

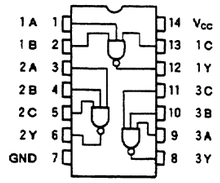

(TOP VIEW)

TRUE Table

A	B	C	Y
L	X	X	H
X	L	X	H
X	X	L	H
H	H	H	L

X : Don't Care

■ TC74HC11AF 【TOSHIBA】
(Triple 3-Input AND Gates)

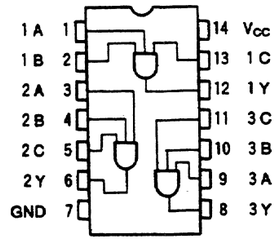

(TOP VIEW)

TRUE Table

A	B	C	Y
L	X	X	L
X	L	X	L
X	X	L	L
H	H	H	H

X : Don't Care

■ TC74HC125AF 【TOSHIBA】
(Quad Bus Buffer Gates With 3-State Outputs)

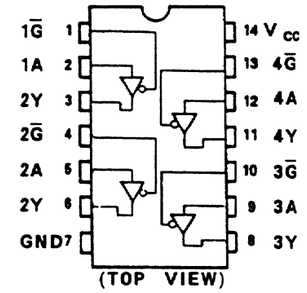

(TOP VIEW)

TC74HC125A TRUE Table

INPUTS		OUTPUTS
G	A	Y
H	X	Z
L	L	L
L	H	H

X : Don't Care
Z : High Impedance

■ TC74HC126AF 【TOSHIBA】
(Quad 2-Input NAND Gate)

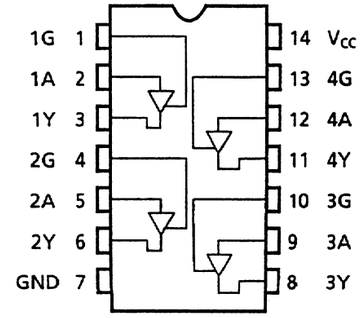

(TOP VIEW)

INPUTS		OUTPUTS
G	A	Y
L	X	Z
H	L	L
H	H	H

X: Don't Care
Z : High Impedance

■ TC74HC138AF 【TOSHIBA】
(3-Line to 8-Line Decoders/Demultiplexers)

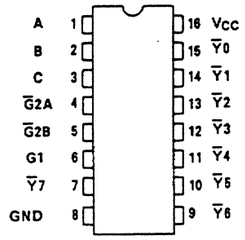

(TOP VIEW)

TRUE Table

INPUTS						OUTPUTS								SELECTED OUTPUT
ENABLE			SELECT											
G1	G2A	G2B	C	B	A	Y0	Y1	Y2	Y3	Y4	Y5	Y6	Y7	
L	X	X	X	X	X	H	H	H	H	H	H	H	H	NONE
X	H	X	X	X	X	H	H	H	H	H	H	H	H	NONE
X	X	H	X	X	X	H	H	H	H	H	H	H	H	NONE
H	L	L	L	L	L	L	H	H	H	H	H	H	H	Y0
H	L	L	L	L	H	H	L	H	H	H	H	H	H	Y1
H	L	L	L	H	L	H	H	L	H	H	H	H	H	Y2
H	L	L	L	H	H	H	H	H	L	H	H	H	H	Y3
H	L	L	H	L	L	H	H	H	H	L	H	H	H	Y4
H	L	L	H	L	H	H	H	H	H	H	L	H	H	Y5
H	L	L	H	H	L	H	H	H	H	H	H	L	H	Y6
H	L	L	H	H	H	H	H	H	H	H	H	H	L	Y7

X : DONT' CARE

■ TC74HC161AF 【TOSHIBA】
(Synchronous 4-Bit Counters Binary, Direct Clear)

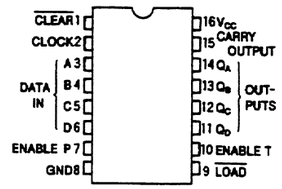

(TOP VIEW)

• THRU TABLE

74HC160A/161A									
INPUTS					OUTPUTS				FUNCTION
CLR	LD	ENP	ENT	CK	Q_A	Q_B	Q_C	Q_D	
L	X	X	X	X	L	L	L	L	Reset to "0"
H	L	X	X	↑	A	B	C	D	Preset Data
H	H	X	L	↑	No change				Do not count
H	H	L	X	↑	No change				Do not count
H	H	H	H	↑	Count up				Count
H	X	X	X	↓	No change				Do not count

Note X : Don't care
A,B,C,D : Logic level of input data
Carry : CARRY=ENT·Q_A·Q_B·Q_C·Q_D·····(TC74HC161A)

Timing chart

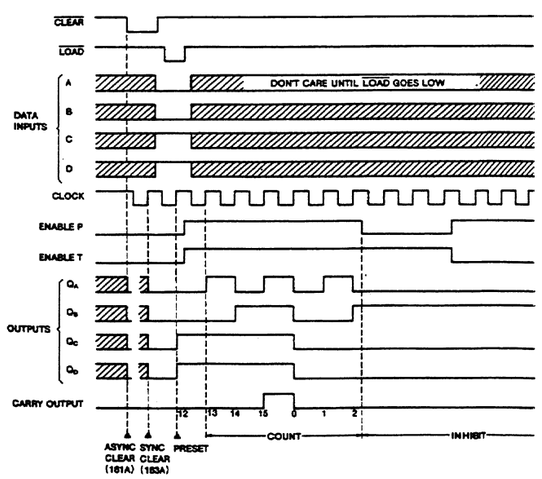

■ TC74HC32AF 【TOSHIBA】
(Quad 2-Input OR Gates)

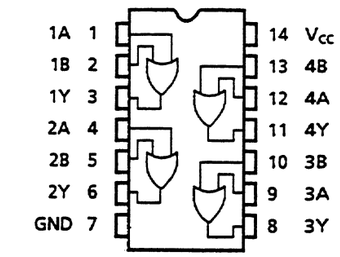

(TOP VIEW)

TRUE Table

A	B	Y
H	H	H
L	H	H
H	L	H
L	L	L

IC-21

■ TC74HC30AF 【TOSHIBA】
(8-Input NAND Gates)

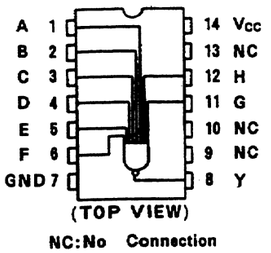

(TOP VIEW)

NC:No Connection

Schematic Diagram

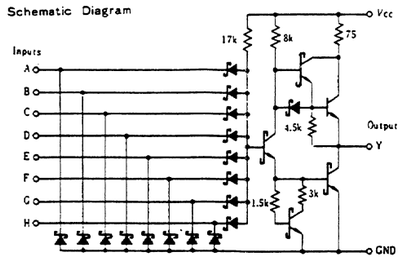

TRUE Table

INPUTS								OUTPUTS
A	B	C	D	E	F	G	H	
H	H	H	H	H	H	H	H	L
L	X	X	X	X	X	X	X	H
X	L	X	X	X	X	X	X	H
X	X	L	X	X	X	X	X	H
X	X	X	L	X	X	X	X	H
X	X	X	X	L	X	X	X	H
X	X	X	X	X	L	X	X	H
X	X	X	X	X	X	L	X	H

■ TC74HC373AF 【TOSHIBA】
(Octal D-Type Latch With NON-Inverted 3-State Output)

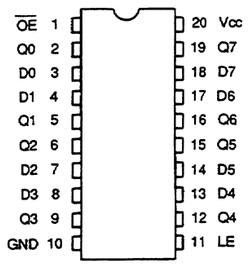

(Top View)

TRUE Table

INPUTS			OUTPUTS
OE	LE	D	
H	X	X	Z
L	L	X	Q_n
L	H	L	L
L	H	H	H

X : Don't Care
Z : Hi impedance
Qn : Q output level before the LE become "L".

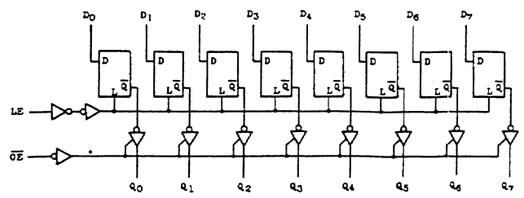

■ TC74HC4040AF 【TOSHIBA】
(Synchronous 12-Bit Binary Ripple Counters)

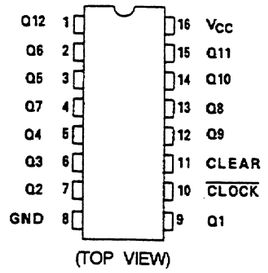

(TOP VIEW)

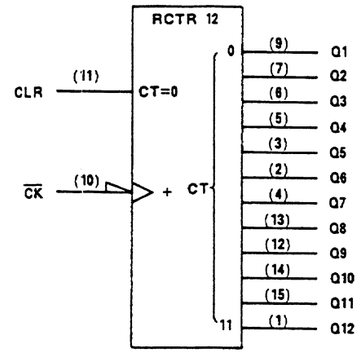

TRUTH TABLE

CLOCK	CLEAR	OUTPUT STATE
X	H	ALL OUTPUTS = "L"
↓	L	NO CHANGE
↑	L	ADVANCE TO NEXT STATE

X ; Don't care

Timing chart

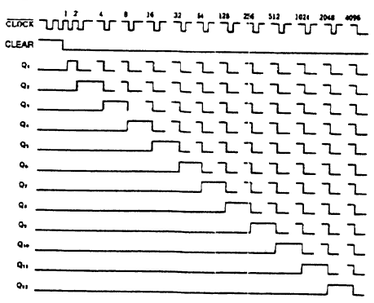

■ TC74HC4066AF 【TOSHIBA】
(Quad Analog Switches)

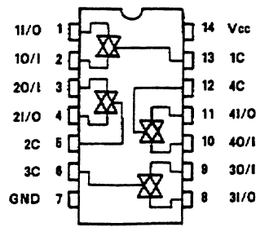

(TOP VIEW)

TRUE Table

CONTROL	SWITCH FUNCTION
H	ON
L	OFF

■ TC74HC4053AF 【TOSHIBA】
(Triple 2-Channel Analog Multiplexer/ Demultiplexer)

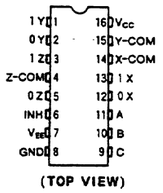

(TOP VIEW)

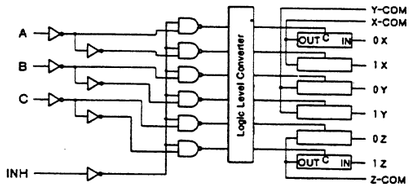

TRUE Table

CONTROL INPUTS				"ON" CHANNEL
INHIBIT	C*	B	A	HC4053A
L	L	L	L	0X, 0Y, 0Z
L	L	L	H	1X, 0Y, 0Z
L	L	H	L	0X, 1Y, 0Z
L	L	H	H	1X, 1Y, 0Z
L	H	L	L	0X, 0Y, 1Z
L	H	L	H	1X, 0Y, 1Z
L	H	H	L	0X, 1Y, 1Z
L	H	H	H	1X, 1Y, 1Z
H	X	X	X	NONE

X : DON'T CARE

■ TC74HC573AF 【TOSHIBA】
(Octal D-Type Latch With NON-Inverted 3-State Outputs)

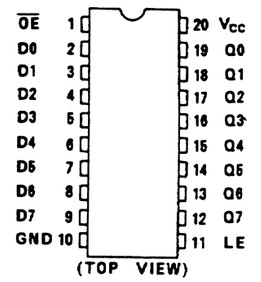

(TOP VIEW)

TRUE Table

INPUTS			OUTPUTS
OE	LE	D	Q
H	X	X	HZ
L	L	X	Q_n
L	H	L	L
L	H	H	H

X : Don't care.
Z : Hi impedance
Qn : Level of Q output before LE becomes "L".

■ TC74HC590AF 【TOSHIBA】
(8 Bit Binaly Counter/Register with 3 State Outputs)

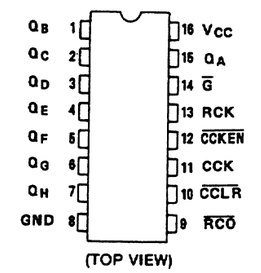

(TOP VIEW)

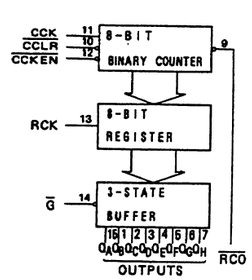

■ TC74HC4538AF 【TOSHIBA】
(Dual Retriggerable Monostable Multivibrator)

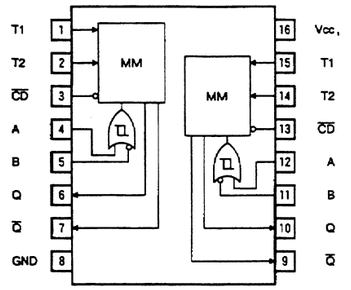

TOP VIEW

TRUE Table

INPUT			OUTPUT		NOTE
A	B	CD	Q	Q	
↓	H	H	⊓	⊔	OUTPUT ENABLE
X	L	H	L	H	INHIBIT
H	X	H	L	H	INHIBIT
L	↑	H	⊓	⊔	OUTPUT ENABLE
X	X	L	L	H	INHIBIT

X:Don't Care

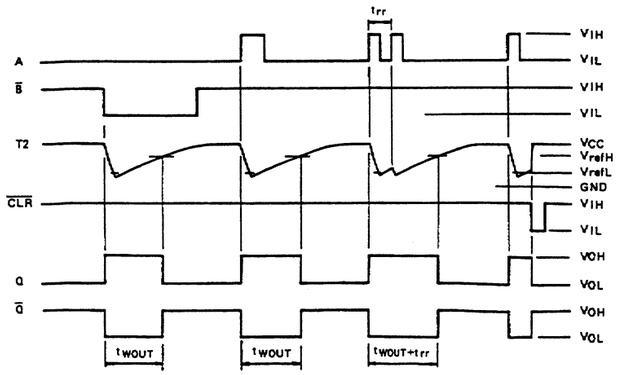

■ TC74HC74AF 【TOSHIBA】
(Refer to MC74HC74AF.)

■ TC74HC86AF 【TOSHIBA】
(Quad 2-Input Exclusive-OR Gates)

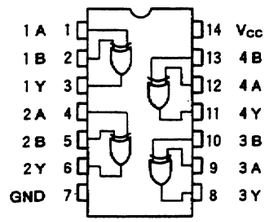

(TOP VIEW)

TRUE Table

A	B	Y
H	H	L
L	H	H
H	L	H
L	L	L

■ TC74HCT245AF 【TOSHIBA】
(Octal Bus Transceivers With NON-Inverted 3-State Outputs)

(TOP VIEW)

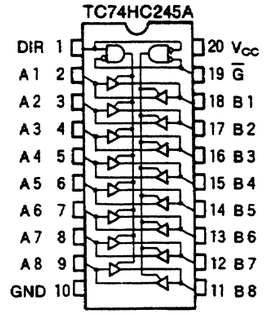

(TOP VIEW)

TRUE Table

INPUT		FANCTION		OUTPUT
G	DIR	A BUS	B BUS	HC245A
L	L	OUTPUT	INPUT	A=B
L	H	INPUT	OUTPUT	B=A
H	X	HIIMPEDANCE		Z

X : Don't care
Z : Hi impedance

■ TC74HCT541AF 【TOSHIBA】
(Octal Bus Buffer With Inverted 3-State Outputs)

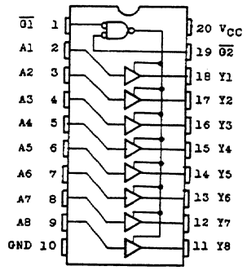

(TOP VIEW)

TRUE Table

INPUT			OUTPUT
G1	G2	A	Y
L	L	H	H
L	L	L	L
H	X	X	Z
X	H	X	Z

■ TC74VHC123AF 【TOSHIBA】
(Dual Retriggerable Monostable Multivibrators)

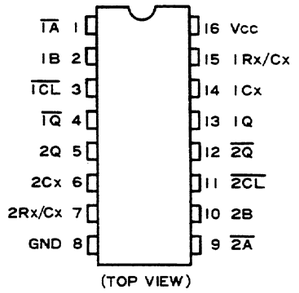

(TOP VIEW)

TRUE Table

INPUTS			OUTPUTS		NOTE
A	B	OL	Q	Q	
↓	H	H	⊓	⊔	OUTPUT ENABLE
X	L	H	L	H	INHIBIT
H	X	H	L	H	INHIBIT
L	↓	H	⊓	⊔	OUTPUT ENABLE
L	H	↓	⊓	⊔	OUTPUT ENABLE
X	X	L	L	H	INHIBIT

X:DON'T CARE

■ TC74VHC163F 【TOSHIBA】
(Synchronous 4-Bit Counters Binary, Synchronous Clear)

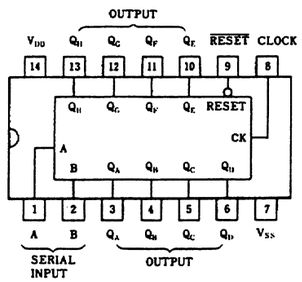

True table

Input			output
RESET	CLOCK	A B	Q_A Q_B ····· Q_H
L	X	X X	L L ····· L
H		X X	No change
H	↑	L X	L Q_A ····· Q_G
H	↑	X L	L Q_A ····· Q_G
H	↑	H H	H Q_A ····· Q_G

H : Hi Level L : Low Level X : H or L

Timing chart

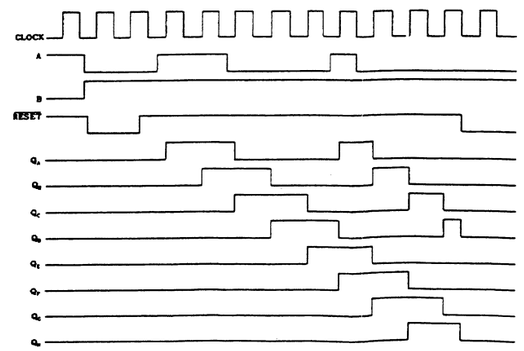

■ TC74VHC00F 【TOSHIBA】
(Refer to TC74HC00AF.)

■ TC74VHC04F 【TOSHIBA】
(Refer to SN74LS04NS-TL.)

■ TC74VHC125F 【TOSHIBA】
(Refer to TC74HC125AF.)

■ TC74VHC126F 【TOSHIBA】
(Refer to TC74HC126AF.)

IC-23

■ TC74VHC153F 【TOSHIBA】
(Dual 4-Channel Multiplexer)

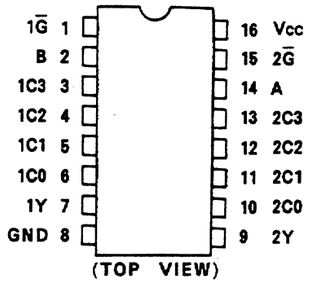

TRUTH TABLE

SELECT INPUTS		DATA INPUTS				STROBE	OUTPUT Y	
B	A	C0	C1	C2	C3	G̅	HC153A	HC253A
X	X	X	X	X	X	H	L	Z
L	L	L	X	X	X	L	L	L
L	L	H	X	X	X	L	H	H
L	H	X	L	X	X	L	L	L
L	H	X	H	X	X	L	H	H
H	L	X	X	L	X	L	L	L
H	L	X	X	H	X	L	H	H
H	H	X	X	X	L	L	L	L
H	H	X	X	X	H	L	H	H

X : Don't Care
Z : High Impedance

BLOCK DIAGRAM

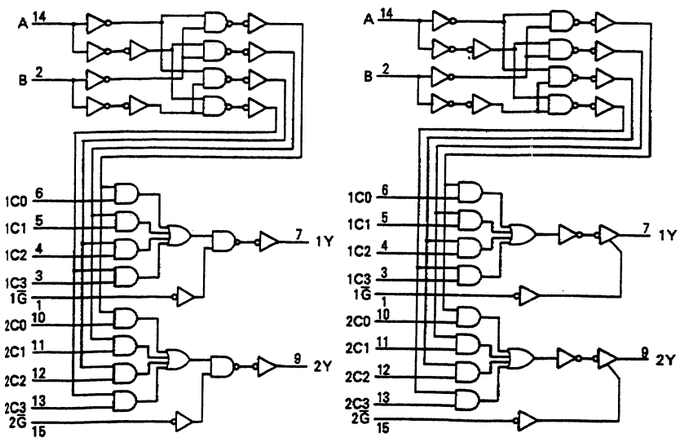

■ TC74VHC164F 【TOSHIBA】
(8-Bit Serial Input/Parallel Output Shift Registers,Synchronous Clear)

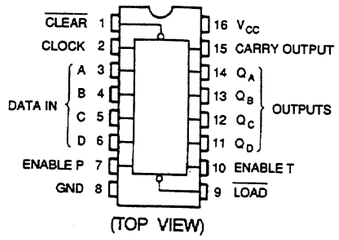

TRUE Table

SN74HC163N									
INPUTS					OUTPUTS				FUNCTION
CLR̅	LD̅	PE	TE	CK	Q_A	Q_B	Q_C	Q_D	
L	*	*	*	↑	L	L	L	L	REST TO '0'
H	L	*	*	↑	A	B	C	D	PRESET DATA
H	H	*	L	↑	NO CHANGE				NO COUNT
H	H	L	*	↑	NO CHANGE				NO COUNT
H	H	H	H	↑	COUNT UP				COUNT
*	*	*	*	↓	NO CHANGE				NO COUNT

Note * ; Don't Care
A, B, C, D : Logic Level of Data Inputs
Carry : CARRY = TE·Q_A·Q_B·Q_C·Q_D

Timing chart

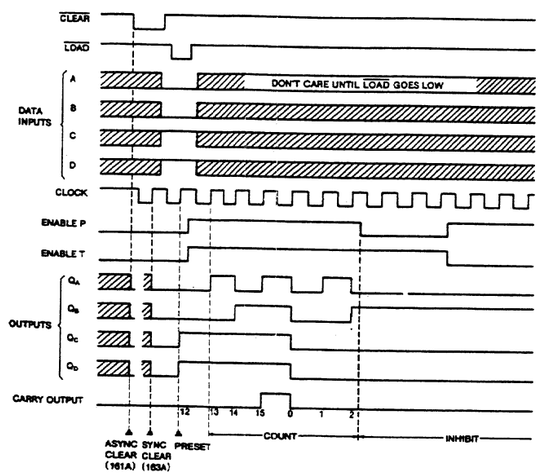

■ TC74VHC221AF 【TOSHIBA】
(Dual Monostable Multivibrators (With Schmitt Trigger Input))

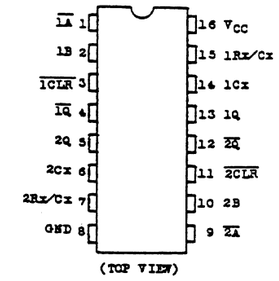

True Table

INPUTS			OUTPUTS		NOTE
A̅	B	CL	Q	Q̅	
⊓	H	H	⊓	⊔	OUTPUT ENABLE
X	L	H	L	H	INHIBIT
H	X	H	L	H	INHIBIT
L	↓	H	⊓	⊔	OUTPUT ENABLE
L	H	↓	⊓	⊔	OUTPUT ENABLE
X	X	L	L	H	INHIBIT

X : DON'T CARE

■ TC74VHC244F 【TOSHIBA】
(Octal Buffers AND Line Drivers With NON-Inverted 3-State Outputs)

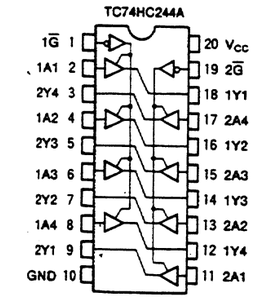

TRUE Table

INPUTS		OUTPUTS
G̅	A_n	$\overline{Y}_n$
L	L	L
L	H	H
H	X	Z

X : Don't Care
Z : High Impedance

■ TC74VHC245F 【TOSHIBA】
(Refer to TC74HCT245AF.)

■ TC74VHC541F 【TOSHIBA】
(Refer to TC74HCT541AF.)

■ TC74VHC74F 【TOSHIBA】
(Refer to MC74HC74AF.)

■ TC74VHC86F 【TOSHIBA】
(Refer to TC74HC86AF.)

■ TC74VHCT04F 【TOSHIBA】
(Refer to SN74LS04NS-TL.)

■ TC74VHCT541F 【TOSHIBA】
(Refer to TC74HCT541AF.)

■ TC74LCX244F 【TOSHIBA】
(Refer to TC74VHC244F)

IC-24

■ TC7S04F 【TOSHIBA】
(Invertor)

Pin arangement

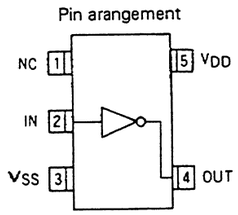

■ TC7S08F 【TOSHIBA】
(2 Input Single AND Gate)

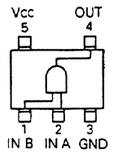

TRUE Table

A	B	X
L	L	L
L	H	L
H	L	L
H	H	H

■ TC7SH08F 【TOSHIBA】
(Refer to TC7S08F.)

■ TC7SU04F 【TOSHIBA】
(Refer to TC7S04F.)

■ TC7W00F 【TOSHIBA】
(2 Input Dual NAND Gate)

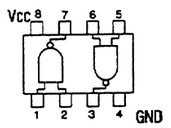

TRUE Table

A	B	X
L	L	H
L	H	H
H	L	H
H	H	L

■ TC7W02F 【TOSHIBA】
(2 Input Dual NOR Gate)

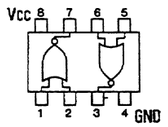

■ TC7W04F 【TOSHIBA】
(Triple Inverter Gate)

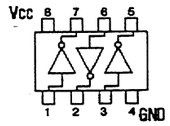

■ TC7W08F 【TOSHIBA】
(2 Input Dual AND Gate)

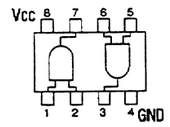

■ TC7W32F 【TOSHIBA】
(2 Input Dual OR Gate)

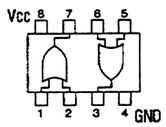

TRUE Table

A	B	X
L	L	L
L	H	H
H	L	H
H	H	H

■ TC7WU04F 【TOSHIBA】
(Triple Unbuffered Inverter Gate)

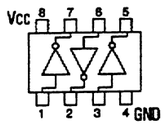

■ TD74BC244F 【TOSHIBA】
(Refer to TC74VHC244F.)

■ TC7W126FU 【TOSHIBA】
(Dual Bus Buffer)

(TOP VIEW)

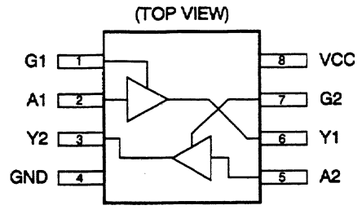

Truth Table

INPUTS		OUTPUTS
G	A	Y
L	X	Z
H	L	L
H	H	H

X : Don't Cate
Z : High Impedance

■ TC7WH74FU 【TOSHIBA】
(D-Q Flip-Flop with Preset and Clear)

(TOP VIEW)

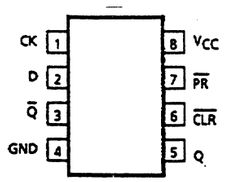

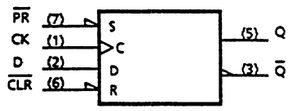

TRUE Table

INPUTS				OUTPUTS		FUNCTION
CLR	PR	D	CK	Q	Q̄	
L	H	×	×	L	H	CLEAR
H	L	×	×	H	L	PRESET
L	L	×	×	H	H	—
H	H	L	↑	L	H	—
H	H	H	↑	H	L	—
H	H	×	↑	Q_n	$\bar{Q}_n$	NO CHANGE

× : Don't care

■ TL431CPS 【TEXAS】
(Regulator)

Top View

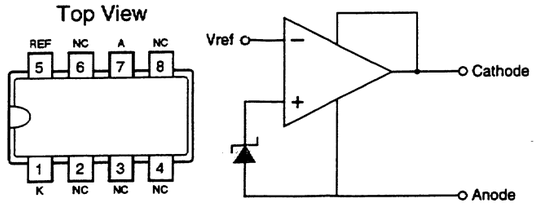

■ TD74BC541F 【TOSHIBA】
(Octal Bus Buffer)

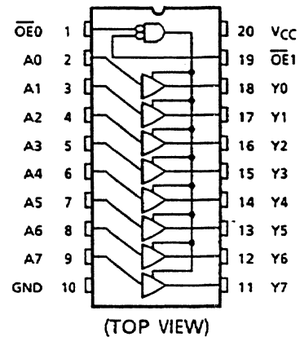

(TOP VIEW)

Truth Table

INPUT			OUTPUT
$\bar{OE}0$	$\bar{OE}1$	An	Yn
H	X	X	Z
X	H	X	Z
L	L	H	H
L	L	L	L

X: Don't Care
Z: High Impedance

■ TK16031MTL 【TOKO】
(Delay line)

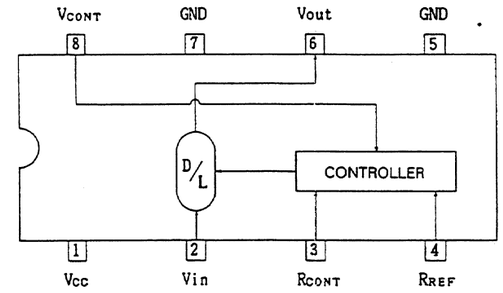

■ TMP91C640N-2381 【TOSHIBA】
(CMOS 8-bit Micro Controller)

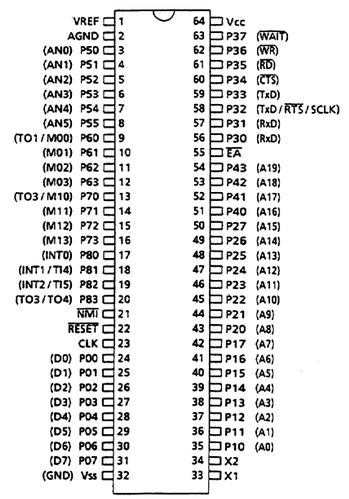

(TOP VIEW)

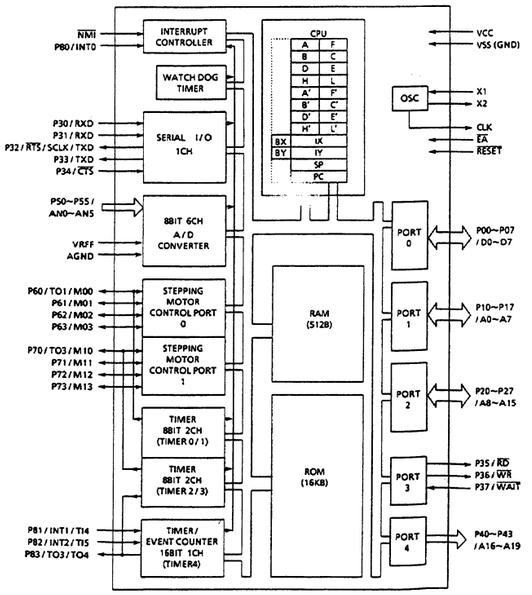

IC-25

■ TMP82C255AN-2 【TOSHIBA】
(CMOS Programmable Peripheral Interface)

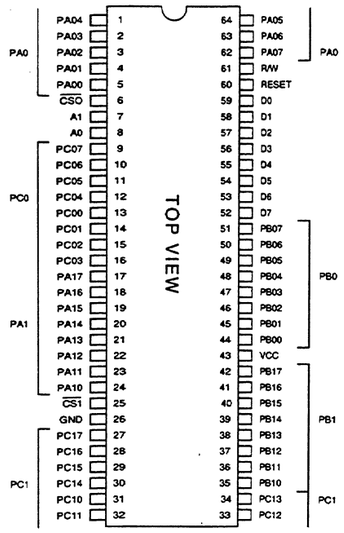

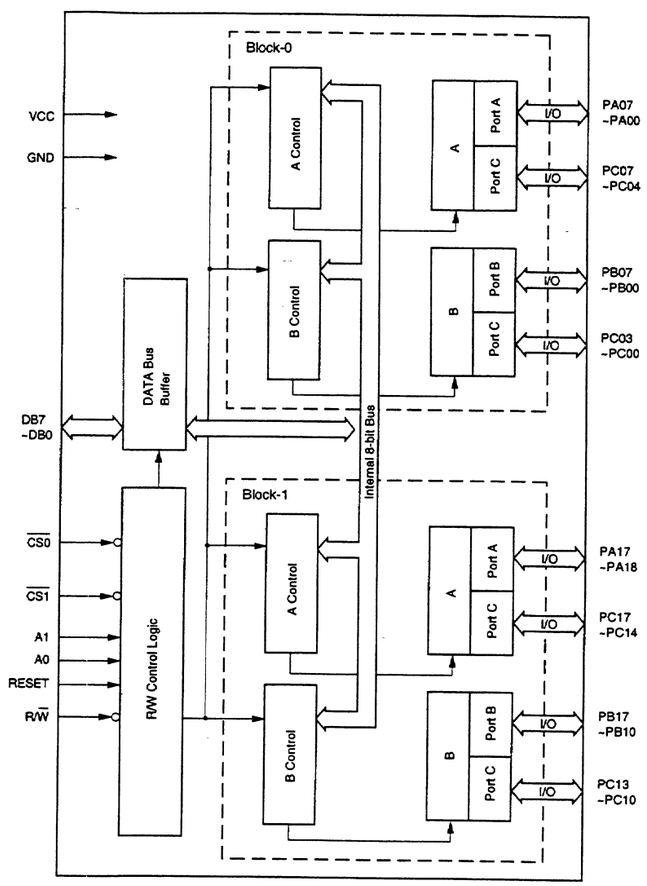

■ TMPZ84C30AM-6 【TOSHIBA】
(CMOS Counter Timer Circuit)

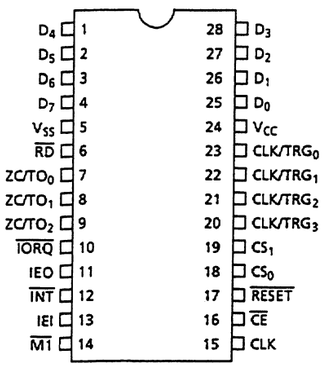

(TOP VIEW)

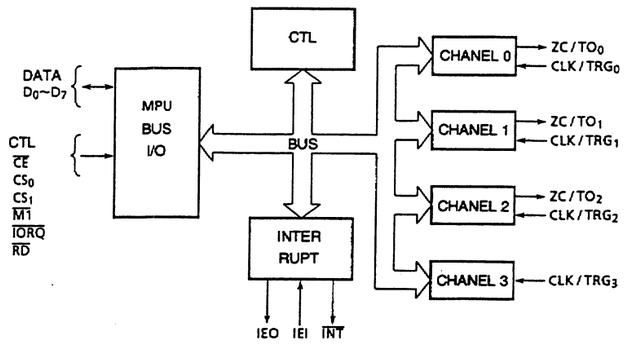

■ UPC311G2 【NEC】
(Comparator)

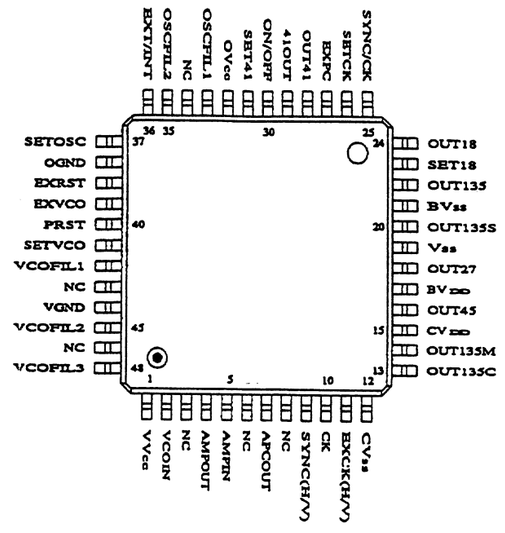

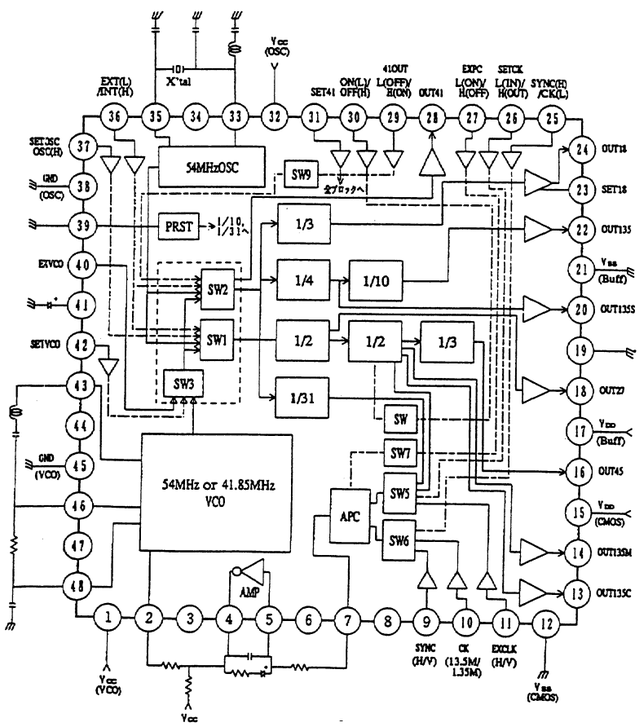

■ UPC2384GA 【NEC】
(Digital VTR PLL)

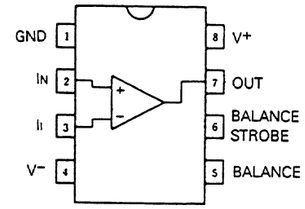

(Top View)

■ UPC358G2 【NEC】
(Dual Op.Amp.)

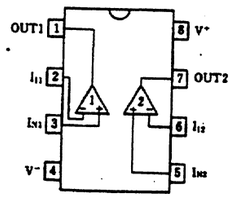

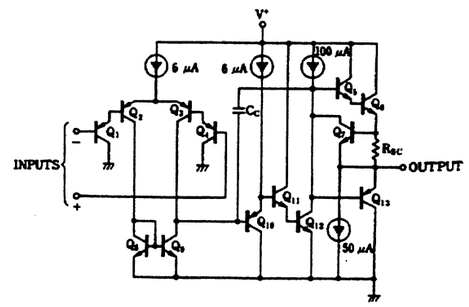

■ UPC4082G2 【NEC】
(J-FET Input Dual Op-Amplifire)

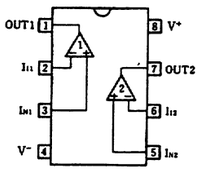

(TOP VIEW)

IC-26

■ UPC4074G2 【NEC】
(Low Noise J-FET Quad Op.Amp)

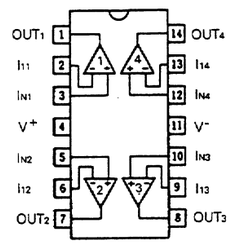

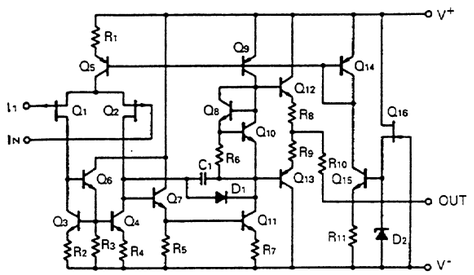

■ UPC393C 【NEC】
(Dual Comparator)

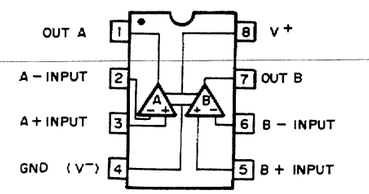

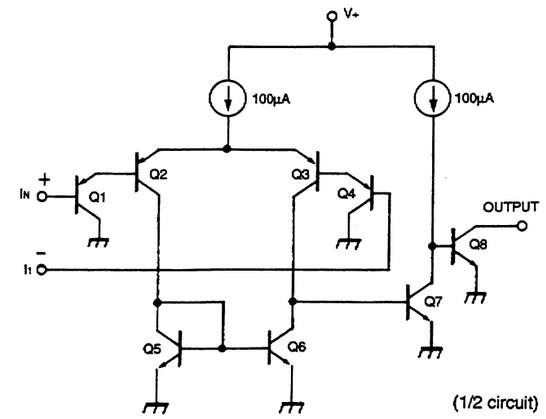

■ UPC393G2 【NEC】
(Refer to UPC393C.)

■ UPC78L05T 【NEC】
(Regulator)

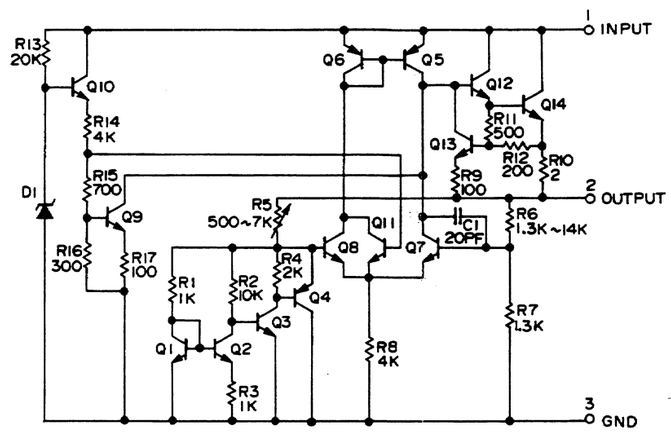

■ UPD42S4260ALG5 【NEC】
(3.3V 4M Bit Dynamic RAM)

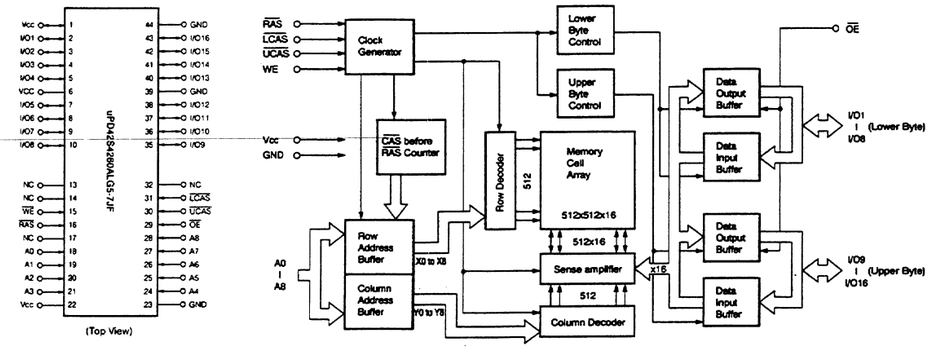

■ UPC78N12H 【NEC】
(Three Terminal Positive Voltage Regulator (+12V))

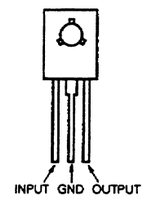

(TOP VIEW)

■ UPC79N12H 【NEC】
(Three Terminal Negative Voltage Regulator (-12V))

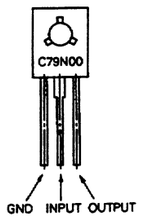

(TOP VIEW)

■ UPC78L12T 【NEC】
(3-Terminal Positive Voltage Regulator (+12V))

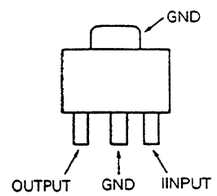

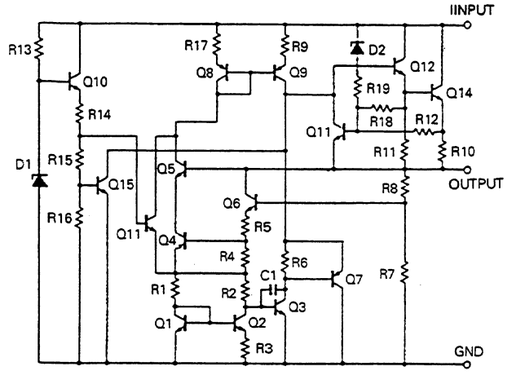

■ UPD485505G-35 【NEC】
(5K-Word x 8-bit FIFO MEMORY)

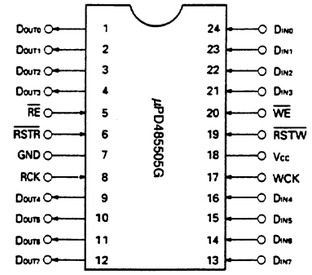

DIN0~DIN7 : Data input
DOUT0~DOUT7 : Data output
WCK : Write clock input
RCK : Read clock input
$\overline{WE}$: Write enable input
$\overline{RE}$: Read enable input
$\overline{RSTW}$: Reset write input
$\overline{RSTR}$: Reset read input

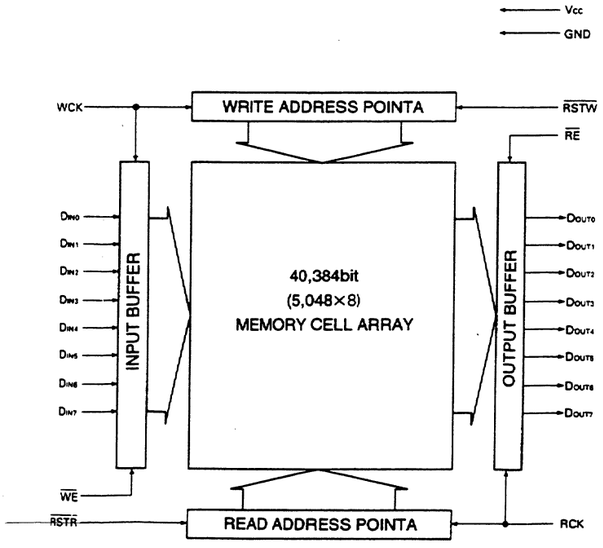

IC-27

■ UPD489001GC 【NEC】
(5M Bit Field Buffer)

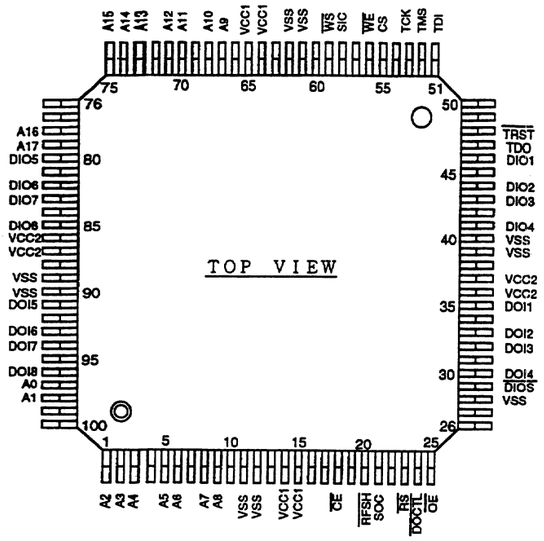

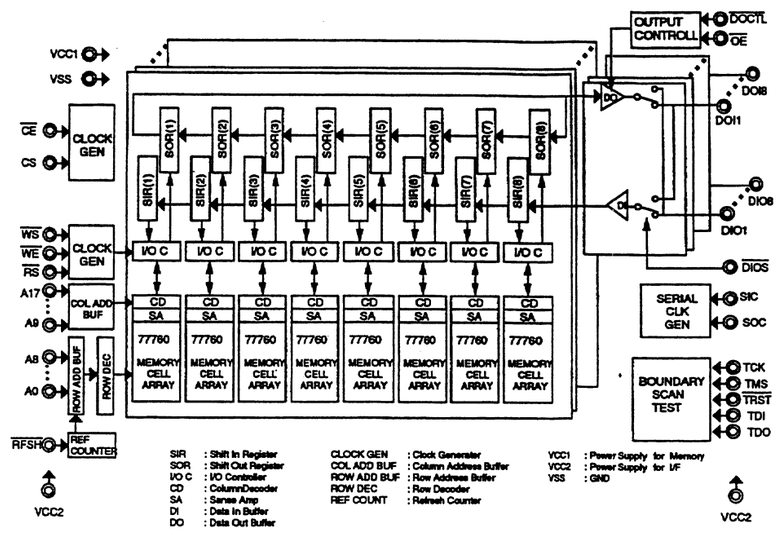

■ UPD6454GT-101 【NEC】
(Caractor Generator)

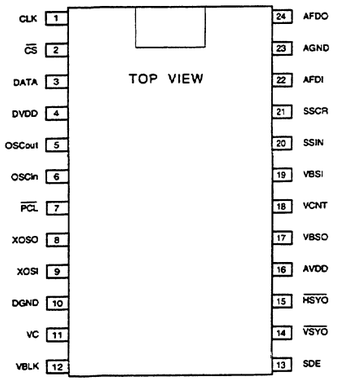

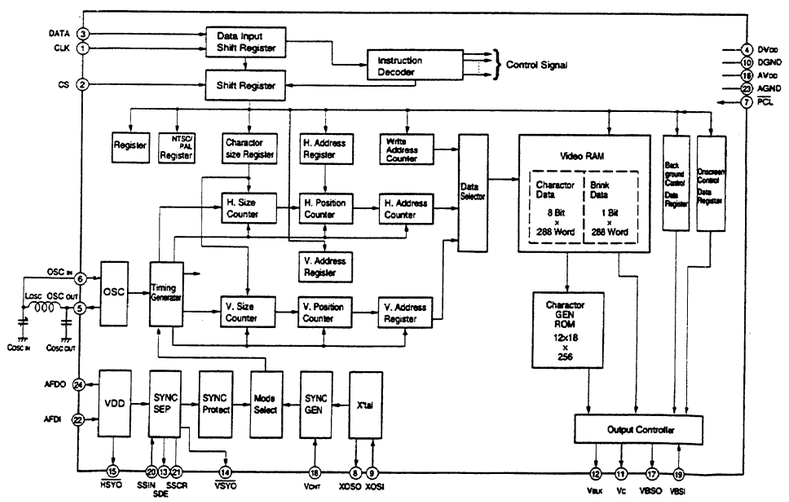

■ UPD6383GF 【NEC】
(Audio Digital Analog Processor)

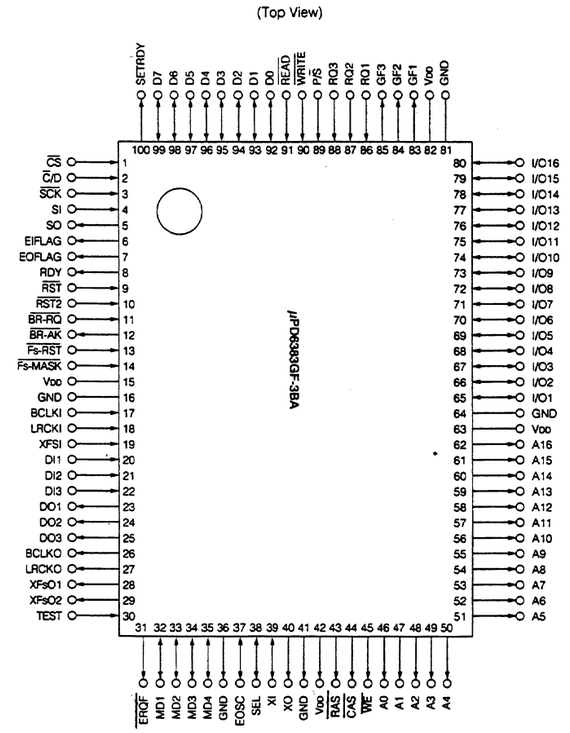

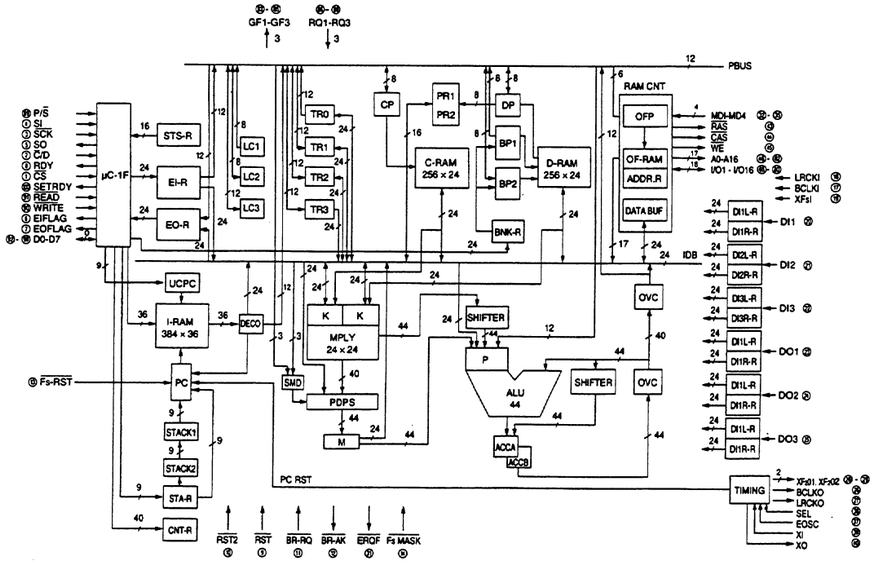

IC-28

■ UPD71055GB 【NEC】
(Parallel Input/Output Port)

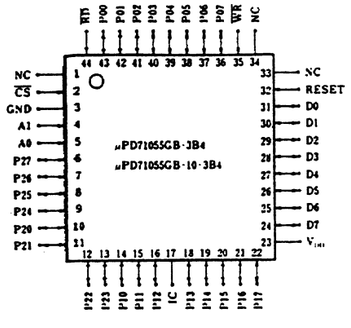

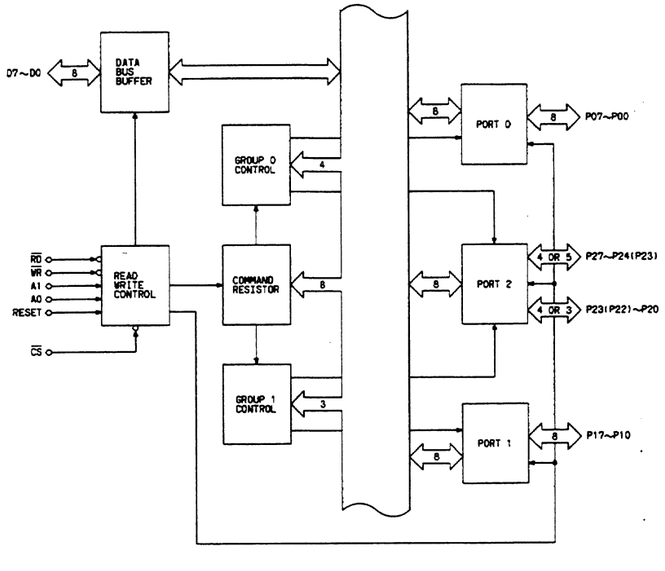

■ XRA7765AS 【ROHM】
(Normal Audio Signal Processor)

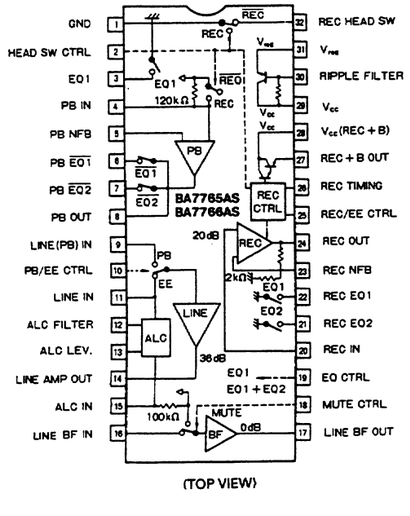

■ UPD784021GC 【NEC】
(16 Bit Microcomputer)

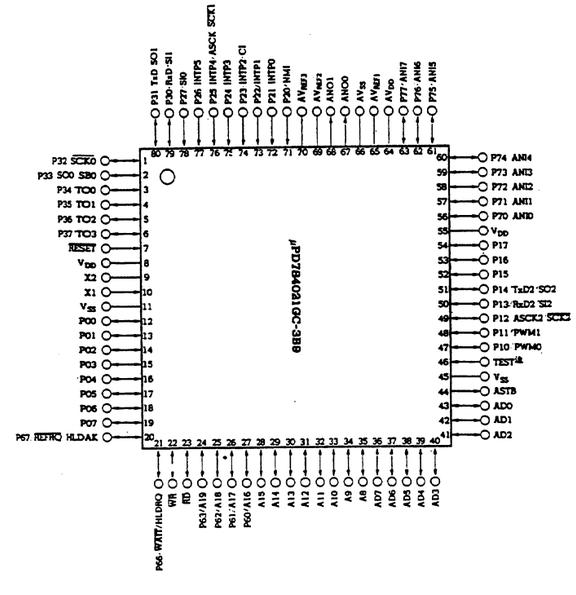

■ UPD78P054GC-101 【NEC】
(8 Bit Single Chip Microcomputer)

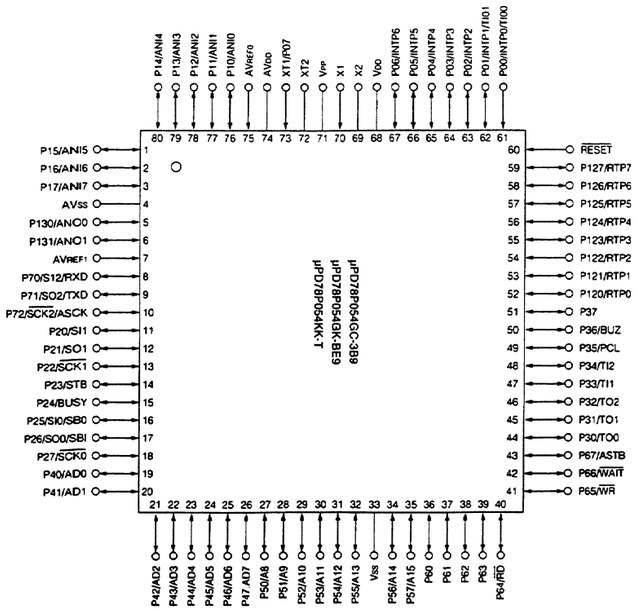

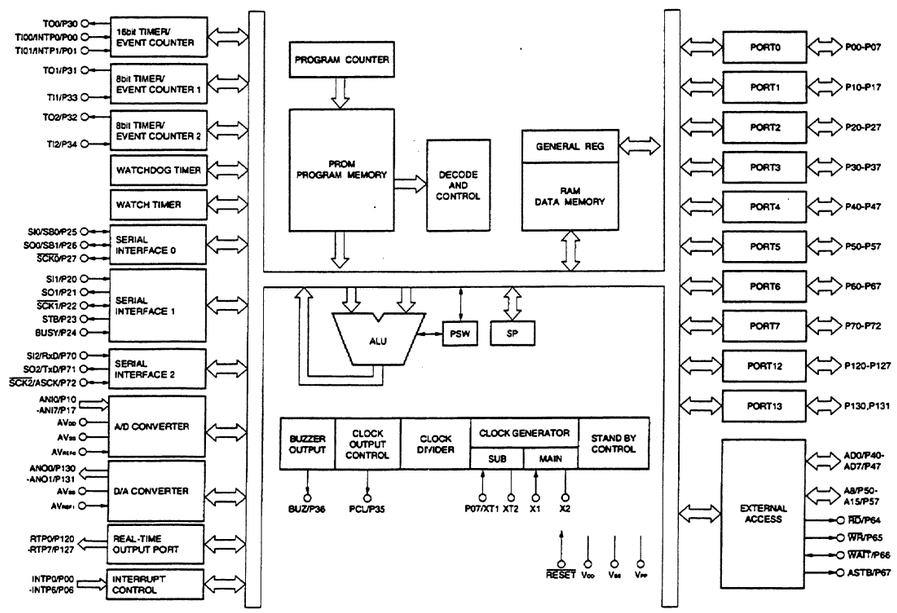

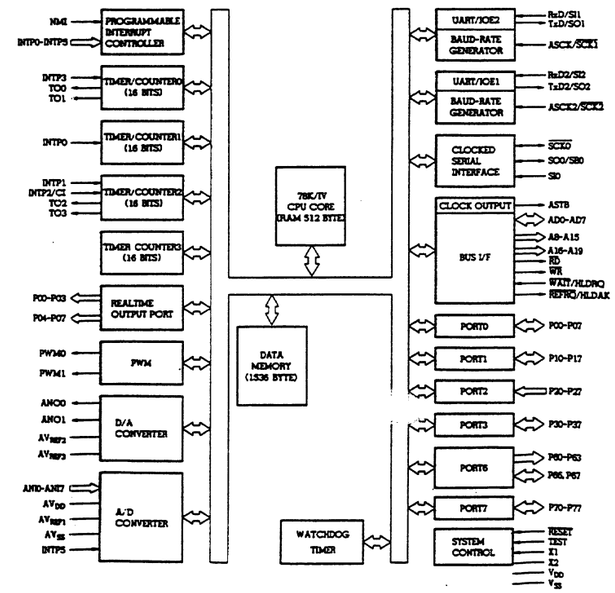

■ UPD78P054GC-201 【NEC】
(Refer to UPD78P054GC-101.)

■ UPD78P054GC-301 【NEC】
(Refer to UPD78P054GC-101.)

■ UPD78P58YGC-001 【NEC】
(Refer to UPD78P054GC-101.)

■ UPD78P58YGC-101 【NEC】
(Refer to UPD78P054GC-101.)

■ UPD78P58YGC-301 【NEC】
(Refer to UPD78P054GC-101.)

IC-29

■ UPD78P148GF-201 【NEC】
(8 Bit Signal chip Microcomputer)

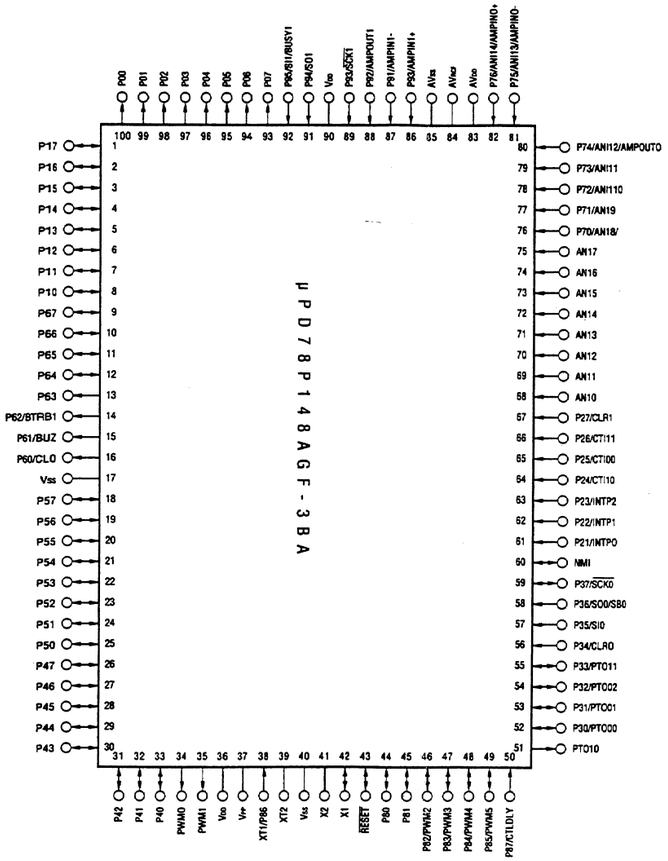

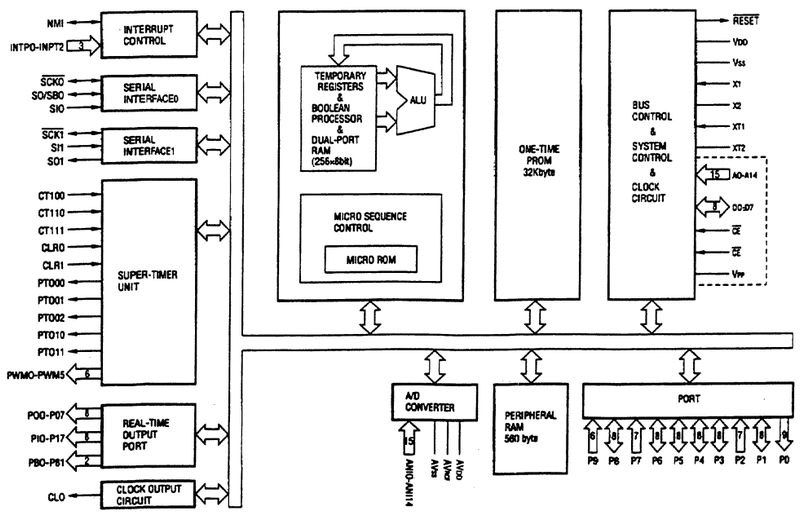

■ VC2067A 【JVC】
(Time Code Controller)

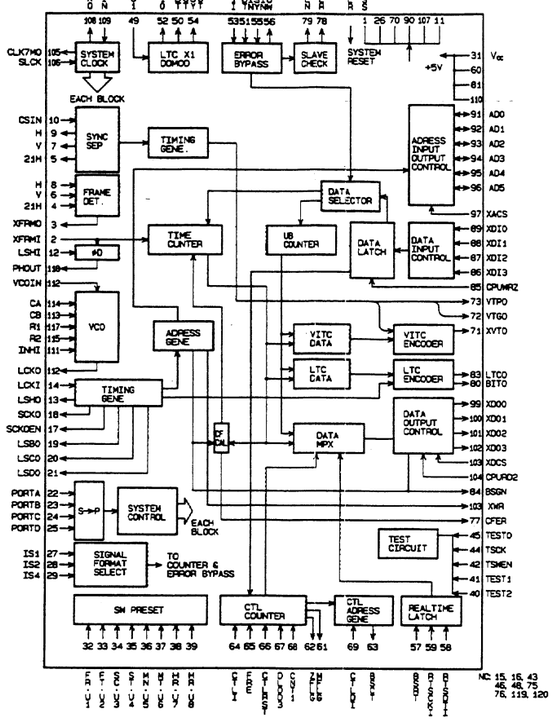

■ 74ACT241SJ 【NATIONAL SEMICONDUCTOR】
(Octal Buffer/Line Driver with TRI-STATE Outputs)

Pin Assignment
for DIP, Flaipak and SOIC

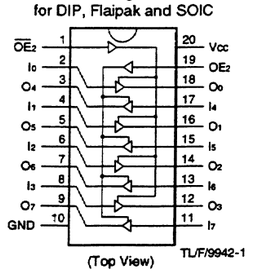

Truth Tables

Inputs		Outputs (Plins 12, 14, 16, 18)
$\overline{OE}_1$	In	
L	L	L
L	H	H
H	X	Z

Inputs		Outputs (Plins 3, 5, 7, 9)
OE_2	In	
H	L	L
H	H	H
L	X	Z

H = HIGH Voltage Level
L = LOW Voltage Level
X = Immaterial
Z = High Impedance

■ 74F74SJ 【TOSHIBA】
(Refer to MC74HC74AF.)

■ 74AC86SJ 【NATIONAL SEMI CONDUCTOR】
(Refer to TC74HC86AF.)

■ VC2080 【JVC】
(Time Code (VITC) Reader)

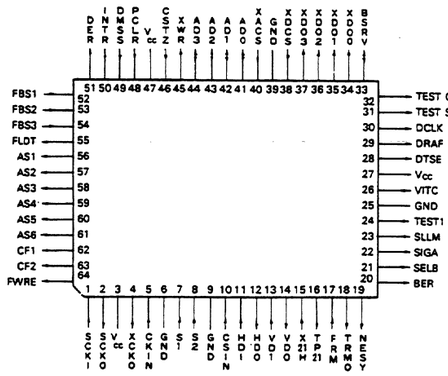

PIN NO.	IN/OUT	PIN NAME	DESCRIPTION
1. CLOCK SIGNAL			
5	I	CKIN	SYSTEM CLOCK IN
4	O	XCKO	CLOCK OUT
2	O	SCKO	SYSTEM CLOCK OUT
1	I	SCKI	SYSTEM CLOCK IN
2. VITC SIGNAL			
26	I	VITC	VITC SIGNAL IN
23	I	SLLM	READ SIZE SELECT IN
30	O	DCLK	VITC READ CLOCK OUT
29	O	DRAF	VITC SYNCHRONISE SIGNAL D OUT
28	O	DTSE	VITC DATA SEARCH FLAG OUT
22	O	SIGA	SIGNAL VITC AREA OUT
3. SYNC. SIGNAL			
10	I	CSIN	C-SYNC IN
14	O	VDO	VERTICAL SYNC DRIVE OUT
13	I	VDI	VERTICAL SYNC DRIVE IN
12	O	HDO	HORIZONTAL SYNC DRIVE OUT
11	I	HDI	HORIZONTAL SYNC DRIVE IN
16	O	OTP21	OUTPUT TP21
15	I	ITP21	INPUT TP21
18	O	XFRM0	FRAME SIGNAL OUT
17	I	XFRMI	FRAME SIGNAL IN
19	O	NESY	LOST-SYNC FLAG OUT

4. SYSTEM CONTROL SIGNAL			
48	I	PCLR	POWER ON CLEAR
7	I	S1	SIGNAL FORMAT SELECT S1
8	I	S2	SIGNAL FORMAT SELECT S2

S1	S2	SIGNAL NAME	SYSTEM
H	H	NTSC DROP FRAME	525/60
L	H	NTSC NON DROP FRAME	525/60
L	L	PAL/SECAM	625/50

Selection in which S1,S2,and S4 are other than the above is not defined.

5. DATA I/O SIGNAL			
41	I/O	AD0	ADRESS DATA IN/OUT
42	I/O	AD1	
43	I/O	AD2	
44	I/O	AD3	
40	I	XACS	ADRESS LINE ENABLE IN
34	O	XDO0	DATA OUT
35	O	XDO1	
36	O	XDO2	
37	O	XDO3	
38	I	XDCS	DATA LINE ENABLE IN
45	O	XWR	WRITE SIGNAL OUT (NEGATIVE-LOGIC)
46	I	CPURDZ	CPU READ SIGNAL IN (NEGATIVE-LOGIC)
49	I	DMSS	ASSIGNED DATA SELECT IN
33	O	BSRV	BUSY READER VITC
31	O	DER	DEMODURATED DATA ERROR
58	O	FT4	ASSIGNED BIT PARALLEL DATA OUT
57	O	FT5	
56	O	ST8	
59	O	MT3	
60	O	MT4	
61	O	MT5	
50	I	INTR	INTERRUPT REQUEST
62	O	CF1	DEMODULATED COLOR FRAME OUTPUT
63	O	CF2	
21	I	SELB	BIT ERROR AREA SELECT
20	O	BER	BIT ERROR
6. OTHERS			
24	I	TEST1	
32	I	TEST CRCC	
31	I	TEST SYNC	
3	I	VDD	+5V IN
27	I		
47	I		
6	I	VSS	GND
9	I		
25	I		
39	I		
52	I	FBS1	FIELD MARK POSITION SELECT1
53	I	FBS2	FIELD MARK POSITION SELECT2
54	I	FBS3	FIELD MARK POSITION SELECT3
55	O	FLDT	FIELD DATA OUT
64	O	FWRE	TAPE DIRECTION SIGNAL OUT (OD)

■ 74AC175SJ 【NATIONAL SEMI CONDUCTOR】
(Quad D-Type Flip-Flop With Complementary Outputs Common Clock and Reset)

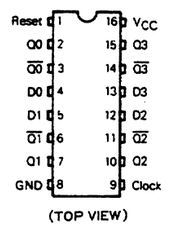

TRUE Table

Inputs			Outputs	
Reset	Clock	D	Q	$\overline{Q}$
L	X	X	L	H
H	⌐⌐	H	H	L
H	⌐⌐	L	L	H
H	L	X	no change	

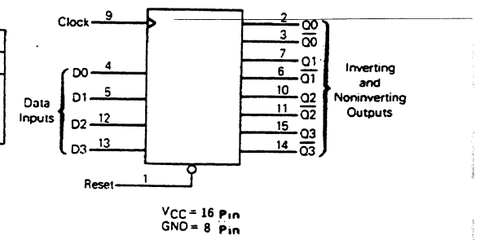

■ 74ACT574SJ 【NATIONAL SEMICONDUCTOR】
(Octal D-Type EDGE-Trigger Flip-Flop With NON Inverted 3-State Outputs)

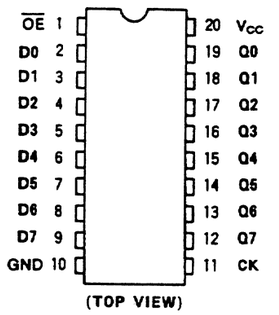

TRUE Table

INPUTS			OUTPUTS	
$\overline{OE}$	CK	D	Q(T574A)	$\overline{Q}$(T564A)
H	X	X	Z	Z
L	⌐⌐	X	Q_n	$\overline{Q_n}$
L	⌐⌐	L	L	H
L	⌐⌐	H	H	L

X : Don't Care
Z : High Impedance
No change

IC-30

SECTION 5

EXPLODED VIEWS AND PARTS LIST

Table of contents

5.1 CABINET ASSEMBLY 5-2
5.2 CHASSIS ASSEMBLY 5-4
5.3 FRAME ASSEMBLY 5-7
5.4 REAR FRAME ASSEMBLY 5-8
5.5 MECHANISM-1 ASSEMBLY 5-10
5.6 MECHANISM-2 ASSEMBLY 5-12
5.7 CASSETTE HOUSING ASSEMBLY 5-14

SECTION 5
EXPLODED VIEW AND ASSEMBLY LIST

- **SAFETY PRECAUTION**
  Parts identified by the ⚠ symbol are critical for safety.
  Replace only with specified parts numbers.
- **NOTE**
  Parts not denoted by parts numbers are not supplied by JVC.

5.1 CABINET ASSEMBLY M 2

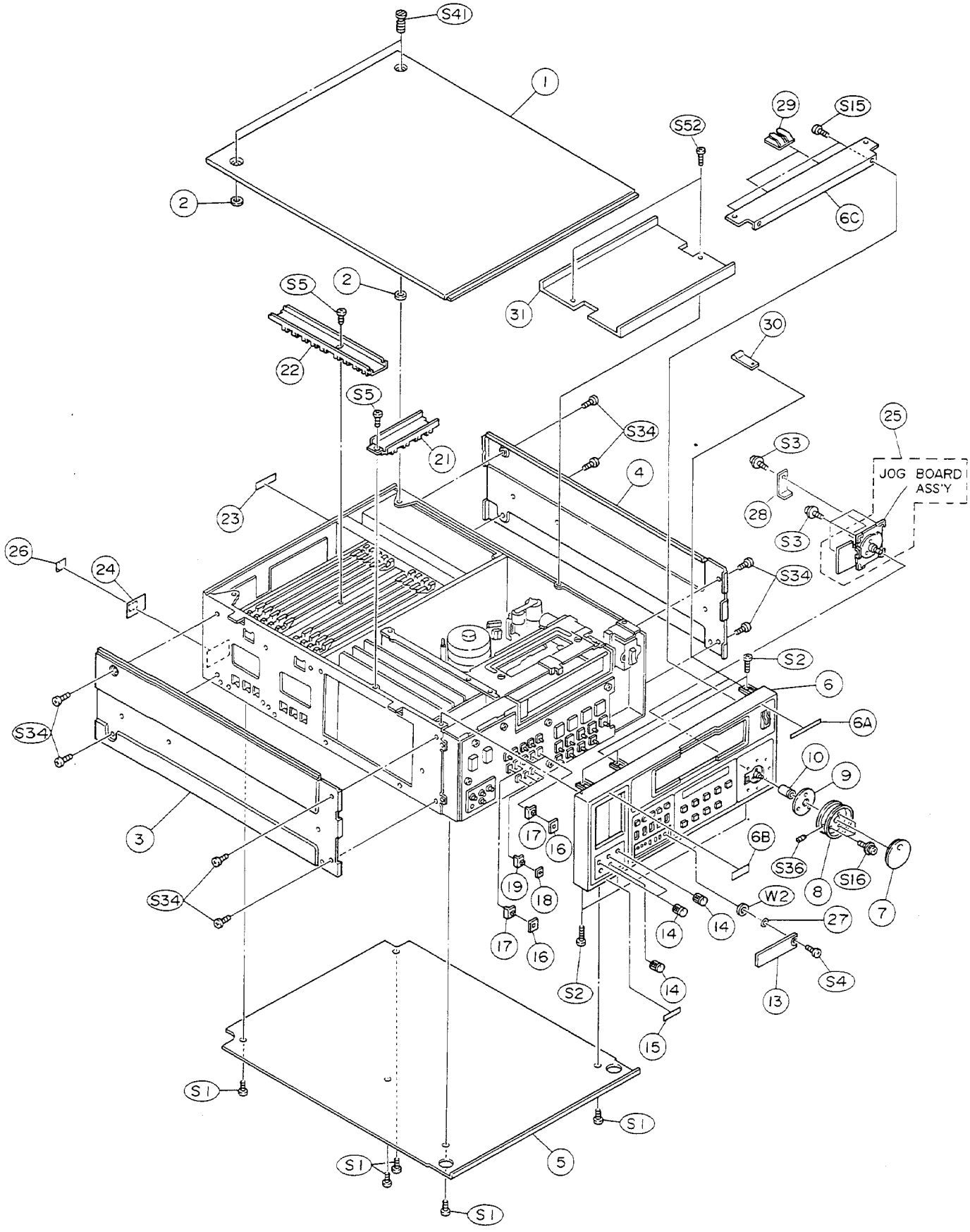

● CABINET ASSEMBLY LIST M2

M2MM□□□□

Symbol No.	Part No.	Part Name	Description
1	PRD10231-04	TOP COVER	
2	PGD40255	SPACER	X2
3	PRD10233-02	SIDE COVER	LEFT
4	PRD10234-02	SIDE COVER	RIGHT
5	PRD10337-01-03	BOTTOM COVER	
6	PRD10335F-04	FRONT PANEL ASS'Y	INCL. S15
6A	PRD30095-21	PLATE	
6B	PQM30022-5	MARK	
6C	PRD31074-01-02	STAY	
6D	PRD31066-01-01	BUTTON	X2, STANBY, SEARCH
6E	PRD31066-02-01	BUTTON	PAUSE/STILL
6F	PRD31066-03-01	BUTTON	FF
6G	PRD31066-04-01	BUTTON	PLAY
6H	PRD31066-05-01	BUTTON	STOP
6J	PRD31066-06-01	BUTTON	REC
6K	PRD31066-07-01	BUTTON	REW
6L	PRD31066-08-01	BUTTON	EJECT
6M	PRD31067-01-01	BUTTON	COUNTER RESET
6N	PRD30704-10	BUTTON	X4, SET, SELECT, FINE, TRACKING
6P	PRD30704-12	BUTTON	MENU
7	PRD41819A-02	JOG KNOB ASS'Y	INCL.S36
8	PRD31052A-06	SEARCH KNOB ASS'Y	
9	PRD44134	SPACER	
10	PRD30026-47	COLLAR	
13	PRD31080-01-01	DOOR	
14	PRD31082-01-03	KNOB	X4
15	PQ40111-1-5	SERIAL NO PLATE	
16	PRD43146	PLATE	X5
17	PRD42830	SLIDE SWITCH KNOB	X5
18	PRD43146-02	KNOB PLATE	
19	PRD44020	SLIDE SWITCH KNOB	
21	PRD31057	HOLDER(S)	
22	PRD31058	HOLDER(L)	
23	PRD42578-03	REAR LABEL	
24	PRD30086-18-22	RATING LABEL	
25	PGS21115A	SEARCH/JOG BOARD ASS'Y	
26	PRD44131	MASKING SHEET	
27	Q03093-826	POLI SLIDER	
28	PRD44857	EARTH	
29	PGZ02449	S. FINGER	X2
30	PRD44858	EARTH	X2
31	PRD31231	COVER	
S1	SDST3008Z	SCREW	M3×8,X5
S2	SDSP3006M	SCREW	M3×6,X6
S3	DPSP3016Z	SCREW	M3×16,X4
S4	SDSP3008M	SCREW	M3×8
S5	SDSP3010Z	SCREW	M3×10,X2
S15	SDSF2606Z	SCREW	M2.6×6,X2
S16	DPSP2016Z	SCREW	M2×16,X3
S34	SXST4008N	SCREW	M4×8,X8
S36	YWS3004B	SCREW	M3×4
S41	PRD30088-03	SCREW	X2
S52	SDSP3006Z	SCREW	X2
W2	PQM30017-6	SLIT WASHER	

5.2 CHASSIS ASSEMBLY M 3

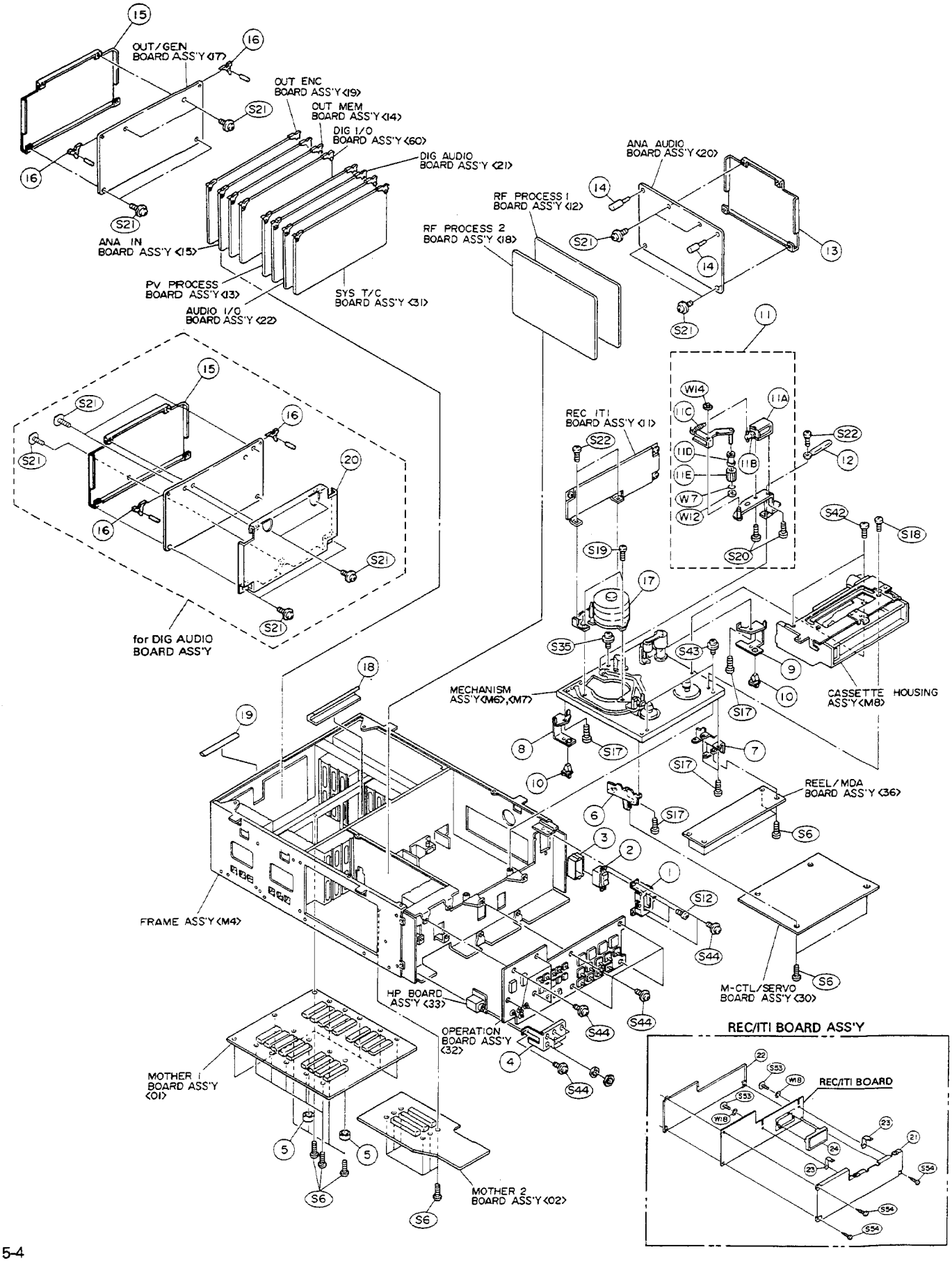

● CHASSIS ASSEMBLY LIST M3

M3MM□□□□

Symbol No.	Part No.	Part Name	Description
1	PRD44361	BRACKET	POWER SWITCH
2	PGZ00479	SEESAW SWITCH	POWER SWITCH
3	PRD42023	SWITCH COVER	
4	PRD31065	BRACKET	
5	PGD40255	SPACER	X2
6	PRD44425-01-01	PWB BRACKET	SUPPLY REEL DISC
7	PRD44424-01-01	PWB BRACKET	TAKE UP REEL DISC
8	PRD44427	PWB BRACKET	DRUM ASS'Y
9	PRD44426	PWB BRACKET	PINCH ROLLER
10	PGZ00606-03	PWB HOLDER	X2
11	PRD30797B	HEAD CLERNER ASS'Y	INCL.S20,W7,W12,W14
11A	PGZ01973	SOLENOID ASS'Y	
11B	PRD30023-36	COMPRESSION SPRING	
11C	PRD30024-62	TENSION SPRING	
11D	PQ45689	CLEANER HOLDER	
11E	PQ44837	HEAD CLEANER	
12	PU49485-4	WIRE CLAMP	
13	PRD20531	SHIELD CASE	X3
14	PGZ01128-02	SPACER	X6
15	PRD20530	SHIELD CASE	X8
16	PGZ00582	EJECTOR	X18
17	PDR2007A	DRUM ASS'Y	
18	PGZ02450	GASKET	
19	PGZ02451	GASKET	
20	PRD20579	SHIELD CASE	
21	PRD31203	SHIELD COVER A	
22	PRD31204-01-01	SHIELD COVER B	
23	PRD44235	BOARD BRACKET	X2
24	PRD44787	SHIELD	
S6	SBST3006Z	SCREW	M3×6,X29
S12	LPSP3006Z	SCREW	M3×6,X2
S17	SDST2605Z	SCREW	M2.6×5,X6
S18	SDSP2608Z	SCREW	M2.6×8
S19	LPSP2612Z	SCREW	M2.6×12,X3
S20	SPSP2003Z	SCREW	M2×3,X2
S21	DPSP2606Z	SCREW	M2.6×6,X77
S22	LPSP2606Z	SCREW	M2.6×6, X3
S35	LPSP4016Z	SCREW	M4×16
S42	PRD30027-04	SCREW	X2
S43	PRD30082-02	FLANGE SCREW	X2
S44	PRD30082	SCREW	X11
S53	DPSP2608Z	SCREW	X2
S54	SDSP2606Z	SCREW	X3
W7	Q03093-829	PLASTIC WASHER	
W12	PQM30017-25	SLIT WASHER	
W14	REE2500	E WASHER	
W18	WBS2600N	LOCK WASHER	X2

● **FRAME ASSEMBLY LIST** [M][4]

[M][4][M][M]

Symbol No.	Part No.	Part Name	Description
1	PRD10327-01-01	FRONT FRAME	
2	PRD10334-01-02	FRAME	MOTHER 2
3	PRD10330-01-02	CENTER FRAME	
4	PRD10331-01-02	REAR FRAME	
5	PRD10328-01-01	SIDE FRAME	LEFT
6	PRD10329-01-01	SIDE FRAME	RIGHT
7	PRD10333-01-02	FRAME	SW REG.
⚠ 8	PGZ02147A	SW REG ASS'Y	
9	PGZ02212	SPACER	X3
10	PRD20546	GUIDE RAIL	
11	PRD31055A	MAIN DECK BRACKET ASS'Y	FRONT
12	PRD44359A	MAIN DECK BRACKET ASS'Y	REAR
13	PRD44740-01-02	BRACKET	SW REG.
14	PGZ00493-02	GUIDE RAIL	X2
15	PRD31059	GUIDE RAIL BRACKET	X2
16	PRD43816	FOOT	X8
17	PGZ01664	EDGE SADDLE	X2
18	PU49485-3	WIRE CLAMP	X3
19	PU54969	WIRE CLAMP	X3
20	PEME0796-03	CLAMP	X7
21	PGZ00452	SPACER	X3
22	PGZ02211	CLAMP	X2
23	PGZ02449	S. FINGER	X7
S6	SBST3006Z	SCREW	M3×6,X50
S7	SDST3006R	SCREW	M3×6,X10
S8	SBST3010Z	SCREW	M3×10,X8
S13	DPSP3006Z	SCREW	M3×6,X6

5.3 FRAME ASSEMBLY M4

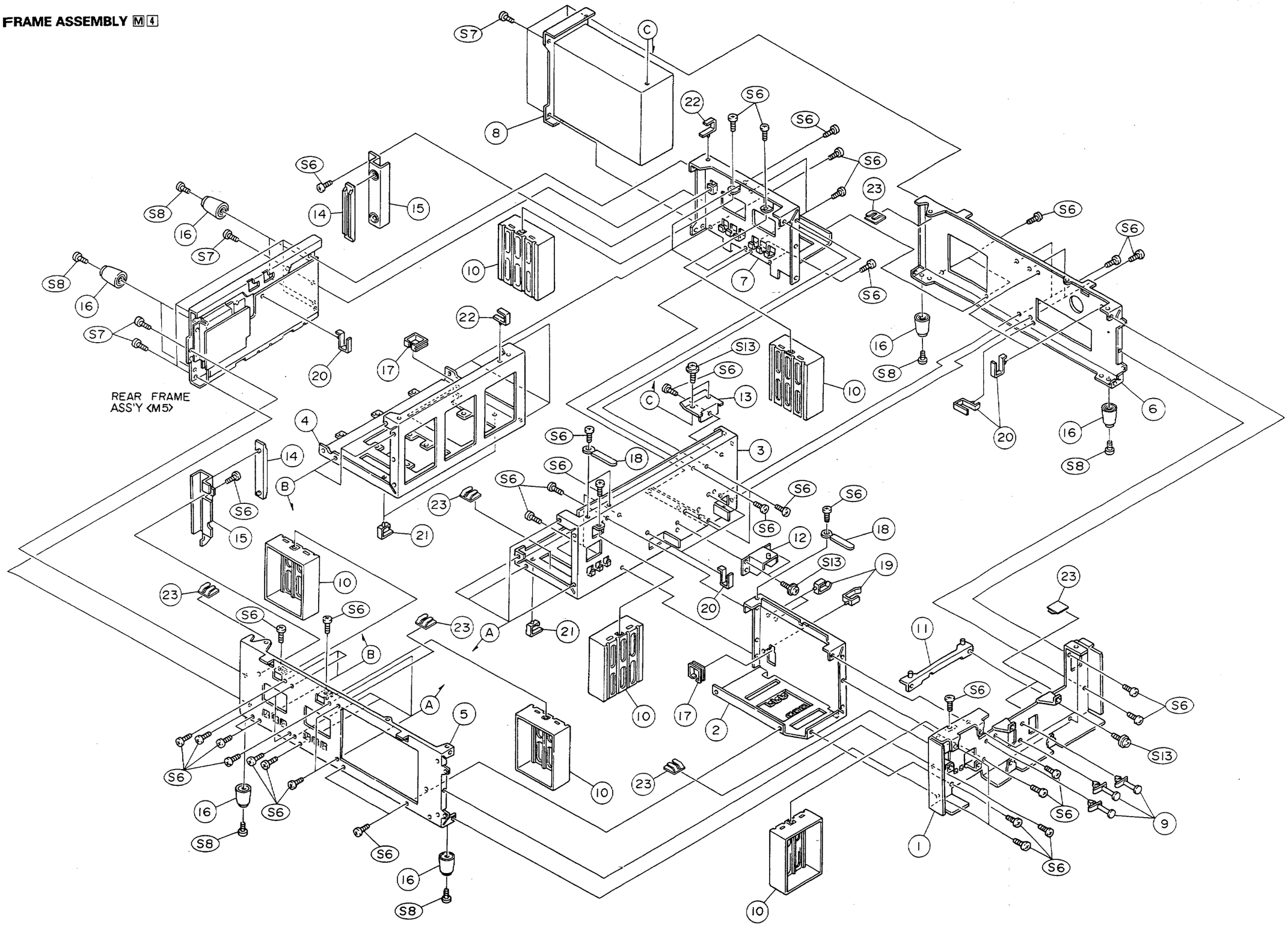

5-7

5.4 REAR FRAME ASSEMBLY M5

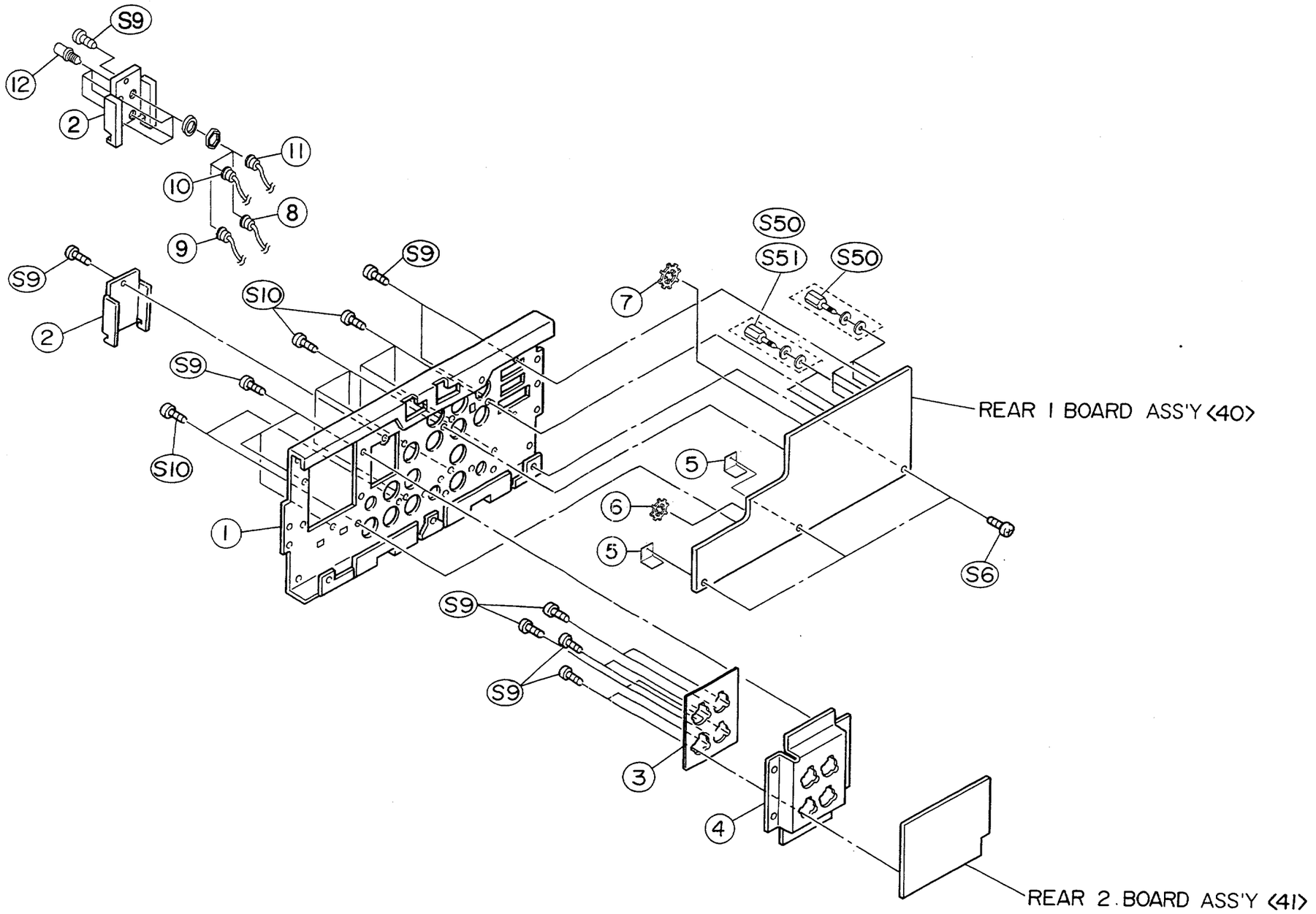

5-8

● REAR FRAME ASSEMBLY LIST [M][5]

[M][5][M][M]

Symbol No.	Part No.	Part Name	Description
1	PRD10332-02	REAR FRAME	
2	PRD31060	PANEL	
3	PRD31087-01-01	SHEET	
4	PRD31062	PANEL	
5	PRD44872	EARTH	X2
6	PRD44859	RING	X14
7	PRD44860	RING	
8	PGZ02213-03	CABLE ASSEMBLY	WHITE
9	PGZ02213-04	CABLE ASSEMBLY	ORANGE
10	PGZ02213-01	CABLE ASSEMBLY	BLUE
11	PGZ02213-02	CABLE ASSEMBLY	YELLOW
12	PGZ02214	BNC CONNECTOR	X4
S6	SBST3006Z	SCREW	M3×6,X3
S9	SDSP3006R	SCREW	M3×6, X14
S10	SDSF3010R	SCREW	M3×10, X10
S50	PGD02266	SCREW	M3×10,X6,
S51	PGD02267	SCREW	M3×10,X4,

5.5 MECHANISM-1 ASSEMBLY M 6

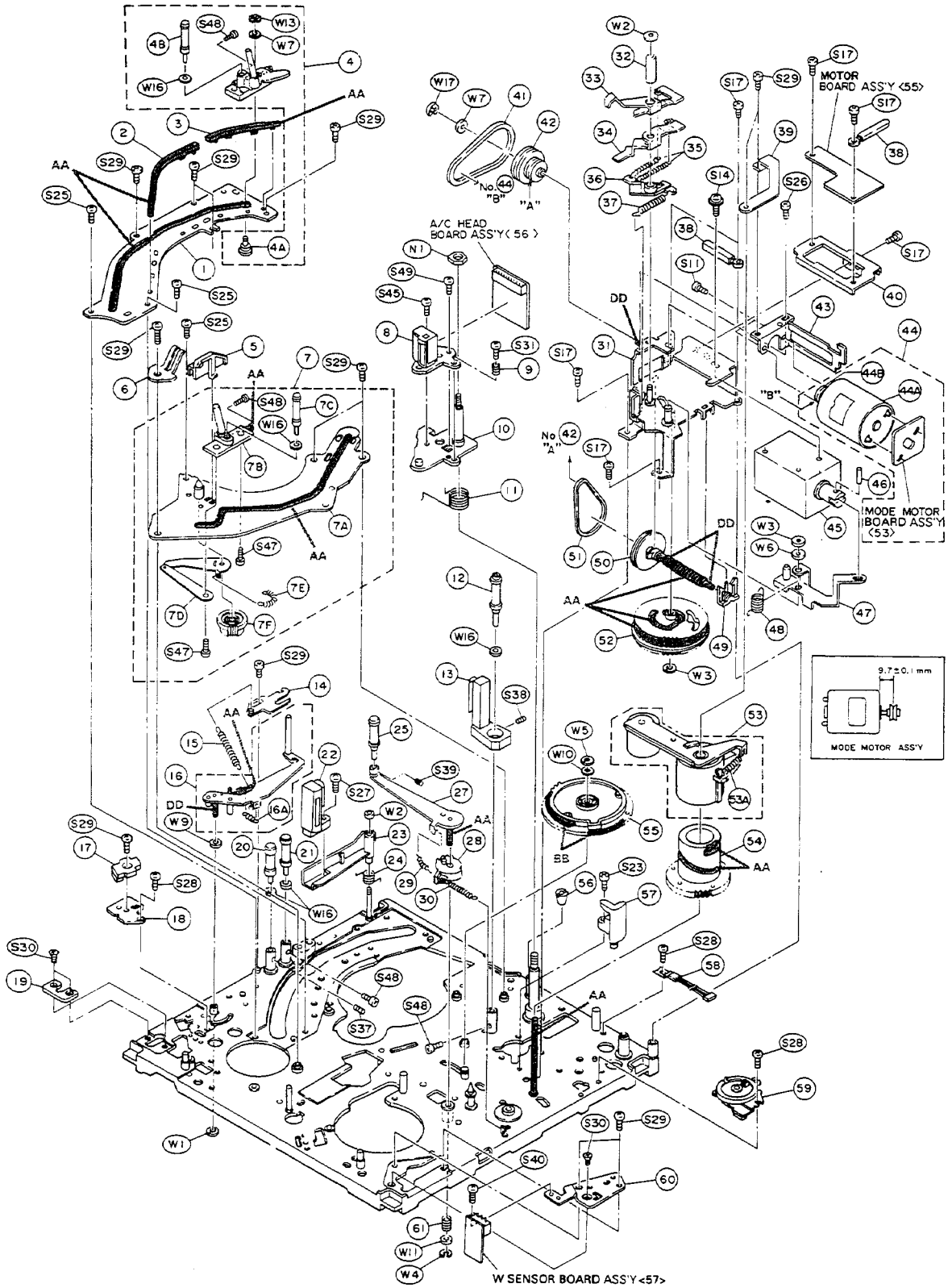

Category	JVC part number	MARK
Grease	MOS2-C	AA
	GB-TS-1	BB
Oil	COSMO-HV56	DD

NOTE: The section marked in AA,BB and DD indicate lubrication and greasing areas.
When checking or repairing this mechanism, make sure that the specified oil or grease has been applied to every point marked with AA,BB or DD

● MECHANISM ASSEMBLY LIST M6

M6MM□□□□

Symbol No.	Part No.	Part Name	Description
1	PRD30806-01-02	SUPPLY SUB DECK	
2	PRD30808	GUIDE RAIL 1	SUPPLY
3	PQ33995	GUIDE RAIL 2	SUPPLY
4	PRD31091A	SUPPLY P.BASE ASS'Y	INCL.W7,W13
4A	PRD43671-01-02	STOPPER	
4B	PRD44402A	GUIDE ROLLER ASS'Y	
5	PRD44268	TAPE GUIDE	
6	PRD44276	EARTH PLATE	
7	PRD44428A	TAKE UP LOADING ARM ASS'Y	INCL. S47, S48, W16
7A	PRD43627A-01	GUIDE RAIL	
7B	PRD31092B	TAKE UP P.BASE ASS'Y	INCL. 7C, W16, S48
7C	PRD44402A	GUIDE ROLLER ASS'Y	
7D	PQ33997	SPRING STAY	TAKE UP
7E	PQM30001-316	TENSION SPRING	
7F	PQ34033	TAKE UP LOADING GEAR	
8	PGZ01840	A/C HEAD ASS'Y	
9	PQM30002-197	SPRING	
10	PRD44127A	HEAD ARM ASS'Y	
11	PQ44119	TORSION SPRING	
12	PRD44403A	TAKE UP ROLLER ASS'Y	
13	PRD44412A-01	TAKE UP SCRAPER ASS'Y	
14	PRD43902A	SP.ADJ ASS'Y	
15	PRD43935	TENSION SPRING	
16	PRD43638A-01	TENSION ARM	
16A	PRD30024-65	TENSION SPRING	
17	PU61338	TENSION SENSOR	
18	PRD43466-01-02	BASE	
19	PRD43890	SOCKET L	
20	PRD43721A	GUIDE ROLLER	
21	PRD43721A	GUIDE ROLLER	
22	PRD44399A	FE HEAD ASS'Y	
23	PRD30817	FE HEAD ARM	
24	PRD44149	TORSION SPRING	
25	PRD43660A-02	TAKE UP GUIDE ARM	
27	PRD43658A	TAKE UP GUIDE ARM	
28	PRD44039	GEAR	
29	PRD30023-54	COMPRESSION SPRING	
30	PRD30024-67	TENSION SPRING	
31	PRD44105A	S.BRACKET	
32	PRD44108	COLLAR	
33	PRD30971-01-01	LOCK LEVER 3	
34	PRD44107	LOCK LEVER 2	
35	PQM30001-314	TENSION SPRING	X2
36	PQ33992-1-1	LOCK LEVER 1	
37	PQM30001-313	TENSION SPRING	
38	PU49485-4	WIRE CLAMP	X2
39	PRD44103	ARM	
40	PRD31029	D.TERM PWB STAY	
41	PRD30022-18	LOADING BELT	MODE MOTOR
42	PRD43968	PULLEY	
43	PRD30969	MOTOR BRACKET	
44	PRD44123A	MODE MOTOR ASS'Y	
44A	PU60628-3-2	MODE MOTOR	
44B	PQ43546-1-2	MOTOR PULLEY	
45	PGZ01845	SOLENOID ASS'Y	

Symbol No.	Part No.	Part Name	Description
46	PSE3010	SPRING PIN	
47	PRD44106A	S.LEVER ASS'Y	
48	PRD44113	TORSION SPRING	
49	PQ44129	WORM BEARING 2	
50	PRD44122A	WORM GEAR	
51	PRD30022-17	LOADING BELT	WORM GEAR
52	PQ21313-1-1	CAM GEAR	
53	PRD43387A-01	PINCH ROLLER ARM ASS'Y	
53	OR	PRD43387B-01	PINCH ROLLER ARM ASS'Y
53A	PRD30024-60	TENSION SPRING	
54	PQ21312	P.ROLLER CAM	
55	PQ21315-1-2	CONTROL CAM	
56	PRD44861	TAPER NUT	
57	PRD44121-01-01	ARM GUIDE	
58	PU61357	DEW SENSOR	INCL. S47, S48, W16
59	PU61339-1-1	ROTARY ENCORDER	INCL. 7C, W16, S48
60	PRD44379	SOCKET R	
61	PRD30023-55	COMPRESSION SPRING	
S11	SPSP3003Z	SCREW	M3×3,X2
S14	DPSP3005Z	SCREW	M3×5,X2
S17	SDST2605Z	SCREW	M2.6×5,X7
S23	SDST2606Z	SCREW	M2.6×6
S25	SDSP2603.5M	SCREW	M2.6×3,X3
S26	SDSP2604Z	SCREW	M2.6×4
S27	SDSF2608M	SCREW	M2.6×8
S28	SDSP2004Z	SCREW	M2×3,X3
S29	SDSP2605Z	SCREW	M2.6×5,X11
S30	SSSP2606Z	SCREW	M2.6×6,X3
S31	SDSP2612Z	SCREW	M2.6×12
S38	YFS2605B	SCREW	
S39	YFS2003B	SCREW	M2×3
S40	SPSH1740M	SCREW	M2.6×6
S47	PRD43819-02	SCREW	M2.6×4.5,X2
S48	PQ45295	SCREW	X4
S49	PQ44621	SCREW	M2.6×12
S50	PQ43687B	SCREW	M2.6×8
W1	PQM30017	WASHER	
W2	PQM30017-6	SLIT WASHER	X2
W3	PQM30017-12	SLIT WASHER	X2
W4	PQM30017-13	SLIT WASHER	
W5	PQM30017-28	SLIT WASHER	
W6	Q03093-818	WASHER	
W7	Q03093-829	PLASTIC WASHER	X2
W9	Q03093-838	PLASTIC WASHER	
W10	Q03093-849	WASHER	
W11	WSS4000Z	WASHER	
W13	REE1500	E.WASHER	
W16	PRD43925	O RING	X6
W17	REE1200	E RING	
N1	PQ40353	NYLON NUT	

5-11

5.6 MECHANISM-2 ASSEMBLY M7

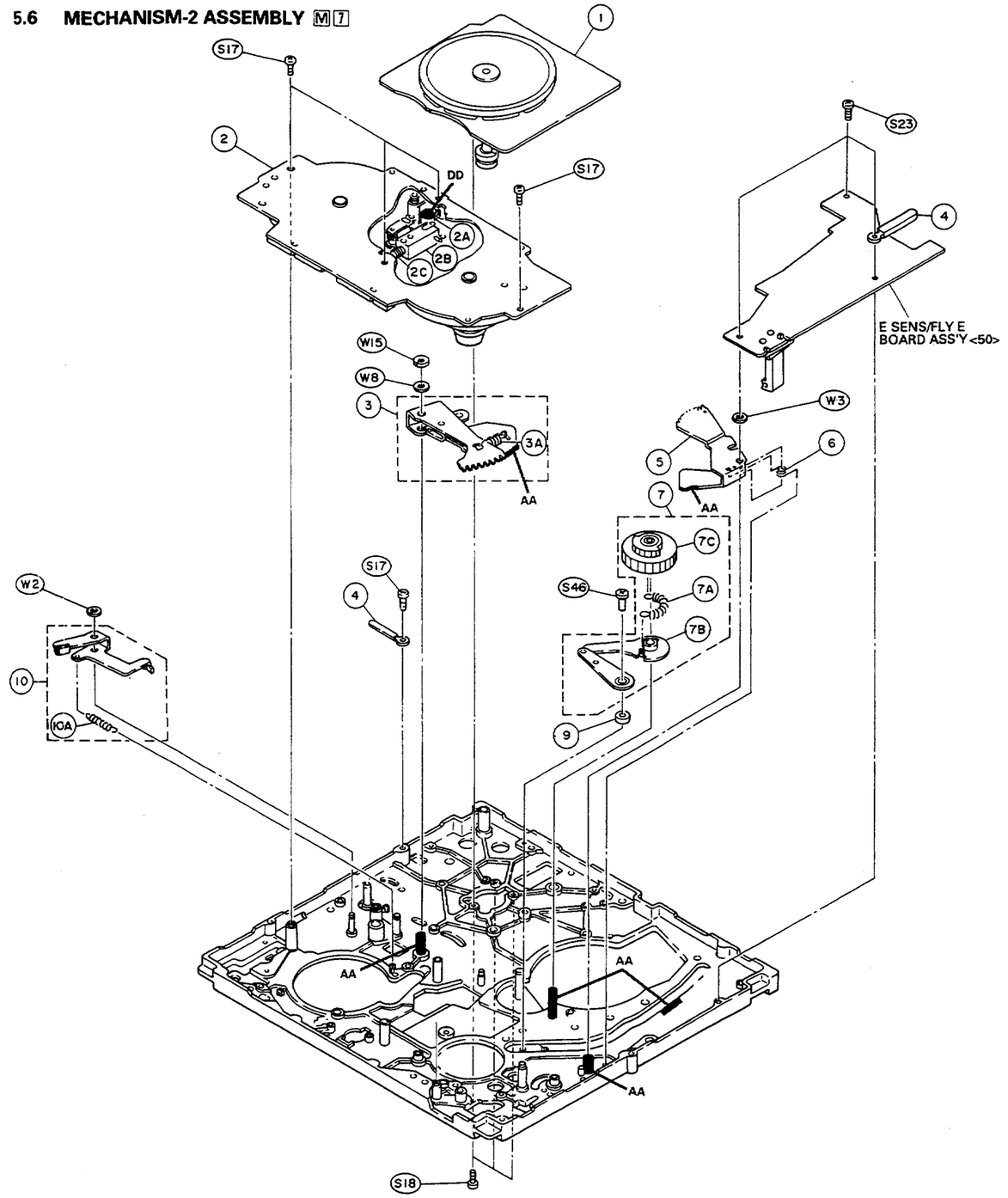

Category	JVC part number	MARK
Grease	MOS2-C	AA
Oil	COSMO-HV56	DD

NOTE: The section marked in **AA** and **DD** indicate lubrication and greasing areas.
When checking or repairing this mechanism, make sure that the specified oil or grease has been applied to every point marked with **AA** and **DD**

5-12

● MECHANISM-2 ASSEMBLY LIST M7

M7MM□□□□

Symbol No.	Part No.	Part Name	Description
1	PGZ01535-01-02	CAPSTAN MOTOR ASS'Y	
2	PGZ01958A	REEL MOTOR ASS'Y	
2A	PGZ01958-001	LED HOLDER	
2B	PGZ01958-002	SOLENOIDE	
2C	PGZ01958-003	COMPRESSION SPRING	
3	PQ45306B-3	GEAR	
3A	PQM30001-320	TENSION SPRING	
4	PU49485-4	WIRE CLAMP	X2
5	PQ34007	CANCEL LEVER	
6	PQ45313	TORSION SPRING	
7	PRD43923A	SUPPLY LOADING ARM ASS'Y	
7A	PQM30001-318	TENSION SPRING	SUPPLY
7B	PRD43620A	LOADING ARM	SUPPLY
7C	PQ34003	LOADING GEAR	SUPPLY
9	PRD44019	COLLAR	
10	PRD43479A-01	REEL BRAKE ASS'Y	
10A	PRD30024-58	TENSION SPRING	
S17	SDST2605Z	SCREW	M2.6×5,X5
S18	SDSP2608Z	SCREW	M2.6×8,X3
S23	SDST2606Z	SCREW	M2.6×6,X3
S46	PRD44287	SCREW	M2.6×4.5
W2	PQM30017-6	SLIT WASHER	
W3	PQM30017-12	SLIT WASHER	
W8	Q03093-833	PLASTIC WASHER	
W15	REE3000	E WASHER	

5-13

5.7 CASSETTE HOUSING ASSEMBLY [M][8]

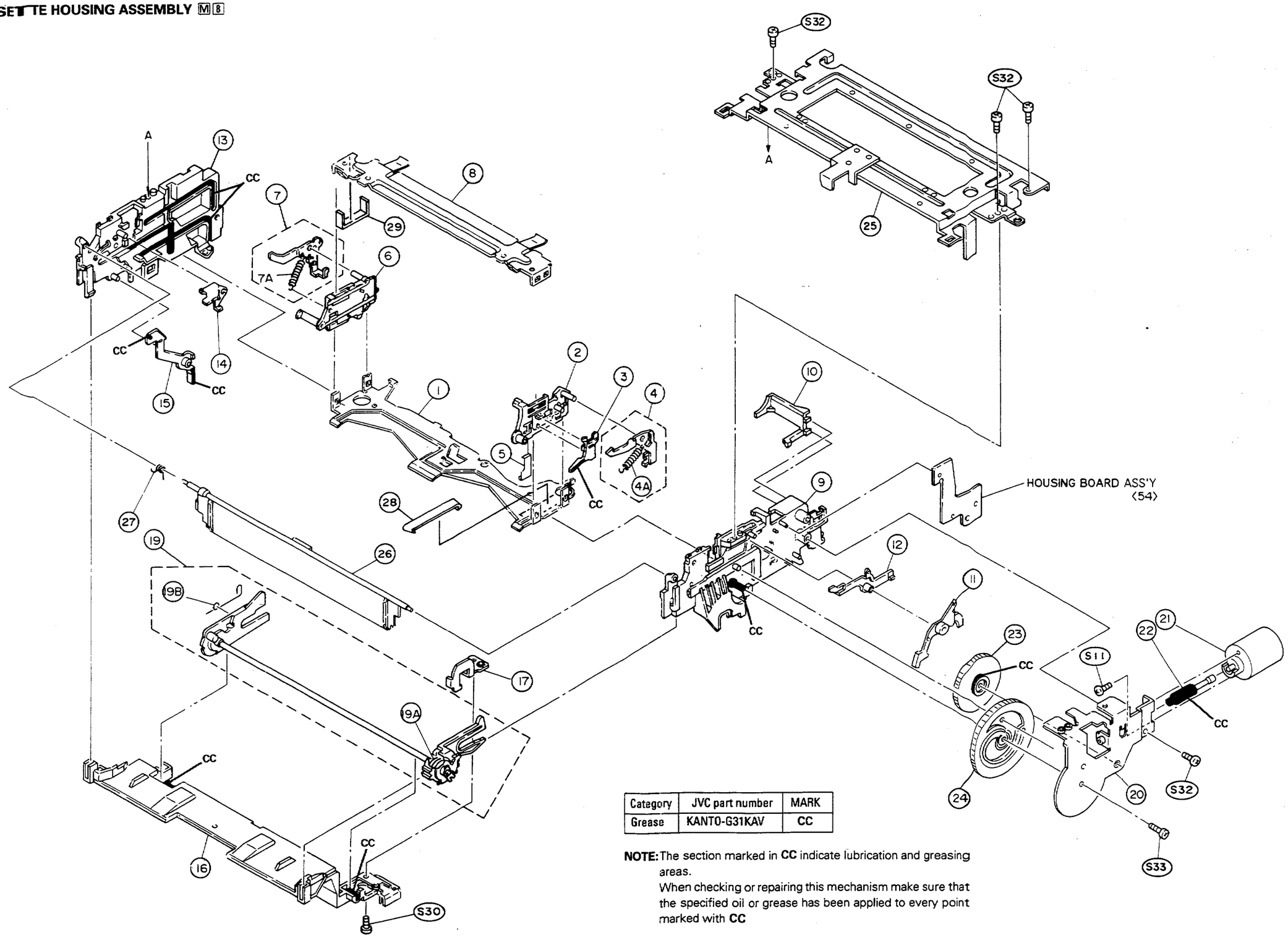

Category	JVC part number	MARK
Grease	KANTO-G31KAV	CC

NOTE: The section marked in **CC** indicate lubrication and greasing areas.
When checking or repairing this mechanism make sure that the specified oil or grease has been applied to every point marked with **CC**

5-14

● CASSETTE HOUSING ASSEMBLY LIST M8

M8MM□□□□

Symbol No.	Part No.	Part Name	Description
1	PRD20536	CASSETTE HOLDER	
2	PQ11278-01-01	SIDE HOLDER(R)	*1
3	PQ45459	LID OPENER	
4	PQ43596F	L.LEVER(R) ASS'Y	
4A	PQ43597-5	TENSION SPRING	
5	PRD44285	EARTH PLATE	
6	PQ11279	SIDE HOLDER(L)	*1
7	PQ45539A-01	LOCK LEVER(L) ASS'Y	
7A	PQ43597-2	TENSION SPRING	
8	PRD30982B	H.STAY ASS'Y	
9	PQ11281-01-06	HOUSING STAY(R)	
10	PQ34097	GUIDE	
11	PQ34098	SENSOR LEVER	
12	PRD30946	INSERT SWITCH LEVER	
13	PQ11282-01-07	HOUSING STAY(L)	
14	PQ45479-01-02	DOOR STOPPER	
15	PQ34100	DOOR OPENER	
16	PRD10301-01-02	FRONT BRACKET	
17	PRD43729	BASE BRACKET	
19	PQ34103A-04	ARM	
19A	PRD43806	TORSION SPRING	
19B	PQ43605	TORSION SPRING	
20	PRD30983A	MOTOR BRACKET ASS'Y	
21	PQ45489A	MOTOR ASS'Y	
22	PQ45474	WORM GEAR	
23	PQ34109-01-01	CONNECT GEAR	
24	PQ34110-01-01	CAM	
25	PRD30981A	TOP FRAME ASS'Y	
26	PRD30962-02-06	CASSETTE HOUSING DOOR	
27	PRD44088	TORSION SPRING	
28	PRD30030-144	PAD	
29	PRD44319	SHEET	
S11	SPSP3003ZY	SCREW	M3×3,X2
S30	SSSP2606ZY	SCREW	M2.6×6
S32	SDSF2608Z	SCREW	M2.6×8,X4
S33	SDSF2612Z	SCREW	M2.6×12

*1: When this part is removed, the holders of No. 2 and No. 6 may possibly damaged during the removing work. When the holder of No. 1 or the stay of No. 8 is replaced, make sure to replace the holders of No. 2 and No. 6 with new ones at the same time by way of precaution.

SECTION 6

ELECTRICAL PARTS LIST

Table of contents

6.1 MOTHER-1 BOARD ASSEMBLY LIST 6-2
6.2 MOTHER-2 BOARD ASSEMBLY LIST 6-2
6.3 REC/ITI BOARD ASSEMBLY LIST 6-3
6.4 RF PROCESS1 BOARD ASSEMBLY LIST 6-7
6.5 PV PROCESS BOARD ASSEMBLY LIST 6-13
6.6 OUT MEM BOARD ASSEMBLY LIST 6-18
6.7 ANA IN BOARD ASSEMBLY LIST 6-22
6.8 OUT/GEN BOARD ASSEMBLY LIST 6-32
6.9 RF PROCESS2 BOARD ASSEMBLY LIST 6-40
6.10 OUT ENC BOARD ASSEMBLY LIST 6-46
6.11 ANA AUDIO BOARD ASSEMBLY LIST 6-52
6.12 DIG AUDIO BOARD ASSEMBLY LIST 6-55
6.13 AUDIO I/O BOARD ASSEMLBY LIST 6-61
6.14 MCTL/SV BOARD ASSEMBLY LIST 6-64
6.15 SYS/TC BOARD ASSEMBLY LIST 6-70
6.16 OPERATION BOARD ASSEMBLY LIST 6-74
6.17 HP BOARD ASSEMBLY LIST 6-77
6.18 REEL MDA BOARD ASSEMBLY LIST 6-78
6.19 REAR1 BOARD ASSEMBLY LIST 6-79
6.20 REAR2 BOARD ASSEMBLY LIST 6-80
6.21 ESENS/FLYE BOARD ASSEMBLY LIST 6-81
6.22 MOTHER TERMINAL BOARD ASSEMBLY LIST 6-82
6.23 CASSETTE HOUSING BOARD ASSEMBLY LIST 6-82
6.24 MECHA TRM BOARD FASSEMBLY LIST 6-82
6.25 A/C HEAD BOARD ASSEMBLY LIST 6-82
6.26 W SENSOR BOARD ASSEMBLY LIST 6-82
6.27 DIG I/O BOARD ASSEMBLY LIST 6-83

SECTION 6
ELECTRICAL PARTS LIST

SAFETY PRECAUTION:
Parts identified by the ⚠ symbol are critical for safety. Replace only with specified parts numbers.
For maximum reliability and performance, all other replacement parts should be identical to those specified.

NOTE:
- Parts not denoted by parts numbers are not supplied by JVC.
- Abbreviations in this list are as follows:

RESISTORS

In the "Description" column:
All resistance values are in ohms (Ω).
K expresses kilo-ohm (1,000 ohms, kΩ).
M expresses mega-ohm (10^6 ohms, MΩ).

In the "Parts Name" column:

COMP. RESISTOR	:	Composition Resistor
U.F. RESISTOR	:	Non-inflammable Resistor
O.M.F. RESISTOR	:	Oxide Metalized Film Resistor
FUSI. RESISTOR	:	Fusible Resistor
M.P. RESISTOR	:	Metal Plate Resistor
M.G. RESISTOR	:	Metal Graze Resistor
M.F. RESISTOR	:	Metal Film Resistor
W.W. RESISTOR	:	Wire Wound Resistor

CAPACITORS

In the "Description" column:
All capacitance values are in microfarad (μF) unless otherwise indicated.
P expresses picofarad (10^{-12} farad, pF).

In the "Parts Name" column:

TRIM. CAPACITOR	:	Trimmer Capacitor
CER. CAPACITOR	:	Ceramic Capacitor
E. CAPACITOR	:	Electrolytic Capacitor
TAN. CAPACITOR	:	Tantalum Capacitor
MPP CAPACITOR	:	Metalized Polypropylene Capacitor
O.F. CAPACITOR	:	Oil Film Capacitor
MPF CAPACITOR	:	Metalized Polyfilm Capacitor
F.M. CAPACITOR	:	Film Mica Capacitor
P.P. CAPACITOR	:	Polypropylene Capacitor
P.S. CAPACITOR	:	Polystyrene Capacitor

6.1 MOTHER-1 BOARD ASSEMBLY LIST [0][1]

SLK1018-A1A [0][1]□□□□□□□

Symbol No.	Part No.	Part Name	Description
CN1	PGZ02141-120	CONNECTOR	120PIN
CN2	PGZ02141-100	CONNECTOR	100PIN
CN3	PGZ02141-120	CONNECTOR	120PIN
CN4	PGZ02141-100	CONNECTOR	100PIN
CN5	PGZ02141-120	CONNECTOR	120PIN
CN6	PGZ02141-100	CONNECTOR	100PIN
CN7	PGZ02141-120	CONNECTOR	120PIN
CN8	PGZ02141-100	CONNECTOR	100PIN
CN9	PGZ02141-120	CONNECTOR	120PIN
CN10	PGZ02141-100	CONNECTOR	100PIN
CN11	PGZ02141-120	CONNECTOR	120PIN
CN12	PGZ02141-100	CONNECTOR	100PIN
CN13	PGZ02141-120	CONNECTOR	120PIN
CN14	PGZ02141-100	CONNECTOR	100PIN
CN15	PGZ02141-120	CONNECTOR	120PIN
CN16	PGZ02141-100	CONNECTOR	100PIN
CN17	PGZ02141-120	CONNECTOR	120PIN
CN18	PGZ02141-100	CONNECTOR	100PIN
CN19	PU59555-110	CONNECTOR	10PIN
CN20	PU60711-124	CONNECTOR	24PIN
CN21	PU60711-118	CONNECTOR	18PIN
CN22	PU59555-112	CONNECTOR	12PIN
CN23	PU59555-109	CONNECTOR	9PIN
CN24	PU60711-124	CONNECTOR	24PIN
CN25	PU60711-118	CONNECTOR	18PIN
CN26	PU59555-113	CONNECTOR	13PIN
CN27	PU59555-110	CONNECTOR	10PIN
CN28	PU59555-109	CONNECTOR	9PIN
CN29	PU59555-110	CONNECTOR	10PIN
CN30	PU59555-106	CONNECTOR	6PIN
CN31	PU60251-8	CONNECTOR	8PIN
CN32	PU60251-10	CONNECTOR	10PIN
CN33	PGZ01941-10	CONNECTOR	10PIN
CN34	PGZ01941-15	CONNECTOR	15PIN
CN35	PGZ01941-15	CONNECTOR	15PIN
CN36	PGZ01941-15	CONNECTOR	15PIN
CN37	PGZ01941-10	CONNECTOR	10PIN
CN38	PGZ01941-15	CONNECTOR	15PIN

6.2 MOTHER-2 BOARD ASSEMBLY LIST [0][2]

SLK1019-A1A [0][2]□□□□□□□

Symbol No.	Part No.	Part Name	Description
CN1	PGZ02141-100	CONNECTOR	100PIN
CN2	PGZ02141-100	CONNECTOR	100PIN
CN3	PGZ02141-100	CONNECTOR	100PIN
CN4	PGZ01941-15	CONNECTOR	15PIN
CN5	PGZ01941-15	CONNECTOR	15PIN
CN6	PGZ01941-6	CONNECTOR	6PIN
CN7	PU59555-112	CONNECTOR	12PIN
CN8	PU59555-107	CONNECTOR	7PIN
CN9	PU59555-106	CONNECTOR	6PIN
CN10	PU59555-106	CONNECTOR	6PIN
CN11	PU59555-110	CONNECTOR	10PIN
CN12	PU59555-109	CONNECTOR	9PIN
CN13	PU59555-113	CONNECTOR	13PIN
CN14	PU60711-124	CONNECTOR	24PIN
CN15	PU60711-118	CONNECTOR	18PIN

6.3 REC/ITI BOARD ASSEMBLY LIST 1 1

SLK1034-A2A 1 1 □ □ □ □ □ □

Symbol No.	Part No.	Part Name	Description
IC1	UPC78L05T	I.C.(M)	NEC
IC3	TC4053BF	I.C.(M)	TOSHIBA
IC5	NJM79L12UA	I.C.(M)	JRC
IC6	TC4053BF	I.C.(M)	TOSHIBA
IC7	UPC78L05T	I.C.(M)	NEC
IC8	DS90C032TM	I.C.(M)	NATIONAL SEMICO
IC11	TC74HC4040AF	I.C.(M)	TOSHIBA
IC13	TC74VHC153F	I.C.(M)	TOSHIBA
IC15	TC74VHC04F	I.C.(M)	TOSHIBA
IC16	74F74SJ	I.C.(M)	NS
IC17	TC7W32F	I.C.(M)	TOSHIBA
IC18	MC10H124M	I.C.(M)	MOTOROLA
IC19	NJM79L05UA	I.C.(M)	JRC
IC20	TC74HC125AF	I.C.(M)	TOSHIBA
IC21	UPC78L12T	I.C.(M)	NEC
IC22	NJM79L05UA	I.C.(M)	JRC
IC23	NJM79L12UA	I.C.(M)	JRC
IC24	NJM79L05UA	I.C.(M)	JRC
IC25	UPC78L05T	I.C.(M)	NEC
IC27	TC74HC04AF	I.C.(M)	TOSHIBA
IC28	UPC78L12T	I.C.(M)	NEC
IC29	NJM79L12UA	I.C.(M)	JRC
IC32	TC74HC04AF	I.C.(M)	TOSHIBA
IC33	UPC78L05T	I.C.(M)	NEC
IC34	TA8609F	I.C.(M)	TOSHIBA
Q1	2SB709A	TRANSISTOR	MATSUSHITA
Q2	2SD601A	TRANSISTOR	NEC
Q3	2SB709A	TRANSISTOR	MATSUSHITA
Q4	2SB709A	TRANSISTOR	MATSUSHITA
Q5	2SB709A	TRANSISTOR	MATSUSHITA
Q6	2SB709A	TRANSISTOR	MATSUSHITA
Q7	2SD601A	TRANSISTOR	NEC
Q8	2SB709A	TRANSISTOR	MATSUSHITA
Q9	2SB709A	TRANSISTOR	MATSUSHITA
Q10	2SB709A	TRANSISTOR	MATSUSHITA
Q11	2SC3735(45)	TRANSISTOR	NEC
Q12	2SC3357	TRANSISTOR	NEC
Q13	2SC3357	TRANSISTOR	NEC
Q14	2SC3735(45)	TRANSISTOR	NEC
Q15	2SC3357	TRANSISTOR	NEC
Q16	2SB956(R)	TRANSISTOR	MATSUSHITA
Q17	2SC3735(45)	TRANSISTOR	NEC
Q18	2SA1462Y3Y4	TRANSISTOR	NEC
Q19	2SC3735(45)	TRANSISTOR	NEC
Q20	2SC3357	TRANSISTOR	NEC
Q21	2SC3357	TRANSISTOR	NEC
Q22	2SC3735(45)	TRANSISTOR	NEC
Q23	2SC3357	TRANSISTOR	NEC
Q24	2SB956(R)	TRANSISTOR	MATSUSHITA
Q25	2SC3735(45)	TRANSISTOR	NEC
Q26	2SA1462Y3Y4	TRANSISTOR	NEC
Q27	2SC3735(45)	TRANSISTOR	NEC
Q28	2SC3357	TRANSISTOR	NEC
Q29	2SC3357	TRANSISTOR	NEC
Q30	2SC3735(45)	TRANSISTOR	NEC
Q31	2SC3357	TRANSISTOR	NEC
Q32	2SB956(R)	TRANSISTOR	MATSUSHITA
Q33	2SC3735(45)	TRANSISTOR	NEC

Symbol No.	Part No.	Part Name	Description
Q34	2SA1462Y3Y4	TRANSISTOR	NEC
Q35	2SC3735(45)	TRANSISTOR	NEC
Q36	2SC3357	TRANSISTOR	NEC
Q37	2SC3357	TRANSISTOR	NEC
Q38	2SC3735(45)	TRANSISTOR	NEC
Q39	2SC3357	TRANSISTOR	NEC
Q40	2SB956(R)	TRANSISTOR	MATSUSHITA
Q41	2SC3735(45)	TRANSISTOR	NEC
Q42	2SA1462Y3Y4	TRANSISTOR	NEC
Q43	2SA1462Y3Y4	TRANSISTOR	NEC
Q44	2SC3735(45)	TRANSISTOR	NEC
Q45	2SA1462Y3Y4	TRANSISTOR	NEC
Q46	2SC3735(45)	TRANSISTOR	NEC
Q47	2SC3735(45)	TRANSISTOR	NEC
Q48	2SC3735(45)	TRANSISTOR	NEC
Q49	2SC3735(45)	TRANSISTOR	NEC
Q50	2SK508	F.E.T.	NEC
Q51	2SK508	F.E.T.	NEC
Q52	2SK508	F.E.T.	NEC
Q53	2SK508	F.E.T.	NEC
Q54	2SK508	F.E.T.	NEC
Q55	2SK508	F.E.T.	NEC
Q56	2SK508	F.E.T.	NEC
Q57	2SK508	F.E.T.	NEC
Q58	2SC3735(45)	TRANSISTOR	NEC
D1	DAN202K	DIODE	ROHM
D2	DAN202K	DIODE	ROHM
D3	DAN202K	DIODE	ROHM
D4	DAN202K	DIODE	ROHM
R2	NRSA63J-102	M.G.RESISTOR	1.0K 1/16W
R3	NRSA63J-222	M.G.RESISTOR	2.2K 1/16W
R4	NRSA63J-0R0	M.G.RESISTOR	0 1/16W
R6	NRSA63J-562	M.G.RESISTOR	5.6K 1/16W
R7	NRSA63J-0R0	M.G.RESISTOR	0 1/16W
R8	NRSA63J-331	M.G.RESISTOR	330 1/16W
R9	NRSA63J-272	M.G.RESISTOR	2.7K 1/16W
R10	NRSA63J-103	M.G.RESISTOR	10K 1/16W
R11	NRSA63J-222	M.G.RESISTOR	2.2K 1/16W
R12	NRSA63J-102	M.G.RESISTOR	1.0K 1/16W
R13	NRSA63J-102	M.G.RESISTOR	1.0K 1/16W
R14	NRSA63J-222	M.G.RESISTOR	2.2K 1/16W
R15	NRSA63J-102	M.G.RESISTOR	1.0K 1/16W
R16	NRSA63J-102	M.G.RESISTOR	1.0K 1/16W
R18	NRSA63J-102	M.G.RESISTOR	1.0K 1/16W
R19	NRSA63J-222	M.G.RESISTOR	2.2K 1/16W
R20	NRSA63J-0R0	M.G.RESISTOR	0 1/16W
R22	NRSA63J-562	M.G.RESISTOR	5.6K 1/16W
R23	NRSA63J-0R0	M.G.RESISTOR	0 1/16W
R24	NRSA63J-331	M.G.RESISTOR	330 1/16W
R25	NRSA63J-272	M.G.RESISTOR	2.7K 1/16W
R26	NRSA63J-103	M.G.RESISTOR	10K 1/16W
R27	NRSA63J-222	M.G.RESISTOR	2.2K 1/16W
R28	NRSA63J-102	M.G.RESISTOR	1.0K 1/16W
R29	NRSA63J-102	M.G.RESISTOR	1.0K 1/16W
R30	NRSA63J-222	M.G.RESISTOR	2.2K 1/16W
R31	NRSA63J-102	M.G.RESISTOR	1.0K 1/16W
R32	NRSA63J-102	M.G.RESISTOR	1.0K 1/16W

Symbol No.	Part No.	Part Name	Description	
R33	NRSA63J-101	M.G.RESISTOR	100	1/16W
R34	NRSA63J-101	M.G.RESISTOR	100	1/16W
R35	NRSA63J-101	M.G.RESISTOR	100	1/16W
R36	NRSA63J-101	M.G.RESISTOR	100	1/16W
R37	NRSA63J-101	M.G.RESISTOR	100	1/16W
R38	NRSA63J-101	M.G.RESISTOR	100	1/16W
R39	NRSA63J-101	M.G.RESISTOR	100	1/16W
R40	NRSA63J-101	M.G.RESISTOR	100	1/16W
R41	NRSA63J-101	M.G.RESISTOR	100	1/16W
R42	NRSA63J-0R0	M.G.RESISTOR	0	1/16W
R43	NRSA63J-0R0	M.G.RESISTOR	0	1/16W
R46	NRSA63J-102	M.G.RESISTOR	1.0K	1/16W
R47	NRSA63J-102	M.G.RESISTOR	1.0K	1/16W
R48	NRSA63J-103	M.G.RESISTOR	10K	1/16W
R49	NRSA63J-103	M.G.RESISTOR	10K	1/16W
R50	NRSA63J-102	M.G.RESISTOR	1.0K	1/16W
R51	NRSA63J-102	M.G.RESISTOR	1.0K	1/16W
R52	NRSA63J-102	M.G.RESISTOR	1.0K	1/16W
R53	NRSA63J-102	M.G.RESISTOR	1.0K	1/16W
R54	NRSA63J-102	M.G.RESISTOR	1.0K	1/16W
R55	NRSA63J-102	M.G.RESISTOR	1.0K	1/16W
R56	NRSA63J-102	M.G.RESISTOR	1.0K	1/16W
R57	NRSA63J-104	M.G.RESISTOR	100K	1/16W
R58	NRSA63J-104	M.G.RESISTOR	100K	1/16W
R59	NRSA63J-104	M.G.RESISTOR	100K	1/16W
R60	NRSA63J-104	M.G.RESISTOR	100K	1/16W
R61	NRSA63J-334	M.G.RESISTOR	330K	1/16W
R62	NRSA63J-104	M.G.RESISTOR	100K	1/16W
R63	NRSA63J-104	M.G.RESISTOR	100K	1/16W
R64	NRSA63J-104	M.G.RESISTOR	100K	1/16W
R65	NRSA63J-104	M.G.RESISTOR	100K	1/16W
R66	NRSA63J-102	M.G.RESISTOR	1.0K	1/16W
R67	NRSA63J-102	M.G.RESISTOR	1.0K	1/16W
R68	NRSA63J-101	M.G.RESISTOR	100	1/16W
R69	NRSA63J-470	M.G.RESISTOR	47	1/16W
R70	NRSA63J-102	M.G.RESISTOR	1.0K	1/16W
R72	NRSA63J-470	M.G.RESISTOR	47	1/16W
R73	NRSA63J-102	M.G.RESISTOR	1.0K	1/16W
R74	NRSA63J-101	M.G.RESISTOR	100	1/16W
R75	NRSA63J-271	M.G.RESISTOR	270	1/16W
R76	NRSA63J-472	M.G.RESISTOR	4.7K	1/16W
R77	NRSA63J-101	M.G.RESISTOR	100	1/16W
R79	NRSA63J-512	M.G.RESISTOR	5.1K	1/16W
R80	NRSA63J-512	M.G.RESISTOR	5.1K	1/16W
R81	NRSA63J-272	M.G.RESISTOR	2.7K	1/16W
R82	NRSA63J-103	M.G.RESISTOR	10K	1/16W
R83	NRSA63J-822	M.G.RESISTOR	8.2K	1/16W
R84	NRSA63J-102	M.G.RESISTOR	1.0K	1/16W
R85	NRSA63J-102	M.G.RESISTOR	1.0K	1/16W
R86	NRSA63J-101	M.G.RESISTOR	100	1/16W
R87	NRSA63J-470	M.G.RESISTOR	47	1/16W
R88	NRSA63J-102	M.G.RESISTOR	1.0K	1/16W
R90	NRSA63J-470	M.G.RESISTOR	47	1/16W
R91	NRSA63J-102	M.G.RESISTOR	1.0K	1/16W
R92	NRSA63J-101	M.G.RESISTOR	100	1/16W
R93	NRSA63J-271	M.G.RESISTOR	270	1/16W
R94	NRSA63J-472	M.G.RESISTOR	4.7K	1/16W
R95	NRSA63J-101	M.G.RESISTOR	100	1/16W
R97	NRSA63J-512	M.G.RESISTOR	5.1K	1/16W

Symbol No.	Part No.	Part Name	Description	
R98	NRSA63J-512	M.G.RESISTOR	5.1K	1/16W
R99	NRSA63J-272	M.G.RESISTOR	2.7K	1/16W
R100	NRSA63J-103	M.G.RESISTOR	10K	1/16W
R101	NRSA63J-822	M.G.RESISTOR	8.2K	1/16W
R102	NRSA63J-102	M.G.RESISTOR	1.0K	1/16W
R103	NRSA63J-102	M.G.RESISTOR	1.0K	1/16W
R104	NRSA63J-101	M.G.RESISTOR	100	1/16W
R105	NRSA63J-470	M.G.RESISTOR	47	1/16W
R106	NRSA63J-102	M.G.RESISTOR	1.0K	1/16W
R108	NRSA63J-470	M.G.RESISTOR	47	1/16W
R109	NRSA63J-102	M.G.RESISTOR	1.0K	1/16W
R110	NRSA63J-101	M.G.RESISTOR	100	1/16W
R111	NRSA63J-271	M.G.RESISTOR	270	1/16W
R112	NRSA63J-472	M.G.RESISTOR	4.7K	1/16W
R113	NRSA63J-101	M.G.RESISTOR	100	1/16W
R115	NRSA63J-512	M.G.RESISTOR	5.1K	1/16W
R116	NRSA63J-512	M.G.RESISTOR	5.1K	1/16W
R117	NRSA63J-272	M.G.RESISTOR	2.7K	1/16W
R118	NRSA63J-103	M.G.RESISTOR	10K	1/16W
R119	NRSA63J-822	M.G.RESISTOR	8.2K	1/16W
R120	NRSA63J-102	M.G.RESISTOR	1.0K	1/16W
R121	NRSA63J-102	M.G.RESISTOR	1.0K	1/16W
R122	NRSA63J-101	M.G.RESISTOR	100	1/16W
R123	NRSA63J-470	M.G.RESISTOR	47	1/16W
R124	NRSA63J-102	M.G.RESISTOR	1.0K	1/16W
R126	NRSA63J-470	M.G.RESISTOR	47	1/16W
R127	NRSA63J-102	M.G.RESISTOR	1.0K	1/16W
R128	NRSA63J-101	M.G.RESISTOR	100	1/16W
R129	NRSA63J-271	M.G.RESISTOR	270	1/16W
R130	NRSA63J-472	M.G.RESISTOR	4.7K	1/16W
R131	NRSA63J-101	M.G.RESISTOR	100	1/16W
R133	NRSA63J-512	M.G.RESISTOR	5.1K	1/16W
R134	NRSA63J-512	M.G.RESISTOR	5.1K	1/16W
R135	NRSA63J-272	M.G.RESISTOR	2.7K	1/16W
R136	NRSA63J-103	M.G.RESISTOR	10K	1/16W
R137	NRSA63J-822	M.G.RESISTOR	8.2K	1/16W
R138	NRSA63J-103	M.G.RESISTOR	10K	1/16W
R139	NRSA63J-272	M.G.RESISTOR	2.7K	1/16W
R140	NRSA63J-102	M.G.RESISTOR	1.0K	1/16W
R141	NRSA63J-103	M.G.RESISTOR	10K	1/16W
R142	NRSA63J-272	M.G.RESISTOR	2.7K	1/16W
R143	NRSA63J-102	M.G.RESISTOR	1.0K	1/16W
R144	NRSA63J-101	M.G.RESISTOR	100	1/16W
R145	NRSA63J-561	M.G.RESISTOR	560	1/16W
R146	NRSA63J-471	M.G.RESISTOR	470	1/16W
R147	NRSA63J-103	M.G.RESISTOR	10K	1/16W
R148	NRSA63J-471	M.G.RESISTOR	470	1/16W
R149	NRSA63J-471	M.G.RESISTOR	470	1/16W
R150	NRSA63J-560	M.G.RESISTOR	56	1/16W
R151	NRSA63J-182	M.G.RESISTOR	1.8K	1/16W
R152	NRSA63J-182	M.G.RESISTOR	1.8K	1/16W
R153	NRSA63J-0R0	M.G.RESISTOR	0	1/16W
R154	NRSA63J-103	M.G.RESISTOR	10K	1/16W
R155	NRSA63J-103	M.G.RESISTOR	10K	1/16W
R156	NRSA63J-0R0	M.G.RESISTOR	0	1/16W
R157	NRSA63J-103	M.G.RESISTOR	10K	1/16W
R158	NRSA63J-103	M.G.RESISTOR	10K	1/16W
R159	NRSA63J-3R9	M.G.RESISTOR	3.9	1/16W
R160	NRSA63J-3R9	M.G.RESISTOR	3.9	1/16W

Symbol No.	Part No.	Part Name	Description	
R161	NRSA63J-472	M.G.RESISTOR	4.7K	1/16W
R162	NRSA63J-103	M.G.RESISTOR	10K	1/16W
R163	NRSA63J-121	M.G.RESISTOR	120	1/16W
R164	NRSA63J-103	M.G.RESISTOR	10K	1/16W
R165	NRSA63J-472	M.G.RESISTOR	4.7K	1/16W
R166	NRSA63J-103	M.G.RESISTOR	10K	1/16W
R167	NRSA63J-103	M.G.RESISTOR	10K	1/16W
R168	NRSA63J-101	M.G.RESISTOR	100	1/16W
R170	NRSA63J-472	M.G.RESISTOR	4.7K	1/16W
R171	NRSA63J-103	M.G.RESISTOR	10K	1/16W
R172	NRSA63J-121	M.G.RESISTOR	120	1/16W
R173	NRSA63J-472	M.G.RESISTOR	4.7K	1/16W
R174	NRSA63J-103	M.G.RESISTOR	10K	1/16W
R175	NRSA63J-103	M.G.RESISTOR	10K	1/16W
R176	NRSA63J-103	M.G.RESISTOR	10K	1/16W
R177	NRSA63J-101	M.G.RESISTOR	100	1/16W
R179	NRSA63J-472	M.G.RESISTOR	4.7K	1/16W
R180	NRSA63J-103	M.G.RESISTOR	10K	1/16W
R181	NRSA63J-121	M.G.RESISTOR	120	1/16W
R182	NRSA63J-472	M.G.RESISTOR	4.7K	1/16W
R183	NRSA63J-103	M.G.RESISTOR	10K	1/16W
R184	NRSA63J-103	M.G.RESISTOR	10K	1/16W
R185	NRSA63J-103	M.G.RESISTOR	10K	1/16W
R186	NRSA63J-101	M.G.RESISTOR	100	1/16W
R188	NRSA63J-472	M.G.RESISTOR	4.7K	1/16W
R189	NRSA63J-103	M.G.RESISTOR	10K	1/16W
R190	NRSA63J-121	M.G.RESISTOR	120	1/16W
R191	NRSA63J-472	M.G.RESISTOR	4.7K	1/16W
R192	NRSA63J-103	M.G.RESISTOR	10K	1/16W
R193	NRSA63J-103	M.G.RESISTOR	10K	1/16W
R194	NRSA63J-103	M.G.RESISTOR	10K	1/16W
R195	NRSA63J-101	M.G.RESISTOR	100	1/16W
R201	NRSA63J-333	M.G.RESISTOR	33K	1/16W
R202	NRSA63J-183	M.G.RESISTOR	18K	1/16W
R203	NRSA63J-271	M.G.RESISTOR	270	1/16W
R204	NRSA63J-331	M.G.RESISTOR	330	1/16W
R205	NRSA63J-102	M.G.RESISTOR	1.0K	1/16W
R206	NRSA63J-0R0	M.G.RESISTOR	0	1/16W
VR1	NVP1416-103	TRIM.RESISTOR	Not used	
VR2	NVP1416-103	TRIM.RESISTOR	Not used	
VR3	NVP1416-103	TRIM.RESISTOR	Not used	
VR4	NVP1416-103	TRIM.RESISTOR	Not used	
VR5	NVP1416-202	TRIM.RESISTOR	Not used	
VR6	NVP1416-202	TRIM.RESISTOR	Not used	
VR7	NVP1416-202	TRIM.RESISTOR	Not used	
VR8	NVP1416-202	TRIM.RESISTOR	Not used	
C1	NCF31CZ-104	CER.CAPACITOR	0.10	16V
C2	NEH91CM-476	E.CAPACITOR	47	16V
C3	NCF31CZ-104	CER.CAPACITOR	0.10	16V
C8	NCS31HJ-100	CER.CAPACITOR	10P	50V
C9	NCB31HK-102	CER.CAPACITOR	1000P	50V
C10	NCB31HK-103	CER.CAPACITOR	0.010	50V
C11	NCB31HK-103	CER.CAPACITOR	0.010	50V
C12	NCB31HK-103	CER.CAPACITOR	0.010	50V
C13	NCB31HK-103	CER.CAPACITOR	0.010	50V
C17	NCF31CZ-104	CER.CAPACITOR	0.10	16V

Symbol No.	Part No.	Part Name	Description	
C18	NEH91CM-476	E.CAPACITOR	47	16V
C19	NCF31CZ-104	CER.CAPACITOR	0.10	16V
C21	NCS31HJ-100	CER.CAPACITOR	10P	50V
C22	NCB31HK-102	CER.CAPACITOR	1000P	50V
C23	NCB31HK-103	CER.CAPACITOR	0.010	50V
C24	NCB31HK-103	CER.CAPACITOR	0.010	50V
C25	NCB31HK-103	CER.CAPACITOR	0.010	50V
C26	NCB31HK-103	CER.CAPACITOR	0.010	50V
C27	NCF31CZ-104	CER.CAPACITOR	0.10	16V
C28	NEH91CM-476	E.CAPACITOR	47	16V
C29	NCF31CZ-104	CER.CAPACITOR	0.10	16V
C33	NCB31HK-103	CER.CAPACITOR	0.010	50V
C35	NCB31HK-103	CER.CAPACITOR	0.010	50V
C37	NCB31HK-103	CER.CAPACITOR	0.010	50V
C38	NCF31CZ-104	CER.CAPACITOR	0.10	16V
C40	NCB31HK-103	CER.CAPACITOR	0.010	50V
C41	NCF31CZ-104	CER.CAPACITOR	0.10	16V
C42	NEH91CM-476	E.CAPACITOR	47	16V
C43	NCF31CZ-104	CER.CAPACITOR	0.10	16V
C44	NCB31HK-103	CER.CAPACITOR	0.010	50V
C45	NCF31CZ-104	CER.CAPACITOR	0.10	16V
C46	NEH91CM-476	E.CAPACITOR	47	16V
C47	NCF31CZ-104	CER.CAPACITOR	0.10	16V
C48	NCF31CZ-104	CER.CAPACITOR	0.10	16V
C49	NEH91CM-476	E.CAPACITOR	47	16V
C50	NCF31CZ-104	CER.CAPACITOR	0.10	16V
C51	NCF31CZ-104	CER.CAPACITOR	0.10	16V
C52	NCB31HK-103	CER.CAPACITOR	0.010	50V
C53	NCS31HJ-101	CER.CAPACITOR	100P	50V
C54	NCS31HJ-101	CER.CAPACITOR	100P	50V
C56	NCB31HK-102	CER.CAPACITOR	1000P	50V
C57	NCS31HJ-151	CER.CAPACITOR	150P	50V
C58	NCF31CZ-104	CER.CAPACITOR	0.10	16V
C59	NEH91CM-476	E.CAPACITOR	47	16V
C60	NCF31CZ-104	CER.CAPACITOR	0.10	16V
C61	NCF31CZ-104	CER.CAPACITOR	0.10	16V
C62	NEH91CM-476	E.CAPACITOR	47	16V
C63	NCF31CZ-104	CER.CAPACITOR	0.10	16V
C64	NCB31HK-103	CER.CAPACITOR	0.010	50V
C65	NEH91CM-476	E.CAPACITOR	47	16V
C66	NCB31HK-103	CER.CAPACITOR	0.010	50V
C67	NCF31CZ-104	CER.CAPACITOR	0.10	16V
C68	NCF31CZ-104	CER.CAPACITOR	0.10	16V
C69	NCB31HK-103	CER.CAPACITOR	0.010	50V
C70	NCS31HJ-101	CER.CAPACITOR	100P	50V
C71	NCS31HJ-101	CER.CAPACITOR	100P	50V
C73	NCB31HK-102	CER.CAPACITOR	1000P	50V
C74	NCS31HJ-151	CER.CAPACITOR	150P	50V
C75	NCF31CZ-104	CER.CAPACITOR	0.10	16V
C77	NCF31CZ-104	CER.CAPACITOR	0.10	16V
C78	NCF31CZ-104	CER.CAPACITOR	0.10	16V
C79	NEH91CM-476	E.CAPACITOR	47	16V
C80	NCF31CZ-104	CER.CAPACITOR	0.10	16V
C81	NCF31CZ-104	CER.CAPACITOR	0.10	16V
C82	NCB31HK-103	CER.CAPACITOR	0.010	50V
C83	NCS31HJ-101	CER.CAPACITOR	100P	50V
C84	NCS31HJ-101	CER.CAPACITOR	100P	50V
C86	NCB31HK-102	CER.CAPACITOR	1000P	50V
C87	NCS31HJ-151	CER.CAPACITOR	150P	50V
C88	NCF31CZ-104	CER.CAPACITOR	0.10	16V

REC/ITI)

Symbol No.	Part No.	Part Name	Description	
C89	NEH91CM-476	E.CAPACITOR	47	16V
C90	NCF31CZ-104	CER.CAPACITOR	0.10	16V
C91	NCF31CZ-104	CER.CAPACITOR	0.10	16V
C92	NCB31HK-103	CER.CAPACITOR	0.010	50V
C93	NCS31HJ-101	CER.CAPACITOR	100P	50V
C94	NCS31HJ-101	CER.CAPACITOR	100P	50V
C96	NCB31HK-102	CER.CAPACITOR	1000P	50V
C100	NCS31HJ-151	CER.CAPACITOR	150P	50V
C101	NCF31CZ-104	CER.CAPACITOR	0.10	16V
C103	NCF31CZ-104	CER.CAPACITOR	0.10	16V
C104	NCF31CZ-104	CER.CAPACITOR	0.10	16V
C105	NCS31HJ-101	CER.CAPACITOR	100P	50V
C106	NCS31HJ-101	CER.CAPACITOR	100P	50V
C107	NCF31CZ-104	CER.CAPACITOR	0.10	16V
C108	NEE21AM-476	TAN.CAPACITOR	47	10V
C109	NCF31CZ-104	CER.CAPACITOR	0.10	16V
C110	NCF31CZ-104	CER.CAPACITOR	0.10	16V
C111	NCF31CZ-104	CER.CAPACITOR	0.10	16V
C112	NCF31CZ-104	CER.CAPACITOR	0.10	16V
C113	NCS31HJ-101	CER.CAPACITOR	100P	50V
C114	NCF31CZ-104	CER.CAPACITOR	0.10	16V
C115	NCF31CZ-104	CER.CAPACITOR	0.10	16V
C116	NEE21AM-476	TAN.CAPACITOR	47	10V
C117	NCF31CZ-104	CER.CAPACITOR	0.10	16V
C118	NCF31CZ-104	CER.CAPACITOR	0.10	16V
C119	NCB31HK-103	CER.CAPACITOR	0.010	50V
C120	NCS31HJ-270	CER.CAPACITOR	27P	50V
C121	NCS31HJ-270	CER.CAPACITOR	27P	50V
C122	NCS31HJ-101	CER.CAPACITOR	100P	50V
C123	NCS31HJ-101	CER.CAPACITOR	100P	50V
C124	NEH91CM-106	E.CAPACITOR	10	16V
C128	NEH91CM-106	E.CAPACITOR	10	16V
C130	NEH91CM-106	E.CAPACITOR	10	16V
C141	NEF11CM-106	TAN.CAPACITOR	10	16V
C142	NCB31HK-102	CER.CAPACITOR	1000P	50V
C143	NCB31HK-102	CER.CAPACITOR	1000P	50V
C144	NCF31CZ-104	CER.CAPACITOR	0.10	16V
C145	NCF31CZ-104	CER.CAPACITOR	0.10	16V
C146	NCB31HK-102	CER.CAPACITOR	1000P	50V
C147	NCB31HK-102	CER.CAPACITOR	1000P	50V
C148	NCF31CZ-104	CER.CAPACITOR	0.10	16V
C149	NCF31CZ-104	CER.CAPACITOR	0.10	16V
C150	NCF31CZ-104	CER.CAPACITOR	0.10	16V
C151	NCF31CZ-104	CER.CAPACITOR	0.10	16V
C152	NCB31HK-102	CER.CAPACITOR	1000P	50V
C153	NCB31HK-102	CER.CAPACITOR	1000P	50V
C154	NCF31CZ-104	CER.CAPACITOR	0.10	16V
C155	NCF31CZ-104	CER.CAPACITOR	0.10	16V
C156	NCB31HK-102	CER.CAPACITOR	1000P	50V
C157	NCB31HK-102	CER.CAPACITOR	1000P	50V
C158	NCB31HK-103	CER.CAPACITOR	0.010	50V
C159	NCB31HK-102	CER.CAPACITOR	1000P	50V
C160	NCB31HK-103	CER.CAPACITOR	0.010	50V
C161	NCB31HK-103	CER.CAPACITOR	0.010	50V
C162	NCT06CH-120	CER.CAPACITOR	12P	50V
C163	NCT06CH-120	CER.CAPACITOR	12P	50V
L1	PU58201-101	COIL	100μ	

Symbol No.	Part No.	Part Name	Description
CN1	PU56258-14	CONNECTOR	14PIN
CN2	PGZ02149-103	CONNECTOR	3PIN
CN3	PGZ02149-110	CONNECTOR	10PIN
CN4	PGZ02149-106	CONNECTOR	6PIN
CN5	PGZ02149-109	CONNECTOR	9PIN
CN6	PGZ02149-107	CONNECTOR	7PIN
TP9	SSV1096-001	TEST POINT	
TP10	SSV1096-001	TEST POINT	
TP11	SSV1096-001	TEST POINT	
TP12	SSV1096-001	TEST POINT	
TP13	SSV1096-001	TEST POINT	
TP14	SSV1096-001	TEST POINT	
TP15	SSV1096-001	TEST POINT	
TP19	SSV1096-001	TEST POINT	
TP20	SSV1096-001	TEST POINT	
TP21	SSV1096-001	TEST POINT	
TP22	SSV1096-001	TEST POINT	
TP23	SSV1096-001	TEST POINT	
K1	PGZ00627	FERRATE BEADS	
K2	PGZ00627	FERRATE BEADS	
K3	PGZ00627	FERRATE BEADS	
K4	PGZ00627	FERRATE BEADS	
K5	PGZ00627	FERRATE BEADS	
K7	PGZ00627	FERRATE BEADS	
K8	PGZ00627	FERRATE BEADS	
K9	PGZ00627	FERRATE BEADS	
K10	PGZ00627	FERRATE BEADS	
K11	PGZ00627	FERRATE BEADS	
K13	PGZ00627	FERRATE BEADS	
K14	PGZ00627	FERRATE BEADS	
K15	PGZ00627	FERRATE BEADS	
K17	PGZ00627	FERRATE BEADS	
K18	PGZ00627	FERRATE BEADS	
K19	PGZ00627	FERRATE BEADS	
T1	PGZ02197	P.TRANS	
T2	PGZ02197	P.TRANS	
T3	PGZ02197	P.TRANS	
T4	PGZ02197	P.TRANS	
SL1	PRD31203	SHIELD A	
SL2	PRD31204-01-01	SHIELD B	
SL3	PRD44787	ITI SHIELD	
BK1	PRD44235	BRACKET	
SC1	DPSP2608Z	SCREW	M2.6×8
SC2	SDSP2606Z	SCREW	M2.6×6
SC3	WBS2600N	LOCK WASHER	CV

6.4 RF PROCESS1 BOARD ASSEMBLY LIST [1][2]

SLK1035-A2A [1][2]□□□□□□□

Symbol No.	Part No.	Part Name	Description
IC1	TC4053BF	I.C.(M)	TOSHIBA
IC2	SSI32F8001	I.C.(M)	TDK
IC3	CLC520AJE	I.C.(M)	COMLINEAR
IC4	CLC401AJE	I.C.(M)	COMLINEAR
IC5	LM360M	I.C.(M)	NS
IC6	UPC4074G2	I.C.(M)	NEC
IC7	NJM7805FA	I.C.(M)	JRC
IC8	NJM79M05FA	I.C.(M)	JRC
IC9	BR24C01AF	I.C.(M)	ROHM
IC10	JCL0027	I.C.(M)	JVC
IC11	DS90C031TM	I.C.(M)	NATIONAL SEMICO
IC12	TC74VHCT04F	I.C.(M)	TOSHIBA
IC13	LM318M	I.C.(M)	NS
IC14	MC10H116M	I.C.(M)	MOTOROLA
IC15	UPC4074G2	I.C.(M)	NEC
IC16	TC4053BF	I.C.(M)	TOSHIBA
IC17	UPD78P054GC-301	I.C.(M)	NEC
IC18	UPC4082G2	I.C.(M)	NEC
IC19	TC4053BF	I.C.(M)	TOSHIBA
IC20	MC10H125M	I.C.(M)	MOTOROLA
IC21	TC74VHC04F	I.C.(M)	TOSHIBA
IC22	TC7W04F	I.C.(M)	TOSHIBA
IC27	TC4053BF	I.C.(M)	TOSHIBA
IC28	UPC4074G2	I.C.(M)	NEC
IC30	MC33269DR2-3.3	I.C.(M)	MOTOROLA
IC31	M62352FP	I.C.(M)	MITSUBISHI
IC32	TC74HC08AF	I.C.(M)	TOSHIBA
IC33	MC74HC74AF	I.C.(M)	MOTOROLA
Q1	2SC3735(45)	TRANSISTOR	NEC
Q2	2SC3735(45)	TRANSISTOR	NEC
Q3	2SC3735(45)	TRANSISTOR	NEC
Q4	2SC3735(45)	TRANSISTOR	NEC
Q5	2SC3735(45)	TRANSISTOR	NEC
Q6	2SC3735(45)	TRANSISTOR	NEC
Q7	2SA1462Y3Y4	TRANSISTOR	NEC
Q8	2SC3735(45)	TRANSISTOR	NEC
Q9	2SC3735(45)	TRANSISTOR	NEC
Q10	2SC3735(45)	TRANSISTOR	NEC
Q11	2SC3735(45)	TRANSISTOR	NEC
Q12	2SA1462Y3Y4	TRANSISTOR	NEC
Q13	2SC3735(45)	TRANSISTOR	NEC
Q14	2SC3735(45)	TRANSISTOR	NEC
Q15	2SC3735(45)	TRANSISTOR	NEC
Q16	2SA1462Y3Y4	TRANSISTOR	NEC
Q17	FA1A4M	TRANSISTOR	
Q18	2SA1462Y3Y4	TRANSISTOR	NEC
Q19	2SA1462Y3Y4	TRANSISTOR	NEC
Q20	2SA1462Y3Y4	TRANSISTOR	NEC
Q21	2SC3735(45)	TRANSISTOR	NEC
Q22	2SC3735(45)	TRANSISTOR	NEC
Q23	2SC3735(45)	TRANSISTOR	NEC
Q24	2SC3735(45)	TRANSISTOR	NEC
Q25	2SA1462Y3Y4	TRANSISTOR	NEC
Q26	2SA1462Y3Y4	TRANSISTOR	NEC
Q27	2SA1462Y3Y4	TRANSISTOR	NEC
Q28	FA1A4M	TRANSISTOR	NEC
Q29	FA1A4M	TRANSISTOR	NEC
Q30	FA1A4M	TRANSISTOR	NEC

Symbol No.	Part No.	Part Name	Description	
Q31	FA1A4M	TRANSISTOR	NEC	
Q32	2SA1462Y3Y4	TRANSISTOR	NEC	
Q33	2SA1462Y3Y4	TRANSISTOR	NEC	
Q34	2SC3735(45)	TRANSISTOR	NEC	
Q35	2SA1462Y3Y4	TRANSISTOR	NEC	
Q36	2SC3735(45)	TRANSISTOR	NEC	
Q37	2SA1462Y3Y4	TRANSISTOR	NEC	
Q38	2SK1228	F.E.T.	MATSUSHITA	
Q39	FA1A4M	TRANSISTOR	NEC	
Q40	FA1A4M	TRANSISTOR	NEC	
Q41	FA1A4M	TRANSISTOR	NEC	
Q42	FA1A4M	TRANSISTOR	NEC	
Q43	FA1A4M	TRANSISTOR	NEC	
Q44	FA1A4M	TRANSISTOR	NEC	
Q45	FA1A4M	TRANSISTOR	NEC	
Q66	FA1A4M	TRANSISTOR	NEC	
Q100	2SC3735(45)	TRANSISTOR	NEC	
D1	RB731U	DIODE	ROHM	
D2	RB731U	DIODE	ROHM	
D3	RB731U	DIODE	ROHM	
D4	RB731U	DIODE	ROHM	
D5	DAN202K	DIODE	ROHM	
D6	RB731U	DIODE	ROHM	
D7	DAN202K	DIODE	ROHM	
LD1	SLR-55MC3F	LED	ROHM	
R1	NRSA63J-220	M.G.RESISTOR	22	1/16W
R2	NRSA63J-820	M.G.RESISTOR	82	1/16W
R3	NRSA63J-221	M.G.RESISTOR	220	1/16W
R4	NRSA63J-101	M.G.RESISTOR	100	1/16W
R5	NRSA63J-103	M.G.RESISTOR	10K	1/16W
R6	NRSA63J-100	M.G.RESISTOR	10	1/16W
R7	NRSA63J-223	M.G.RESISTOR	22K	1/16W
R8	NRSA63J-103	M.G.RESISTOR	10K	1/16W
R9	NRSA63J-100	M.G.RESISTOR	10	1/16W
R10	NRSA63J-223	M.G.RESISTOR	22K	1/16W
R11	NRSA63J-102	M.G.RESISTOR	1.0K	1/16W
R12	NRSA63J-103	M.G.RESISTOR	10K	1/16W
R13	NRSA63J-560	M.G.RESISTOR	56	1/16W
R14	NRSA63J-102	M.G.RESISTOR	1.0K	1/16W
R15	NRSA63J-183	M.G.RESISTOR	18K	1/16W
R16	NRSA63J-103	M.G.RESISTOR	10K	1/16W
R17	NRSA63J-100	M.G.RESISTOR	10	1/16W
R18	NRSA63J-681	M.G.RESISTOR	680	1/16W
R19	NRSA63J-471	M.G.RESISTOR	470	1/16W
R20	NRSA63J-470	M.G.RESISTOR	47	1/16W
R21	NRSA63J-182	M.G.RESISTOR	1.8K	1/16W
R22	NRSA63J-100	M.G.RESISTOR	10	1/16W
R23	NRSA63J-102	M.G.RESISTOR	1.0K	1/16W
R24	NRSA63J-331	M.G.RESISTOR	330	1/16W
R25	NRSA63J-181	M.G.RESISTOR	180	1/16W
R26	NRSA63J-151	M.G.RESISTOR	150	1/16W
R27	NRSA63J-331	M.G.RESISTOR	330	1/16W
R28	NRSA63J-221	M.G.RESISTOR	220	1/16W
R29	NRSA63J-100	M.G.RESISTOR	10	1/16W
R30	NRSA63J-392	M.G.RESISTOR	3.9K	1/16W

RF PROCESS1]

Symbol No.	Part No.	Part Name	Description	
R31	NRSA63J-223	M.G.RESISTOR	22K	1/16W
R32	NRSA63J-392	M.G.RESISTOR	3.9K	1/16W
R33	NRSA63J-223	M.G.RESISTOR	22K	1/16W
R34	NRSA63J-102	M.G.RESISTOR	1.0K	1/16W
R35	NRSA63J-102	M.G.RESISTOR	1.0K	1/16W
R36	NRSA63J-102	M.G.RESISTOR	1.0K	1/16W
R37	NRSA63J-151	M.G.RESISTOR	150	1/16W
R38	NRSA63J-102	M.G.RESISTOR	1.0K	1/16W
R39	NRSA63J-102	M.G.RESISTOR	1.0K	1/16W
R40	NRSA63J-182	M.G.RESISTOR	1.8K	1/16W
R41	NRSA63J-222	M.G.RESISTOR	2.2K	1/16W
R42	NRSA63J-102	M.G.RESISTOR	1.0K	1/16W
R43	NRSA63J-181	M.G.RESISTOR	180	1/16W
R44	NRSA63J-101	M.G.RESISTOR	100	1/16W
R45	NRSA63J-102	M.G.RESISTOR	1.0K	1/16W
R46	NRSA63J-151	M.G.RESISTOR	150	1/16W
R47	NRSA63J-151	M.G.RESISTOR	150	1/16W
R48	NRSA63J-181	M.G.RESISTOR	180	1/16W
R49	NRSA63J-471	M.G.RESISTOR	470	1/16W
R50	NRSA63J-181	M.G.RESISTOR	180	1/16W
R51	NRSA63J-472	M.G.RESISTOR	4.7K	1/16W
R52	NRSA63J-101	M.G.RESISTOR	100	1/16W
R53	NRSA63J-105	M.G.RESISTOR	1.0M	1/16W
R54	NRSA63J-105	M.G.RESISTOR	1.0M	1/16W
R55	NRSA63J-100	M.G.RESISTOR	10	1/16W
R56	NRSA63J-221	M.G.RESISTOR	220	1/16W
R57	NRSA63J-223	M.G.RESISTOR	22K	1/16W
R58	NRSA63J-123	M.G.RESISTOR	12K	1/16W
R59	NRSA63J-561	M.G.RESISTOR	560	1/16W
R60	NRSA63J-102	M.G.RESISTOR	1.0K	1/16W
R61	NRSA63J-221	M.G.RESISTOR	220	1/16W
R62	NRSA63J-560	M.G.RESISTOR	56	1/16W
R63	NRSA63J-102	M.G.RESISTOR	1.0K	1/16W
R64	NRSA63J-103	M.G.RESISTOR	10K	1/16W
R65	NRSA63J-222	M.G.RESISTOR	2.2K	1/16W
R66	NRSA63J-103	M.G.RESISTOR	10K	1/16W
R67	NRSA63J-821	M.G.RESISTOR	820	1/16W
R68	NRSA63J-510	M.G.RESISTOR	51	1/16W
R69	NRSA63J-152	M.G.RESISTOR	1.5K	1/16W
R70	NRSA63J-222	M.G.RESISTOR	2.2K	1/16W
R71	NRSA63J-221	M.G.RESISTOR	220	1/16W
R72	NRSA63J-822	M.G.RESISTOR	8.2K	1/16W
R73	NRSA63J-122	M.G.RESISTOR	1.2K	1/16W
R74	NRSA63J-221	M.G.RESISTOR	220	1/16W
R75	NRSA63J-822	M.G.RESISTOR	8.2K	1/16W
R76	NRSA63J-122	M.G.RESISTOR	1.2K	1/16W
R77	NRSA63J-103	M.G.RESISTOR	10K	1/16W
R78	NRSA63J-100	M.G.RESISTOR	10	1/16W
R79	NRVA63D-473	M.F.RESISTOR	47K	1/16W
R80	NRVA63D-273	M.F.RESISTOR	27K	1/16W
R81	NRSA63J-100	M.G.RESISTOR	10	1/16W
R82	NRVA63D-333	M.F.RESISTOR	33K	1/16W
R83	NRVA63D-183	M.F.RESISTOR	18K	1/16W
R84	NRSA63J-223	M.G.RESISTOR	22K	1/16W
R85	NRSA63J-393	M.G.RESISTOR	39K	1/16W
R86	NRSA63J-472	M.G.RESISTOR	4.7K	1/16W
R87	NRSA63J-152	M.G.RESISTOR	1.5K	1/16W
R88	NRSA63J-152	M.G.RESISTOR	1.5K	1/16W
R89	NRSA63J-122	M.G.RESISTOR	1.2K	1/16W
R90	NRSA63J-471	M.G.RESISTOR	470	1/16W

Symbol No.	Part No.	Part Name	Description	
R91	NRSA63J-331	M.G.RESISTOR	330	1/16W
R92	NRSA63J-561	M.G.RESISTOR	560	1/16W
R93	NRSA63J-392	M.G.RESISTOR	3.9K	1/16W
R94	NRSA63J-100	M.G.RESISTOR	10	1/16W
R95	NRSA63J-182	M.G.RESISTOR	1.8K	1/16W
R96	NRSA63J-471	M.G.RESISTOR	470	1/16W
R97	NRSA63J-100	M.G.RESISTOR	10	1/16W
R98	NRSA63J-103	M.G.RESISTOR	10K	1/16W
R99	NRSA63J-183	M.G.RESISTOR	18K	1/16W
R100	NRSA63J-470	M.G.RESISTOR	47	1/16W
R101	NRSA63J-100	M.G.RESISTOR	10	1/16W
R102	NRSA63J-471	M.G.RESISTOR	470	1/16W
R103	NRSA63J-822	M.G.RESISTOR	8.2K	1/16W
R104	NRSA63J-152	M.G.RESISTOR	1.5K	1/16W
R105	NRSA63J-103	M.G.RESISTOR	10K	1/16W
R106	NRSA63J-103	M.G.RESISTOR	10K	1/16W
R107	NRSA63J-104	M.G.RESISTOR	100K	1/16W
R108	NRSA63J-510	M.G.RESISTOR	51	1/16W
R109	NRSA63J-470	M.G.RESISTOR	47	1/16W
R110	NRSA63J-103	M.G.RESISTOR	10K	1/16W
R111	NRSA63J-103	M.G.RESISTOR	10K	1/16W
R112	NRSA63J-102	M.G.RESISTOR	1.0K	1/16W
R113	NRSA63J-220	M.G.RESISTOR	22	1/16W
R114	NRSA63J-100	M.G.RESISTOR	10	1/16W
R115	NRSA63J-100	M.G.RESISTOR	10	1/16W
R116	NRSA63J-102	M.G.RESISTOR	1.0K	1/16W
R117	NRSA63J-102	M.G.RESISTOR	1.0K	1/16W
R118	NRSA63J-105	M.G.RESISTOR	1.0M	1/16W
R119	NRSA63J-100	M.G.RESISTOR	10	1/16W
R120	NRSA63J-105	M.G.RESISTOR	1.0M	1/16W
R121	NRSA63J-100	M.G.RESISTOR	10	1/16W
R122	NRSA63J-104	M.G.RESISTOR	100K	1/16W
R123	NRSA63J-100	M.G.RESISTOR	10	1/16W
R125	NRSA63J-100	M.G.RESISTOR	10	1/16W
R126	NRSA63J-102	M.G.RESISTOR	1.0K	1/16W
R127	NRSA63J-100	M.G.RESISTOR	10	1/16W
R128	NRSA63J-102	M.G.RESISTOR	1.0K	1/16W
R129	NRSA63J-100	M.G.RESISTOR	10	1/16W
R131	NRSA63J-100	M.G.RESISTOR	10	1/16W
R133	NRSA63J-100	M.G.RESISTOR	10	1/16W
R134	NRSA63J-102	M.G.RESISTOR	1.0K	1/16W
R135	NRSA63J-100	M.G.RESISTOR	10	1/16W
R136	NRSA63J-100	M.G.RESISTOR	10	1/16W
R137	NRSA63J-333	M.G.RESISTOR	33K	1/16W
R138	NRSA63J-102	M.G.RESISTOR	1.0K	1/16W
R140	NRSA63J-222	M.G.RESISTOR	2.2K	1/16W
R141	NRSA63J-222	M.G.RESISTOR	2.2K	1/16W
R142	NRSA63J-222	M.G.RESISTOR	2.2K	1/16W
R143	NRSA63J-222	M.G.RESISTOR	2.2K	1/16W
R144	NRSA63J-103	M.G.RESISTOR	10K	1/16W
R145	NRSA63J-103	M.G.RESISTOR	10K	1/16W
R146	NRSA63J-103	M.G.RESISTOR	10K	1/16W
R147	NRSA63J-102	M.G.RESISTOR	1.0K	1/16W
R148	NRSA63J-102	M.G.RESISTOR	1.0K	1/16W
R149	NRSA63J-102	M.G.RESISTOR	1.0K	1/16W
R150	NRSA63J-102	M.G.RESISTOR	1.0K	1/16W
R151	NRSA63J-102	M.G.RESISTOR	1.0K	1/16W
R152	NRSA63J-102	M.G.RESISTOR	1.0K	1/16W
R153	NRSA63J-102	M.G.RESISTOR	1.0K	1/16W
R154	NRSA63J-102	M.G.RESISTOR	1.0K	1/16W

Symbol No.	Part No.	Part Name	Description	
R155	NRSA63J-473	M.G.RESISTOR	47K	1/16W
R156	NRSA63J-102	M.G.RESISTOR	1.0K	1/16W
R157	NRSA63J-102	M.G.RESISTOR	1.0K	1/16W
R158	NRSA63J-102	M.G.RESISTOR	1.0K	1/16W
R159	NRSA63J-102	M.G.RESISTOR	1.0K	1/16W
R160	NRSA63J-102	M.G.RESISTOR	1.0K	1/16W
R161	NRSA63J-102	M.G.RESISTOR	1.0K	1/16W
R162	NRSA63J-102	M.G.RESISTOR	1.0K	1/16W
R163	NRSA63J-102	M.G.RESISTOR	1.0K	1/16W
R164	NRSA63J-102	M.G.RESISTOR	1.0K	1/16W
R165	NRSA63J-102	M.G.RESISTOR	1.0K	1/16W
R166	NRSA63J-102	M.G.RESISTOR	1.0K	1/16W
R167	NRSA63J-102	M.G.RESISTOR	1.0K	1/16W
R168	NRSA63J-0R0	M.G.RESISTOR	0	1/16W
R169	NRSA63J-0R0	M.G.RESISTOR	0	1/16W
R170	NRSA63J-101	M.G.RESISTOR	100	1/16W
R171	NRSA63J-102	M.G.RESISTOR	1.0K	1/16W
R172	NRSA63J-222	M.G.RESISTOR	2.2K	1/16W
R173	NRSA63J-222	M.G.RESISTOR	2.2K	1/16W
R174	NRSA63J-102	M.G.RESISTOR	1.0K	1/16W
R175	NRSA63J-222	M.G.RESISTOR	2.2K	1/16W
R176	NRSA63J-222	M.G.RESISTOR	2.2K	1/16W
R177	NRSA63J-222	M.G.RESISTOR	2.2K	1/16W
R178	NRSA63J-222	M.G.RESISTOR	2.2K	1/16W
R179	NRSA63J-222	M.G.RESISTOR	2.2K	1/16W
R180	NRSA63J-222	M.G.RESISTOR	2.2K	1/16W
R181	NRSA63J-222	M.G.RESISTOR	2.2K	1/16W
R182	NRSA63J-222	M.G.RESISTOR	2.2K	1/16W
R183	NRSA63J-510	M.G.RESISTOR	51	1/16W
R184	NRSA63J-510	M.G.RESISTOR	51	1/16W
R185	NRSA63J-222	M.G.RESISTOR	2.2K	1/16W
R187	NRSA02J-180	M.G.RESISTOR	18	1/10W
R188	NRSA63J-102	M.G.RESISTOR	1.0K	1/16W
R189	NRSA63J-105	M.G.RESISTOR	1.0M	1/16W
R190	NRSA63J-105	M.G.RESISTOR	1.0M	1/16W
R191	NRSA63J-102	M.G.RESISTOR	1.0K	1/16W
R192	NRSA63J-471	M.G.RESISTOR	470	1/16W
R193	NRSA63J-0R0	M.G.RESISTOR	0	1/16W
R194	NRSA63J-0R0	M.G.RESISTOR	0	1/16W
R195	NRSA63J-102	M.G.RESISTOR	1.0K	1/16W
R196	NRSA63J-102	M.G.RESISTOR	1.0K	1/16W
R197	NRSA63J-101	M.G.RESISTOR	100	1/16W
R198	NRSA63J-101	M.G.RESISTOR	100	1/16W
R199	NRSA63J-105	M.G.RESISTOR	1.0M	1/16W
R200	NRSA63J-101	M.G.RESISTOR	100	1/16W
R201	NRSA63J-153	M.G.RESISTOR	15K	1/16W
R202	NRSA63J-820	M.G.RESISTOR	82	1/16W
R203	NRVA63D-222	M.G.RESISTOR	2.2K	1/16W
R204	NRSA63J-330	M.G.RESISTOR	33	1/16W
R205	NRVA63D-202	M.G.RESISTOR	2K	1/16W
R206	NRSA63J-103	M.G.RESISTOR	10K	1/16W
R207	NRSA63J-124	M.G.RESISTOR	120K	1/16W
R208	NRSA63J-123	M.G.RESISTOR	12K	1/16W
R209	NRSA63J-391	M.G.RESISTOR	390	1/16W
R210	NRSA63J-103	M.G.RESISTOR	10K	1/16W
R211	NRSA63J-222	M.G.RESISTOR	2.2K	1/16W
R212	NRSA63J-222	M.G.RESISTOR	2.2K	1/16W
R213	NRSA63J-471	M.G.RESISTOR	470	1/16W
R214	NRSA63J-471	M.G.RESISTOR	470	1/16W
R215	NRSA63J-151	M.G.RESISTOR	150	1/16W

Symbol No.	Part No.	Part Name	Description	
R216	NRSA63J-270	M.G.RESISTOR	27	1/16W
R217	NRSA63J-471	M.G.RESISTOR	470	1/16W
R218	NRSA63J-471	M.G.RESISTOR	470	1/16W
R219	NRSA63J-471	M.G.RESISTOR	470	1/16W
R220	NRSA63J-471	M.G.RESISTOR	470	1/16W
R221	NRSA63J-471	M.G.RESISTOR	470	1/16W
R222	NRSA63J-471	M.G.RESISTOR	470	1/16W
R223	NRSA63J-101	M.G.RESISTOR	100	1/16W
R224	NRSA63J-100	M.G.RESISTOR	10	1/16W
R225	NRSA63J-100	M.G.RESISTOR	10	1/16W
R226	NRSA63J-332	M.G.RESISTOR	3.3K	1/16W
R227	NRSA63J-392	M.G.RESISTOR	3.9K	1/16W
R228	NRSA63J-392	M.G.RESISTOR	3.9K	1/16W
R229	NRSA63J-0R0	M.G.RESISTOR	0	1/16W
R230	NRSA63J-102	M.G.RESISTOR	1.0K	1/16W
R231	NRSA63J-104	M.G.RESISTOR	100K	1/16W
R232	NRSA63J-103	M.G.RESISTOR	10K	1/16W
R233	NRSA63J-222	M.G.RESISTOR	2.2K	1/16W
R234	NRSA63J-223	M.G.RESISTOR	22K	1/16W
R235	NRSA63J-102	M.G.RESISTOR	1.0K	1/16W
R236	NRSA63J-0R0	M.G.RESISTOR	0	1/16W
R237	NRSA63J-123	M.G.RESISTOR	12K	1/16W
R238	NRSA63J-472	M.G.RESISTOR	4.7K	1/16W
R239	NRSA63J-102	M.G.RESISTOR	1.0K	1/16W
R240	NRSA63J-101	M.G.RESISTOR	100	1/16W
R241	NRSA63J-101	M.G.RESISTOR	100	1/16W
R242	NRSA63J-101	M.G.RESISTOR	100	1/16W
R243	NRSA63J-102	M.G.RESISTOR	1.0K	1/16W
R244	NRSA63J-101	M.G.RESISTOR	100	1/16W
R245	NRSA63J-102	M.G.RESISTOR	1.0K	1/16W
R246	NRSA63J-102	M.G.RESISTOR	1.0K	1/16W
R247	NRSA63J-105	M.G.RESISTOR	1.0M	1/16W
R248	NRSA63J-101	M.G.RESISTOR	100	1/16W
R249	NRSA63J-102	M.G.RESISTOR	1.0K	1/16W
R250	NRSA63J-0R0	M.G.RESISTOR	0	1/16W
R251	NRSA63J-101	M.G.RESISTOR	100	1/16W
R252	NRSA63J-102	M.G.RESISTOR	1.0K	1/16W
R253	NRSA63J-101	M.G.RESISTOR	100	1/16W
R254	NRSA63J-471	M.G.RESISTOR	470	1/16W
R255	NRSA63J-101	M.G.RESISTOR	100	1/16W
R256	NRSA63J-101	M.G.RESISTOR	100	1/16W
R257	NRSA63J-102	M.G.RESISTOR	1.0K	1/16W
R258	NRSA63J-101	M.G.RESISTOR	100	1/16W
R259	NRSA63J-471	M.G.RESISTOR	470	1/16W
R260	NRSA63J-101	M.G.RESISTOR	100	1/16W
R261	NRSA63J-101	M.G.RESISTOR	100	1/16W
R262	NRSA63J-221	M.G.RESISTOR	220	1/16W
R263	NRSA63J-221	M.G.RESISTOR	220	1/16W
R264	NRSA63J-105	M.G.RESISTOR	1.0M	1/16W
R265	NRSA63J-0R0	M.G.RESISTOR	0	1/16W
R266	NRSA63J-105	M.G.RESISTOR	1.0M	1/16W
R267	NRSA63J-0R0	M.G.RESISTOR	0	1/16W
R268	NRSA63J-102	M.G.RESISTOR	1.0K	1/16W
R269	NRSA63J-333	M.G.RESISTOR	33K	1/16W
R270	NRSA63J-101	M.G.RESISTOR	100	1/16W
R271	NRSA63J-332	M.G.RESISTOR	3.3K	1/16W
R272	NRSA63J-101	M.G.RESISTOR	100	1/16W
R273	NRSA63J-103	M.G.RESISTOR	10K	1/16W
R274	NRSA63J-103	M.G.RESISTOR	10K	1/16W
R275	NRSA63J-102	M.G.RESISTOR	1.0K	1/16W

[RF PROCESS1]

Symbol No.	Part No.	Part Name	Description	
R276	NRSA63J-105	M.G.RESISTOR	1.0M	1/16W
R277	NRSA63J-101	M.G.RESISTOR	100	1/16W
R278	NRSA63J-0R0	M.G.RESISTOR	0	1/16W
R279	NRSA63J-0R0	M.G.RESISTOR	0	1/16W
R280	NRSA63J-0R0	M.G.RESISTOR	0	1/16W
R281	NRSA63J-105	M.G.RESISTOR	1.0M	1/16W
R282	NRSA63J-473	M.G.RESISTOR	47K	1/16W
R283	NRSA63J-473	M.G.RESISTOR	47K	1/16W
R284	NRSA63J-103	M.G.RESISTOR	10K	1/16W
R285	NRSA63J-103	M.G.RESISTOR	10K	1/16W
R286	NRSA63J-103	M.G.RESISTOR	10K	1/16W
R287	NRSA63J-222	M.G.RESISTOR	2.2K	1/16W
R288	NRSA63J-103	M.G.RESISTOR	10K	1/16W
R289	NRSA63J-151	M.G.RESISTOR	150	1/16W
R290	NRSA63J-103	M.G.RESISTOR	10K	1/16W
R291	NRSA63J-223	M.G.RESISTOR	22K	1/16W
R292	NRSA63J-151	M.G.RESISTOR	150	1/16W
R293	NRSA63J-151	M.G.RESISTOR	150	1/16W
R294	NRSA63J-101	M.G.RESISTOR	100	1/16W
R295	NRSA63J-103	M.G.RESISTOR	10K	1/16W
R296	NRSA63J-103	M.G.RESISTOR	10K	1/16W
R297	NRSA63J-103	M.G.RESISTOR	10K	1/16W
R298	NRSA63J-105	M.G.RESISTOR	1.0M	1/16W
R299	NRSA63J-103	M.G.RESISTOR	10K	1/16W
R300	NRSA63J-103	M.G.RESISTOR	10K	1/16W
R301	NRSA63J-101	M.G.RESISTOR	100	1/16W
R302	NRSA63J-103	M.G.RESISTOR	10K	1/16W
R303	NRSA63J-0R0	M.G.RESISTOR	0	1/16W
R304	NRSA63J-470	M.G.RESISTOR	47	1/16W
R305	NRSA63J-101	M.G.RESISTOR	100	1/16W
R306	NRSA63J-101	M.G.RESISTOR	100	1/16W
R307	NRSA63J-224	M.G.RESISTOR	220K	1/16W
R308	NRSA63J-224	M.G.RESISTOR	220K	1/16W
R309	NRSA63J-102	M.G.RESISTOR	1.0K	1/16W
R310	NRSA63J-102	M.G.RESISTOR	1.0K	1/16W
R314	NRSA63J-102	M.G.RESISTOR	1.0K	1/16W
R410	NRSA63J-0R0	M.G.RESISTOR	0	1/16W
R411	NRSA63J-105	M.G.RESISTOR	1.0M	1/16W
R412	NRSA63J-105	M.G.RESISTOR	1.0M	1/16W
R414	NRSA63J-0R0	M.G.RESISTOR	0	1/16W
R424	NRSA63J-102	M.G.RESISTOR	1.0K	1/16W
R426	NRSA63J-102	M.G.RESISTOR	1.0K	1/16W
R427	NRSA63J-0R0	M.G.RESISTOR	0	1/16W
R428	NRSA63J-272	M.G.RESISTOR	2.7K	1/16W
R500	NRSA63J-102	M.G.RESISTOR	1.0K	1/16W
R501	NRSA63J-102	M.G.RESISTOR	1.0K	1/16W
R510	NRSA63J-561	M.G.RESISTOR	560	1/16W
R511	NRSA63J-182	M.G.RESISTOR	1.8K	1/16W
R512	NRSA63J-473	M.G.RESISTOR	47K	1/16W
R513	NRSA63J-473	M.G.RESISTOR	47K	1/16W
R514	NRSA63J-0R0	M.G.RESISTOR	0	1/16W
R515	NRSA63J-104	M.G.RESISTOR	100K	1/16W
R516	NRSA63J-0R0	M.G.RESISTOR	0	1/16W
R517	NRSA63J-0R0	M.G.RESISTOR	0	1/16W
R518	NRSA63J-222	M.G.RESISTOR	2.2K	1/16W
VR1	NVP1416-101	TRIM.RESISTOR	CH BAL	
VR2	NVP1416-501	TRIM.RESISTOR	FIL LEV	
VR3	NVP1416-202	TRIM.RESISTOR	FREQ	

Symbol No.	Part No.	Part Name	Description	
VR4	NVP1416-202	TRIM.RESISTOR	FREQ	
VR6	NVP1415-101	TRIM.RESISTOR	I+D	
VR7	NVP1416-102	TRIM.RESISTOR	ERR RATE	
VR8	NVP1416-102	TRIM.RESISTOR	ERR RATE	
VR9	NVP1415-102	TRIM.RESISTOR	SL LEV	
VR10	NVP1416-201	TRIM.RESISTOR	PLL	
VR11	NVP1415-101	TRIM.RESISTOR	ERR RATE	
C1	NCF31CZ-104	CER.CAPACITOR	0.10	16V
C2	NCF31CZ-104	CER.CAPACITOR	0.10	16V
C3	NEH91CM-226	E.CAPACITOR	22	16V
C4	NCB31HK-103	CER.CAPACITOR	0.010	50V
C5	NCB31HK-103	CER.CAPACITOR	0.010	50V
C6	NCF31CZ-104	CER.CAPACITOR	0.10	16V
C7	NCF31CZ-104	CER.CAPACITOR	0.10	16V
C8	NCB31HK-103	CER.CAPACITOR	0.010	50V
C9	NCB31HK-103	CER.CAPACITOR	0.010	50V
C10	NCB31HK-103	CER.CAPACITOR	0.010	50V
C11	NEH91CM-106	E.CAPACITOR	10	16V
C12	NCT06CH-100	CER.CAPACITOR	10P	50V
C13	NCF31CZ-104	CER.CAPACITOR	0.10	16V
C14	NCB31HK-103	CER.CAPACITOR	0.010	50V
C15	NCF31CZ-104	CER.CAPACITOR	0.10	16V
C16	NCF31CZ-104	CER.CAPACITOR	0.10	16V
C17	NCF31CZ-104	CER.CAPACITOR	0.10	16V
C18	NCT06CH-560	CER.CAPACITOR	56P	50V
C19	NCF31CZ-104	CER.CAPACITOR	0.10	16V
C20	NCB31HK-103	CER.CAPACITOR	0.010	50V
C21	NCB31HK-103	CER.CAPACITOR	0.010	50V
C22	NEH91CM-226	E.CAPACITOR	22	16V
C23	NCF31CZ-104	CER.CAPACITOR	0.10	16V
C24	NCB31HK-222	CER.CAPACITOR	2200P	50V
C25	NCF31CZ-104	CER.CAPACITOR	0.10	16V
C26	NCB31HK-103	CER.CAPACITOR	0.010	50V
C27	NCB31HK-103	CER.CAPACITOR	0.010	50V
C28	NCF31CZ-104	CER.CAPACITOR	0.10	16V
C29	NCB31HK-103	CER.CAPACITOR	0.010	50V
C30	NCB31HK-103	CER.CAPACITOR	0.010	50V
C31	NEH91CM-226	E.CAPACITOR	22	16V
C32	NCF31CZ-104	CER.CAPACITOR	0.10	16V
C33	NCB31HK-103	CER.CAPACITOR	0.010	50V
C34	NCB31HK-103	CER.CAPACITOR	0.010	50V
C35	NEH91CM-226	E.CAPACITOR	22	16V
C36	NCB31HK-102	CER.CAPACITOR	1000P	50V
C38	NCF31CZ-104	CER.CAPACITOR	0.10	16V
C39	NCF31CZ-104	CER.CAPACITOR	0.10	16V
C40	NCF31CZ-104	CER.CAPACITOR	0.10	16V
C41	NCF31CZ-104	CER.CAPACITOR	0.10	16V
C42	NCB31HK-102	CER.CAPACITOR	1000P	50V
C43	NCB31HK-103	CER.CAPACITOR	0.010	50V
C44	NCB31HK-103	CER.CAPACITOR	0.010	50V
C45	NEH91CM-226	E.CAPACITOR	22	16V
C46	NCB31HK-103	CER.CAPACITOR	0.010	50V
C47	NEH91CM-226	E.CAPACITOR	22	16V
C48	NCB31HK-103	CER.CAPACITOR	0.010	50V
C49	NCB31HK-103	CER.CAPACITOR	0.010	50V
C50	NEH91CM-106	E.CAPACITOR	10	16V
C51	NCT06CH-101	CER.CAPACITOR	100P	50V
C52	NCB31HK-102	CER.CAPACITOR	1000P	50V

Symbol No.	Part No.	Part Name	Description	
C53	NCT06CH-101	CER.CAPACITOR	100P	50V
C54	NCB31HK-103	CER.CAPACITOR	0.010	50V
C55	NCB31HK-102	CER.CAPACITOR	1000P	50V
C56	NCF31CZ-104	CER.CAPACITOR	0.10	16V
C57	NCT06CH-561	CER.CAPACITOR	560P	50V
C58	NCB31HK-103	CER.CAPACITOR	0.010	50V
C59	NEH91HM-105	E.CAPACITOR	1.0	50V
C60	NCB31HK-103	CER.CAPACITOR	0.010	50V
C61	NCB31HK-103	CER.CAPACITOR	0.010	50V
C62	NCB31HK-103	CER.CAPACITOR	0.010	50V
C63	NCB31HK-102	CER.CAPACITOR	1000P	50V
C64	NCF31CZ-104	CER.CAPACITOR	0.10	16V
C65	NCF31CZ-104	CER.CAPACITOR	0.10	16V
C66	NCF31CZ-104	CER.CAPACITOR	0.10	16V
C67	NEH91CM-226	E.CAPACITOR	22	16V
C68	NCB31HK-103	CER.CAPACITOR	0.010	50V
C69	NEH91CM-226	E.CAPACITOR	22	16V
C70	NCB31HK-103	CER.CAPACITOR	0.010	50V
C71	NEH91CM-226	E.CAPACITOR	22	16V
C72	NCB31HK-103	CER.CAPACITOR	0.010	50V
C73	NCB31HK-103	CER.CAPACITOR	0.010	50V
C74	NEH91CM-226	E.CAPACITOR	22	16V
C75	NCB31HK-103	CER.CAPACITOR	0.010	50V
C76	NCF31CZ-104	CER.CAPACITOR	0.10	16V
C77	NCF31CZ-104	CER.CAPACITOR	0.10	16V
C78	NCB31HK-103	CER.CAPACITOR	0.010	50V
C79	NEH91CM-106	E.CAPACITOR	10	16V
C80	NEH91CM-226	E.CAPACITOR	22	16V
C81	NCB31HK-103	CER.CAPACITOR	0.010	50V
C82	NCB31HK-103	CER.CAPACITOR	0.010	50V
C83	NEH91CM-106	E.CAPACITOR	10	16V
C84	NEH91CM-226	E.CAPACITOR	22	16V
C85	NCB31HK-103	CER.CAPACITOR	0.010	50V
C86	NCB31HK-103	CER.CAPACITOR	0.010	50V
C87	NCB31HK-103	CER.CAPACITOR	0.010	50V
C88	NCB31HK-103	CER.CAPACITOR	0.010	50V
C89	NCB31HK-103	CER.CAPACITOR	0.010	50V
C90	NCB31HK-103	CER.CAPACITOR	0.010	50V
C91	NCB31HK-103	CER.CAPACITOR	0.010	50V
C92	NCT06CH-100	CER.CAPACITOR	10P	50V
C93	NCB31HK-103	CER.CAPACITOR	0.010	50V
C94	NCB31HK-103	CER.CAPACITOR	0.010	50V
C95	NEH91CM-226	E.CAPACITOR	22	16V
C96	NCB31HK-103	CER.CAPACITOR	0.010	50V
C97	NCB31HK-103	CER.CAPACITOR	0.010	50V
C98	NEH91CM-226	E.CAPACITOR	22	16V
C99	NCB31HK-103	CER.CAPACITOR	0.010	50V
C100	NEH91CM-106	E.CAPACITOR	10	16V
C101	NEH91CM-226	E.CAPACITOR	22	16V
C102	NCB31HK-103	CER.CAPACITOR	0.010	50V
C103	NCB31HK-103	CER.CAPACITOR	0.010	50V
C104	NCF31CZ-104	CER.CAPACITOR	0.10	16V
C105	NCT06CH-100	CER.CAPACITOR	10P	50V
C106	NCT06CH-100	CER.CAPACITOR	10P	50V
C107	NCB31HK-103	CER.CAPACITOR	0.010	50V
C108	NEH91CM-226	E.CAPACITOR	22	16V
C109	NCT06CH-101	CER.CAPACITOR	100P	50V
C110	NEH90JM-107	E.CAPACITOR	100	6.3V
C111	NEH90JM-107	E.CAPACITOR	100	6.3V

Symbol No.	Part No.	Part Name	Description	
C112	NCF31CZ-104	CER.CAPACITOR	0.10	16V
C113	NCB31HK-103	CER.CAPACITOR	0.010	50V
C114	NCB31HK-103	CER.CAPACITOR	0.010	50V
C115	NCF31CZ-104	CER.CAPACITOR	0.10	16V
C116	NCF31CZ-104	CER.CAPACITOR	0.10	16V
C117	NCB31HK-103	CER.CAPACITOR	0.010	50V
C118	NCB31HK-103	CER.CAPACITOR	0.010	50V
C119	NCF31CZ-104	CER.CAPACITOR	0.10	16V
C120	NCB31HK-103	CER.CAPACITOR	0.010	50V
C121	NEH91CM-226	E.CAPACITOR	22	16V
C122	NCB31HK-103	CER.CAPACITOR	0.010	50V
C123	NEH91CM-226	E.CAPACITOR	22	16V
C124	NCB31HK-103	CER.CAPACITOR	0.010	50V
C125	NCT06CH-220	CER.CAPACITOR	22P	50V
C126	NCT06CH-220	CER.CAPACITOR	22P	50V
C127	NCF31CZ-104	CER.CAPACITOR	0.10	16V
C128	NCB31HK-103	CER.CAPACITOR	0.010	50V
C129	NCB31HK-103	CER.CAPACITOR	0.010	50V
C130	NEH91CM-106	E.CAPACITOR	10	16V
C131	NCT06CH-101	CER.CAPACITOR	100P	50V
C132	NCT06CH-101	CER.CAPACITOR	100P	50V
C133	NCT06CH-101	CER.CAPACITOR	100P	50V
C134	NCT06CH-101	CER.CAPACITOR	100P	50V
C135	NCT06CH-101	CER.CAPACITOR	100P	50V
C136	NCB31HK-102	CER.CAPACITOR	1000P	50V
C137	NCB31HK-103	CER.CAPACITOR	0.010	50V
C138	NCB31HK-102	CER.CAPACITOR	1000P	50V
C139	NCB31HK-103	CER.CAPACITOR	0.010	50V
C140	NEH91CM-226	E.CAPACITOR	22	16V
C141	NCB31HK-103	CER.CAPACITOR	0.010	50V
C142	NCB31HK-103	CER.CAPACITOR	0.010	50V
C143	NCB31HK-103	CER.CAPACITOR	0.010	50V
C144	NCB31HK-103	CER.CAPACITOR	0.010	50V
C145	NCB31HK-103	CER.CAPACITOR	0.010	50V
C146	NCB31HK-103	CER.CAPACITOR	0.010	50V
C147	NCB31HK-103	CER.CAPACITOR	0.010	50V
C148	NCB31HK-103	CER.CAPACITOR	0.010	50V
C149	NCB31HK-103	CER.CAPACITOR	0.010	50V
C150	NEH90JM-107	E.CAPACITOR	100	6.3V
C151	NEH90JM-107	E.CAPACITOR	100	6.3V
C152	NEH91HM-105	E.CAPACITOR	1.0	50V
C153	NEF11EM-474	TAN.CAPACITOR	0.47	25V
C154	NCB31HK-103	CER.CAPACITOR	0.010	50V
C155	NCB31HK-103	CER.CAPACITOR	0.010	50V
C156	NCB31HK-103	CER.CAPACITOR	0.010	50V
C157	NCB31HK-103	CER.CAPACITOR	0.010	50V
C158	NCT06CH-330	CER.CAPACITOR	33P	50V
C159	NCF31CZ-104	CER.CAPACITOR	0.10	16V
C160	NCF31CZ-104	CER.CAPACITOR	0.10	16V
C161	NCB31HK-103	CER.CAPACITOR	0.010	50V
C162	NCB31HK-103	CER.CAPACITOR	0.010	50V
C163	NCB31HK-103	CER.CAPACITOR	0.010	50V
C164	NCB31HK-103	CER.CAPACITOR	0.010	50V
C165	NCB31HK-103	CER.CAPACITOR	0.010	50V
C166	NCB31HK-103	CER.CAPACITOR	0.010	50V
C167	NCB31HK-103	CER.CAPACITOR	0.010	50V
C168	NCB31HK-103	CER.CAPACITOR	0.010	50V
C169	NCT06CH-101	CER.CAPACITOR	100P	50V
C170	NCT06CH-101	CER.CAPACITOR	100P	50V
C171	NEH91EM-475	E.CAPACITOR	4.7	25V

[RF PROCESS1]

Symbol No.	Part No.	Part Name	Description
C179	NCB31HK-103	CER.CAPACITOR	0.010 50V
C200	NCT06CH-101	CER.CAPACITOR	100P 50V
C201	NCB31HK-103	CER.CAPACITOR	0.010 50V
C202	NCB31HK-103	CER.CAPACITOR	0.010 50V
C203	NCB31HK-103	CER.CAPACITOR	0.010 50V
C204	NCB31HK-103	CER.CAPACITOR	0.010 50V
C205	NCF31CZ-104	CER.CAPACITOR	0.10 16V
C206	NCF31CZ-104	CER.CAPACITOR	0.10 16V
C225	NCF31CZ-104	CER.CAPACITOR	0.10 16V
C227	NCB31HK-103	CER.CAPACITOR	0.010 50V
C230	NCB31HK-102	CER.CAPACITOR	1000P 50V
C250	NCT06CH-221	CER.CAPACITOR	220P 50V
C256	NCB31HK-103	CER.CAPACITOR	0.010 50V
VC1	NAT3112-200	TRIM.CAPACITOR	20P
L1	PU58201-100	COIL	10μ
L2	PU58201-1R0	COIL	1μ
L3	PU58201-R47	CHIP COIL	0.47μ
X1	PGZ02200-001	CRYSTAL	4.9152MHz
CN1	PGZ02149-102	CONNECTOR	2PIN
CN2	PGZ02142-100	CONNECTOR	100PIN
CN5	PGZ02149-106	CONNECTOR	6PIN
TP1	SCV1880-001	TEST POINT	
TP2	SCV1880-001	TEST POINT	
TP3	SCV1880-001	TEST POINT	
TP4	SCV1880-001	TEST POINT	
TP5	SCV1880-001	TEST POINT	
TP6	SCV1880-001	TEST POINT	
TP7	SCV1880-001	TEST POINT	
TP8	SCV1880-001	TEST POINT	
TP9	SCV1880-001	TEST POINT	
TP10	SCV1880-001	TEST POINT	
TP11	SCV1880-001	TEST POINT	
TP12	SCV1880-001	TEST POINT	
TP13	SCV1880-001	TEST POINT	
TP14	SCV1880-001	TEST POINT	
TP15	SCV1880-001	TEST POINT	
TP16	SCV1880-001	TEST POINT	
TP17	SCV1880-001	TEST POINT	
TP18	SCV1880-001	TEST POINT	
TP19	SCV1880-001	TEST POINT	
TP20	SSV1096-001	TEST POINT	
TP21	SSV1096-001	TEST POINT	
TP22	SCV1880-001	TEST POINT	
TP23	SCV1880-001	TEST POINT	
TP24	SCV1880-001	TEST POINT	
TP25	SSV1096-001	TEST POINT	
TP26	SCV1880-001	TEST POINT	
TP27	SSV1096-001	TEST POINT	
TP28	SCV1880-001	TEST POINT	
TP29	SCV1880-001	TEST POINT	
TP30	SCV1880-001	TEST POINT	

Symbol No.	Part No.	Part Name	Description
TP31	SCV1880-001	TEST POINT	
TP32	SCV1880-001	TEST POINT	
TP33	SCV1880-001	TEST POINT	
TP34	SCV1880-001	TEST POINT	
TP35	SCV1880-001	TEST POINT	
TP36	SCV1880-001	TEST POINT	
TP37	SCV1880-001	TEST POINT	
TP38	SCV1880-001	TEST POINT	
TP39	SCV1880-001	TEST POINT	
TP40	SCV1880-001	TEST POINT	
TP41	SCV1880-001	TEST POINT	
TP42	SCV1880-001	TEST POINT	
TP43	SSV1096-001	TEST POINT	
TP44	SSV1096-001	TEST POINT	
TP45	SCV1880-001	TEST POINT	
TP46	SCV1880-001	TEST POINT	
TP49	SCV1880-001	TEST POINT	
TP50	SSV1096-001	TEST POINT	
TP52	SCV1880-001	TEST POINT	
TP53	SCV1880-001	TEST POINT	
FL1	PGZ02179	DELAY LINE	
FL2	PGZ02180	DELAY LINE	
FL3	PGZ02199	LPF	
K1	PGZ00627	FERRATE BEADS	
K2	PGZ00627	FERRATE BEADS	
K3	PGZ00627	FERRATE BEADS	
K4	PGZ00627	FERRATE BEADS	
K5	PGZ00627	FERRATE BEADS	
K6	PGZ00627	FERRATE BEADS	
K7	PGZ00627	FERRATE BEADS	
K8	PGZ00627	FERRATE BEADS	
K9	PGZ00627	FERRATE BEADS	
K10	PGZ00627	FERRATE BEADS	
K11	PGZ00627	FERRATE BEADS	
K12	PGZ00627	FERRATE BEADS	
K13	PGZ00627	FERRATE BEADS	
K14	PGZ00627	FERRATE BEADS	
K15	PGZ00627	FERRATE BEADS	
K16	PGZ00627	FERRATE BEADS	
K17	PGZ00627	FERRATE BEADS	
K18	PGZ00627	FERRATE BEADS	
K19	PGZ00627	FERRATE BEADS	
K20	PGZ00627	FERRATE BEADS	
K21	PGZ00627	FERRATE BEADS	
K22	PGZ00627	FERRATE BEADS	
K23	PGZ00627	FERRATE BEADS	
K24	PGZ00627	FERRATE BEADS	
K25	PGZ00627	FERRATE BEADS	
K28	PGZ00627	FERRATE BEADS	
K29	PGZ00627	FERRATE BEADS	
K30	PGZ00627	FERRATE BEADS	
K32	PGZ00627	FERRATE BEADS	
LF1	PGZ02201	FILTER	
T1	PGZ02198-02	COIL	

6.5 PV PROCESS BOARD ASSEMBLY LIST [1][3]

SLK1021-A4A [1][3]□□□□□□□

Symbol No.	Part No.	Part Name	Description
TB1	PGZ02228	EARTH LUG	
TB2	PGZ02228	EARTH LUG	
TB3	PGZ02228	EARTH LUG	
TB4	PGZ02228	EARTH LUG	
SL1	PRD20531	SHIELD CASE	
SC1	DPSP2606Z	SCREW	M2.6×6
SP1	PGZ01128-02	SPACER	

Symbol No.	Part No.	Part Name	Description
IC1	DS90C032TM	I.C.(M)	NS
IC2	DS90C032TM	I.C.(M)	NS
IC3	JCL0028	I.C.(M)	JVC
IC4	UPD489001GC	I.C.(M)	NEC
IC5	UPD489001GC	I.C.(M)	NEC
IC6	UPD489001GC	I.C.(M)	NEC
IC7	UPD489001GC	I.C.(M)	NEC
IC8	S-81224PG-PX-X	I.C.(M)	SEIKO
IC9	MN67371F	I.C.(M)	MATSUSHITA
IC10	S-81224PG-PX-X	I.C.(M)	SEIKO
IC11	MN67371F	I.C.(M)	MATSUSHITA
IC12	L7A1433	I.C.(M)	LSI LOGIC
IC13	UPD42S4260ALG5	I.C.(M)	NEC
IC14	L7A1433	I.C.(M)	LSI LOGIC
IC15	UPD42S4260ALG5	I.C.(M)	NEC
IC16	JCL0029	I.C.(M)	JVC
IC17	TC528267FT-70	I.C.(M)	TOSHIBA
IC18	SN74CBT3245PW	I.C.(M)	TEXAS
IC19	TC528267FT-70	I.C.(M)	TOSHIBA
IC20	SN74CBT3245PW	I.C.(M)	TEXAS
IC21	DS90C031TM	I.C.(M)	NS
IC22	TC74HCT245AF	I.C.(M)	TOSHIBA
IC23	S-81240PG-PJ-X	I.C.(M)	SEIKO
IC24	DS90C032TM	I.C.(M)	NS
IC25	TC74VHC125F	I.C.(M)	TOSHIBA
IC26	74AC86SJ	I.C.(M)	NS
IC27	74AC175SJ	I.C.(M)	NS
IC28	EPM032VT-20-001	I.C.(M)	ALTERA
IC29	TC74VHC126F	I.C.(M)	TOSHIBA
IC30	TC74VHC245F	I.C.(M)	TOSHIBA
IC31	JCL0030	I.C.(M)	JVC
IC32	TC528267FT-70	I.C.(M)	TOSHIBA
IC33	SN74CBT3245PW	I.C.(M)	TEXAS
IC34	TC74VHC245F	I.C.(M)	TOSHIBA
IC35	TC528267FT-70	I.C.(M)	TOSHIBA
IC36	SN74CBT3245PW	I.C.(M)	TEXAS
IC37	TC74VHC245F	I.C.(M)	TOSHIBA
IC38	TC74HCT245AF	I.C.(M)	TOSHIBA
IC39	TC74HCT245AF	I.C.(M)	TOSHIBA
IC40	L7A1433	I.C.(M)	LSI LOGIC
IC41	UPD42S4260ALG5	I.C.(M)	NEC
IC42	L7A1433	I.C.(M)	LSI LOGIC
IC43	UPD42S4260ALG5	I.C.(M)	NEC
IC44	MN67371F	I.C.(M)	MATSUSHITA
IC45	S-81224PG-PX-X	I.C.(M)	SEIKO
IC46	MN67371F	I.C.(M)	MATSUSHITA
IC47	S-81224PG-PX-X	I.C.(M)	SEIKO
IC48	TC74VHC74F	I.C.(M)	TOSHIBA
IC49	DS90C032TM	I.C.(M)	NS
IC50	DS90C032TM	I.C.(M)	NS
IC51	TC74VHC244F	I.C.(M)	TOSHIBA
IC52	TC74VHC244F	I.C.(M)	TOSHIBA
IC53	74ACT241SJ	I.C.(M)	NS
IC54	TC7WH74FU	I.C.(M)	TOSHIBA
IC55	JCL0028	I.C.(M)	JVC
IC56	UPD489001GC	I.C.(M)	NEC
IC57	UPD489001GC	I.C.(M)	NEC
IC58	UPD489001GC	I.C.(M)	NEC
IC59	UPD489001GC	I.C.(M)	NEC
IC60	DS90C031TM	I.C.(M)	NS

[PV PROCESS]

Symbol No.	Part No.	Part Name	Description
IC61	DS90C031TM	I.C.(M)	NS
IC62	TD74BC244F	I.C.(M)	TOSHIBA
IC63	DS90C031TM	I.C.(M)	NS
IC64	TC74VHC125F	I.C.(M)	TOSHIBA
IC301	TC74VHC541F	I.C.(M)	TOSHIBA
IC302	TC74VHC00F	I.C.(M)	TOSHIBA
IC303	TC7SH08F	I.C.(M)	TOSHIBA
IC304	M65401FP	I.C.(M)	MITSUBISHI
IC305	M65401FP	I.C.(M)	MITSUBISHI
IC306	S-81224PG-PX-X	I.C.(M)	SEIKO
IC307	TC74HC04AF	I.C.(M)	TOSHIBA
IC308	TC74HC590AF	I.C.(M)	TOSHIBA
IC309	TC74HC11AF	I.C.(M)	TOSHIBA
IC310	TC74HC161AF	I.C.(M)	TOSHIBA
IC311	TC74HC107AF	I.C.(M)	TOSHIBA
IC313	M65401FP	I.C.(M)	MITSUBISHI
IC314	M52660FP	I.C.(M)	MITSUBISHI
IC315	TC7SH08F	I.C.(M)	TOSHIBA
IC316	M65401FP	I.C.(M)	MITSUBISHI
IC317	S-81224PG-PX-X	I.C.(M)	SEIKO
IC318	TC7SH08F	I.C.(M)	TOSHIBA
IC319	TC7SH08F	I.C.(M)	TOSHIBA
IC401	UPD78P58YGC-101	I.C.(M)	NEC
IC402	UPD78P58YGC-001	I.C.(M)	NEC
IC403	TC74HCT541AF	I.C.(M)	TOSHIBA
IC404	TC7S04F	I.C.(M)	TOSHIBA
IC405	TC7S04F	I.C.(M)	TOSHIBA
IC406	TC7W04F	I.C.(M)	TOSHIBA
IC407	TC74HCT541AF	I.C.(M)	TOSHIBA
IC408	TC4053BF	I.C.(M)	TOSHIBA
IC409	TC4053BF	I.C.(M)	TOSHIBA
IC410	TC4053BF	I.C.(M)	TOSHIBA
IC411	TC4053BF	I.C.(M)	TOSHIBA
IC412	TC4053BF	I.C.(M)	TOSHIBA
IC413	TC7W126FU	I.C.(M)	TOSHIBA
IC414	SN74CBT3384PW	I.C.(M)	TEXAS
IC415	SN74CBT3384PW	I.C.(M)	TEXAS
IC416	TC74VHC244F	I.C.(M)	TOSHIBA
IC417	TC74VHC244F	I.C.(M)	TOSHIBA
IC418	TC74VHC244F	I.C.(M)	TOSHIBA
IC419	SN74CBT3245PW	I.C.(M)	TEXAS
IC420	SN74CBT3384PW	I.C.(M)	TEXAS
IC421	SN74CBT3384PW	I.C.(M)	TEXAS
Q1	DTC124EU	TRANSISTOR	ROHM
R1	NRSA63J-101	M.G.RESISTOR	100 1/16W
R2	NRSA63J-101	M.G.RESISTOR	100 1/16W
R3	NRSA63J-101	M.G.RESISTOR	100 1/16W
R4	NRSA63J-101	M.G.RESISTOR	100 1/16W
R5	NRSA63J-101	M.G.RESISTOR	100 1/16W
R6	NRSA63J-101	M.G.RESISTOR	100 1/16W
R7	NRSA63J-101	M.G.RESISTOR	100 1/16W
R8	NRSA63J-101	M.G.RESISTOR	100 1/16W
R9	NRSA63J-101	M.G.RESISTOR	100 1/16W
R10	NRSA63J-101	M.G.RESISTOR	100 1/16W
R11	NRSA63J-101	M.G.RESISTOR	100 1/16W
R12	NRSA63J-101	M.G.RESISTOR	100 1/16W

Symbol No.	Part No.	Part Name	Description
R13	NRSA63J-101	M.G.RESISTOR	100 1/16W
R14	NRSA63J-101	M.G.RESISTOR	100 1/16W
R15	NRSA63J-101	M.G.RESISTOR	100 1/16W
R16	NRSA63J-101	M.G.RESISTOR	100 1/16W
R17	NRSA63J-101	M.G.RESISTOR	100 1/16W
R18	NRSA63J-101	M.G.RESISTOR	100 1/16W
R19	NRSA63J-101	M.G.RESISTOR	100 1/16W
R20	NRSA63J-101	M.G.RESISTOR	100 1/16W
R21	NRSA63J-101	M.G.RESISTOR	100 1/16W
R22	NRSA63J-101	M.G.RESISTOR	100 1/16W
R23	NRSA63J-101	M.G.RESISTOR	100 1/16W
R24	NRSA63J-101	M.G.RESISTOR	100 1/16W
R32	NRSA63J-105	M.G.RESISTOR	1.0M 1/16W
R33	NRSA63J-103	M.G.RESISTOR	10K 1/16W
R34	NRSA63J-101	M.G.RESISTOR	100 1/16W
R35	NRSA63J-101	M.G.RESISTOR	100 1/16W
R36	NRSA63J-101	M.G.RESISTOR	100 1/16W
R37	NRSA63J-101	M.G.RESISTOR	100 1/16W
R38	NRSA63J-101	M.G.RESISTOR	100 1/16W
R39	NRSA63J-101	M.G.RESISTOR	100 1/16W
R40	NRSA63J-221	M.G.RESISTOR	220 1/16W
R41	NRSA63J-221	M.G.RESISTOR	220 1/16W
R42	NRSA63J-221	M.G.RESISTOR	220 1/16W
R43	NRSA63J-221	M.G.RESISTOR	220 1/16W
R44	NRSA63J-102	M.G.RESISTOR	1.0K 1/16W
R45	NRSA63J-221	M.G.RESISTOR	220 1/16W
R46	NRSA63J-221	M.G.RESISTOR	220 1/16W
R47	NRSA63J-101	M.G.RESISTOR	100 1/16W
R48	NRSA63J-101	M.G.RESISTOR	100 1/16W
R49	NRSA63J-101	M.G.RESISTOR	100 1/16W
R50	NRSA63J-101	M.G.RESISTOR	100 1/16W
R51	NRSA63J-101	M.G.RESISTOR	100 1/16W
R52	NRSA63J-101	M.G.RESISTOR	100 1/16W
R53	NRSA63J-101	M.G.RESISTOR	100 1/16W
R54	NRSA63J-101	M.G.RESISTOR	100 1/16W
R55	NRSA63J-101	M.G.RESISTOR	100 1/16W
R56	NRSA63J-101	M.G.RESISTOR	100 1/16W
R57	NRSA63J-101	M.G.RESISTOR	100 1/16W
R58	NRSA63J-101	M.G.RESISTOR	100 1/16W
R59	NRSA63J-102	M.G.RESISTOR	1.0K 1/16W
R60	NRSA63J-104	M.G.RESISTOR	100K 1/16W
R61	NRSA63J-102	M.G.RESISTOR	1.0K 1/16W
R62	NRSA63J-104	M.G.RESISTOR	100K 1/16W
R63	NRSA63J-102	M.G.RESISTOR	1.0K 1/16W
R64	NRSA63J-104	M.G.RESISTOR	100K 1/16W
R65	NRSA63J-102	M.G.RESISTOR	1.0K 1/16W
R66	NRSA63J-104	M.G.RESISTOR	100K 1/16W
R67	NRSA63J-102	M.G.RESISTOR	1.0K 1/16W
R68	NRSA63J-104	M.G.RESISTOR	100K 1/16W
R69	NRSA63J-102	M.G.RESISTOR	1.0K 1/16W
R70	NRSA63J-104	M.G.RESISTOR	100K 1/16W
R71	NRSA63J-102	M.G.RESISTOR	1.0K 1/16W
R72	NRSA63J-104	M.G.RESISTOR	100K 1/16W
R74	NRSA63J-102	M.G.RESISTOR	1.0K 1/16W
R75	NRSA63J-221	M.G.RESISTOR	220 1/16W
R76	NRSA63J-221	M.G.RESISTOR	220 1/16W
R77	NRSA63J-102	M.G.RESISTOR	1.0K 1/16W
R78	NRSA63J-102	M.G.RESISTOR	1.0K 1/16W
R79	NRSA63J-102	M.G.RESISTOR	1.0K 1/16W

Symbol No.	Part No.	Part Name	Description	
R80	NRSA63J-102	M.G.RESISTOR	1.0K	1/16W
R81	NRSA63J-102	M.G.RESISTOR	1.0K	1/16W
R82	NRSA63J-102	M.G.RESISTOR	1.0K	1/16W
R83	NRSA63J-102	M.G.RESISTOR	1.0K	1/16W
R84	NRSA63J-102	M.G.RESISTOR	1.0K	1/16W
R85	NRSA63J-102	M.G.RESISTOR	1.0K	1/16W
R86	NRSA63J-102	M.G.RESISTOR	1.0K	1/16W
R87	NRSA63J-101	M.G.RESISTOR	100	1/16W
R88	NRSA63J-101	M.G.RESISTOR	100	1/16W
R89	NRSA63J-101	M.G.RESISTOR	100	1/16W
R90	NRSA63J-101	M.G.RESISTOR	100	1/16W
R91	NRSA63J-101	M.G.RESISTOR	100	1/16W
R92	NRSA63J-392	M.G.RESISTOR	3.9K	1/16W
R93	NRSA63J-101	M.G.RESISTOR	100	1/16W
R94	NRSA63J-101	M.G.RESISTOR	100	1/16W
R95	NRSA63J-101	M.G.RESISTOR	100	1/16W
R96	NRSA63J-101	M.G.RESISTOR	100	1/16W
R97	NRSA63J-101	M.G.RESISTOR	100	1/16W
R98	NRSA63J-101	M.G.RESISTOR	100	1/16W
R99	NRSA63J-101	M.G.RESISTOR	100	1/16W
R102	NRSA63J-101	M.G.RESISTOR	100	1/16W
R103	NRSA63J-101	M.G.RESISTOR	100	1/16W
R104	NRSA63J-101	M.G.RESISTOR	100	1/16W
R107	NRSA63J-101	M.G.RESISTOR	100	1/16W
R110	NRSA63J-101	M.G.RESISTOR	100	1/16W
R111	NRSA63J-101	M.G.RESISTOR	100	1/16W
R112	NRSA63J-101	M.G.RESISTOR	100	1/16W
R115	NRSA63J-101	M.G.RESISTOR	100	1/16W
R116	NRSA63J-101	M.G.RESISTOR	100	1/16W
R117	NRSA63J-0R0	M.G.RESISTOR	0	1/16W
R120	NRSA63J-330	M.G.RESISTOR	33	1/16W
R121	NRSA63J-330	M.G.RESISTOR	33	1/16W
R122	NRSA63J-330	M.G.RESISTOR	33	1/16W
R123	NRSA63J-330	M.G.RESISTOR	33	1/16W
R124	NRSA63J-330	M.G.RESISTOR	33	1/16W
R125	NRSA63J-330	M.G.RESISTOR	33	1/16W
R126	NRSA63J-330	M.G.RESISTOR	33	1/16W
R127	NRSA63J-330	M.G.RESISTOR	33	1/16W
R128	NRSA63J-330	M.G.RESISTOR	33	1/16W
R129	NRSA63J-330	M.G.RESISTOR	33	1/16W
R130	NRSA63J-330	M.G.RESISTOR	33	1/16W
R131	NRSA63J-330	M.G.RESISTOR	33	1/16W
R132	NRSA63J-330	M.G.RESISTOR	33	1/16W
R133	NRSA63J-330	M.G.RESISTOR	33	1/16W
R134	NRSA63J-330	M.G.RESISTOR	33	1/16W
R135	NRSA63J-101	M.G.RESISTOR	100	1/16W
R136	NRSA63J-101	M.G.RESISTOR	100	1/16W
R137	NRSA63J-101	M.G.RESISTOR	100	1/16W
R138	NRSA63J-101	M.G.RESISTOR	100	1/16W
R139	NRSA63J-101	M.G.RESISTOR	100	1/16W
R140	NRSA63J-101	M.G.RESISTOR	100	1/16W
R141	NRSA63J-101	M.G.RESISTOR	100	1/16W
R142	NRSA63J-101	M.G.RESISTOR	100	1/16W
R143	NRSA63J-101	M.G.RESISTOR	100	1/16W
R144	NRSA63J-101	M.G.RESISTOR	100	1/16W
R145	NRSA63J-101	M.G.RESISTOR	100	1/16W
R146	NRSA63J-101	M.G.RESISTOR	100	1/16W
R147	NRSA63J-101	M.G.RESISTOR	100	1/16W
R148	NRSA63J-101	M.G.RESISTOR	100	1/16W

Symbol No.	Part No.	Part Name	Description	
R149	NRSA63J-101	M.G.RESISTOR	100	1/16W
R150	NRSA63J-101	M.G.RESISTOR	100	1/16W
R152	NRSA63J-101	M.G.RESISTOR	100	1/16W
R153	NRSA63J-101	M.G.RESISTOR	100	1/16W
R154	NRSA63J-101	M.G.RESISTOR	100	1/16W
R155	NRSA63J-101	M.G.RESISTOR	100	1/16W
R158	NRSA63J-101	M.G.RESISTOR	100	1/16W
R159	NRSA63J-101	M.G.RESISTOR	100	1/16W
R176	NRSA63J-330	M.G.RESISTOR	33	1/16W
R180	NRSA63J-330	M.G.RESISTOR	33	1/16W
R182	NRSA63J-101	M.G.RESISTOR	100	1/16W
R183	NRSA63J-101	M.G.RESISTOR	100	1/16W
R302	NRSA63J-104	M.G.RESISTOR	100K	1/16W
R303	NRSA63J-470	M.G.RESISTOR	47	1/16W
R304	NRSA63J-470	M.G.RESISTOR	47	1/16W
R305	NRSA63J-470	M.G.RESISTOR	47	1/16W
R306	NRSA63J-470	M.G.RESISTOR	47	1/16W
R307	NRSA63J-470	M.G.RESISTOR	47	1/16W
R308	NRSA63J-470	M.G.RESISTOR	47	1/16W
R309	NRSA63J-470	M.G.RESISTOR	47	1/16W
R310	NRSA63J-470	M.G.RESISTOR	47	1/16W
R311	NRSA63J-470	M.G.RESISTOR	47	1/16W
R312	NRSA63J-103	M.G.RESISTOR	10K	1/16W
R313	NRSA63J-103	M.G.RESISTOR	10K	1/16W
R315	NRSA63J-222	M.G.RESISTOR	2.2K	1/16W
R316	NRSA63J-561	M.G.RESISTOR	560	1/16W
R317	NRSA63J-391	M.G.RESISTOR	390	1/16W
R318	NRSA63J-823	M.G.RESISTOR	82K	1/16W
R319	NRSA63J-392	M.G.RESISTOR	3.9K	1/16W
R320	NRSA63J-333	M.G.RESISTOR	33K	1/16W
R321	NRSA63J-103	M.G.RESISTOR	10K	1/16W
R322	NRSA63J-103	M.G.RESISTOR	10K	1/16W
R323	NRSA63J-101	M.G.RESISTOR	100	1/16W
R324	NRSA63J-101	M.G.RESISTOR	100	1/16W
R325	NRSA63J-101	M.G.RESISTOR	100	1/16W
R326	NRSA63J-101	M.G.RESISTOR	100	1/16W
R327	NRSA63J-101	M.G.RESISTOR	100	1/16W
R328	NRSA63J-101	M.G.RESISTOR	100	1/16W
R329	NRSA63J-103	M.G.RESISTOR	10K	1/16W
R330	NRSA63J-154	M.G.RESISTOR	150K	1/16W
R331	NRSA63J-154	M.G.RESISTOR	150K	1/16W
R332	NRSA63J-272	M.G.RESISTOR	2.7K	1/16W
R333	NRSA63J-0R0	M.G.RESISTOR	0	1/16W
R401	NRSA63J-105	M.G.RESISTOR	1.0M	1/16W
R402	NRSA63J-472	M.G.RESISTOR	4.7K	1/16W
R403	NRSA63J-0R0	M.G.RESISTOR	0	1/16W
R404	NRSA63J-0R0	M.G.RESISTOR	0	1/16W
R405	NRSA63J-0R0	M.G.RESISTOR	0	1/16W
R406	NRSA63J-562	M.G.RESISTOR	5.6K	1/16W
R407	NRSA63J-562	M.G.RESISTOR	5.6K	1/16W
R408	NRSA63J-562	M.G.RESISTOR	5.6K	1/16W
R409	NRSA63J-562	M.G.RESISTOR	5.6K	1/16W
R410	NRSA63J-562	M.G.RESISTOR	5.6K	1/16W
R411	NRSA63J-562	M.G.RESISTOR	5.6K	1/16W
R412	NRSA63J-562	M.G.RESISTOR	5.6K	1/16W
R413	NRSA63J-562	M.G.RESISTOR	5.6K	1/16W
R414	NRSA63J-562	M.G.RESISTOR	5.6K	1/16W
R415	NRSA63J-562	M.G.RESISTOR	5.6K	1/16W
R416	NRSA63J-562	M.G.RESISTOR	5.6K	1/16W
R417	NRSA63J-562	M.G.RESISTOR	5.6K	1/16W

[PV PROCESS]

Symbol No.	Part No.	Part Name	Description	
R418	NRSA63J-562	M.G.RESISTOR	5.6K	1/16W
R419	NRSA63J-562	M.G.RESISTOR	5.6K	1/16W
R420	NRSA63J-562	M.G.RESISTOR	5.6K	1/16W
R421	NRSA63J-562	M.G.RESISTOR	5.6K	1/16W
R422	NRSA63J-562	M.G.RESISTOR	5.6K	1/16W
R423	NRSA63J-562	M.G.RESISTOR	5.6K	1/16W
R424	NRSA63J-562	M.G.RESISTOR	5.6K	1/16W
R425	NRSA63J-562	M.G.RESISTOR	5.6K	1/16W
R426	NRSA63J-562	M.G.RESISTOR	5.6K	1/16W
R427	NRSA63J-562	M.G.RESISTOR	5.6K	1/16W
R429	NRSA63J-562	M.G.RESISTOR	5.6K	1/16W
C1	NEH91CM-106	E.CAPACITOR	10	16V
C2	NCB31EK-223	CER.CAPACITOR	0.022	25V
C3	NCB31EK-223	CER.CAPACITOR	0.022	25V
C4	NCB31EK-223	CER.CAPACITOR	0.022	25V
C5	NCB31EK-223	CER.CAPACITOR	0.022	25V
C6	NCB31EK-223	CER.CAPACITOR	0.022	25V
C7	NCB31EK-223	CER.CAPACITOR	0.022	25V
C8	NCB31EK-223	CER.CAPACITOR	0.022	25V
C9	NCB31EK-223	CER.CAPACITOR	0.022	25V
C10	NCB31EK-223	CER.CAPACITOR	0.022	25V
C11	NCB31EK-223	CER.CAPACITOR	0.022	25V
C12	NCB31EK-223	CER.CAPACITOR	0.022	25V
C13	NCF31CZ-334	CER.CAPACITOR	0.33	16V
C14	NCF31CZ-104	CER.CAPACITOR	0.10	16V
C15	NCB31EK-223	CER.CAPACITOR	0.022	25V
C16	NCB31EK-223	CER.CAPACITOR	0.022	25V
C17	NCF31CZ-334	CER.CAPACITOR	0.33	16V
C18	NCF31CZ-104	CER.CAPACITOR	0.10	16V
C19	NCB31EK-223	CER.CAPACITOR	0.022	25V
C20	NCB31EK-223	CER.CAPACITOR	0.022	25V
C21	NCB31EK-223	CER.CAPACITOR	0.022	25V
C22	NCB31EK-223	CER.CAPACITOR	0.022	25V
C23	NCB31EK-223	CER.CAPACITOR	0.022	25V
C24	NCB31EK-223	CER.CAPACITOR	0.022	25V
C25	NCB31EK-223	CER.CAPACITOR	0.022	25V
C26	NCB31EK-223	CER.CAPACITOR	0.022	25V
C27	NCB31EK-223	CER.CAPACITOR	0.022	25V
C28	NCB31EK-223	CER.CAPACITOR	0.022	25V
C29	NCB31EK-223	CER.CAPACITOR	0.022	25V
C30	NCB31EK-223	CER.CAPACITOR	0.022	25V
C31	NCB31EK-223	CER.CAPACITOR	0.022	25V
C32	NCB31HK-102	CER.CAPACITOR	1000P	50V
C33	NCT06CH-7R0	CER.CAPACITOR	7.0P	50V
C34	NCT06CH-180	CER.CAPACITOR	18P	50V
C37	NCB31EK-223	CER.CAPACITOR	0.022	25V
C38	NCB31EK-223	CER.CAPACITOR	0.022	25V
C39	NCB31EK-223	CER.CAPACITOR	0.022	25V
C40	NCB31EK-223	CER.CAPACITOR	0.022	25V
C41	NCB31EK-223	CER.CAPACITOR	0.022	25V
C42	NEH91CM-106	E.CAPACITOR	10	16V
C43	NCB31EK-223	CER.CAPACITOR	0.022	25V
C44	NCF31CZ-334	CER.CAPACITOR	0.33	16V
C45	NCF31CZ-104	CER.CAPACITOR	0.10	16V
C46	NEH91CM-106	E.CAPACITOR	10	16V
C47	NCB31EK-223	CER.CAPACITOR	0.022	25V
C48	NCB31EK-223	CER.CAPACITOR	0.022	25V
C49	NCB31EK-223	CER.CAPACITOR	0.022	25V

Symbol No.	Part No.	Part Name	Description	
C50	NCB31EK-223	CER.CAPACITOR	0.022	25V
C51	NCB31EK-223	CER.CAPACITOR	0.022	25V
C52	NCB31EK-223	CER.CAPACITOR	0.022	25V
C53	NCB31EK-223	CER.CAPACITOR	0.022	25V
C54	NCB31EK-223	CER.CAPACITOR	0.022	25V
C55	NCB31EK-223	CER.CAPACITOR	0.022	25V
C56	NCB31EK-223	CER.CAPACITOR	0.022	25V
C57	NCB31EK-223	CER.CAPACITOR	0.022	25V
C58	NCB31EK-223	CER.CAPACITOR	0.022	25V
C59	NCB31EK-223	CER.CAPACITOR	0.022	25V
C60	NCB31EK-223	CER.CAPACITOR	0.022	25V
C61	NCB31EK-223	CER.CAPACITOR	0.022	25V
C62	NCB31EK-223	CER.CAPACITOR	0.022	25V
C63	NCB31EK-223	CER.CAPACITOR	0.022	25V
C64	NCB31EK-223	CER.CAPACITOR	0.022	25V
C65	NCB31EK-223	CER.CAPACITOR	0.022	25V
C66	NCB31EK-223	CER.CAPACITOR	0.022	25V
C67	NCB31EK-223	CER.CAPACITOR	0.022	25V
C68	NCB31EK-223	CER.CAPACITOR	0.022	25V
C69	NCB31EK-223	CER.CAPACITOR	0.022	25V
C70	NCB31EK-223	CER.CAPACITOR	0.022	25V
C71	NCB31EK-223	CER.CAPACITOR	0.022	25V
C72	NCB31EK-223	CER.CAPACITOR	0.022	25V
C73	NCB31EK-223	CER.CAPACITOR	0.022	25V
C74	NCB31EK-223	CER.CAPACITOR	0.022	25V
C75	NCB31EK-223	CER.CAPACITOR	0.022	25V
C76	NCF31CZ-334	CER.CAPACITOR	0.33	16V
C77	NCF31CZ-104	CER.CAPACITOR	0.10	16V
C78	NCB31EK-223	CER.CAPACITOR	0.022	25V
C79	NCB31EK-223	CER.CAPACITOR	0.022	25V
C80	NCF31CZ-334	CER.CAPACITOR	0.33	16V
C81	NCF31CZ-104	CER.CAPACITOR	0.10	16V
C82	NCB31EK-223	CER.CAPACITOR	0.022	25V
C83	NCB31EK-223	CER.CAPACITOR	0.022	25V
C84	NEH91CM-106	E.CAPACITOR	10	16V
C85	NCB31EK-223	CER.CAPACITOR	0.022	25V
C86	NCB31EK-223	CER.CAPACITOR	0.022	25V
C87	NCB31EK-223	CER.CAPACITOR	0.022	25V
C88	NCB31EK-223	CER.CAPACITOR	0.022	25V
C89	NCB31EK-223	CER.CAPACITOR	0.022	25V
C90	NCB31EK-223	CER.CAPACITOR	0.022	25V
C91	NCB31EK-223	CER.CAPACITOR	0.022	25V
C92	NCB31EK-223	CER.CAPACITOR	0.022	25V
C93	NCB31EK-223	CER.CAPACITOR	0.022	25V
C94	NCB31EK-223	CER.CAPACITOR	0.022	25V
C95	NCB31EK-223	CER.CAPACITOR	0.022	25V
C96	NCB31EK-223	CER.CAPACITOR	0.022	25V
C97	NCB31EK-223	CER.CAPACITOR	0.022	25V
C98	NCB31EK-223	CER.CAPACITOR	0.022	25V
C99	NEH91CM-106	E.CAPACITOR	10	16V
C100	NCB31EK-223	CER.CAPACITOR	0.022	25V
C101	NCB31EK-223	CER.CAPACITOR	0.022	25V
C102	NCB31EK-223	CER.CAPACITOR	0.022	25V
C103	NCB31EK-223	CER.CAPACITOR	0.022	25V
C104	NEH71AM-227	E.CAPACITOR	220	10V
C105	NCB31EK-223	CER.CAPACITOR	0.022	25V
C106	NEH71AM-227	E.CAPACITOR	220	10V
C107	NCB31EK-223	CER.CAPACITOR	0.022	25V
C108	NCB31EK-223	CER.CAPACITOR	0.022	25V

Symbol No.	Part No.	Part Name	Description	
C301	NCB31HK-103	CER.CAPACITOR	0.010	50V
C302	NCB31HK-103	CER.CAPACITOR	0.010	50V
C303	NCB31HK-103	CER.CAPACITOR	0.010	50V
C304	NCB31HK-103	CER.CAPACITOR	0.010	50V
C305	NCB31HK-103	CER.CAPACITOR	0.010	50V
C306	NCB31HK-103	CER.CAPACITOR	0.010	50V
C307	NCB31HK-103	CER.CAPACITOR	0.010	50V
C308	NCB31HK-103	CER.CAPACITOR	0.010	50V
C309	NCB31HK-103	CER.CAPACITOR	0.010	50V
C310	NCB31HK-103	CER.CAPACITOR	0.010	50V
C311	NCB31HK-103	CER.CAPACITOR	0.010	50V
C312	NCB31HK-103	CER.CAPACITOR	0.010	50V
C313	NCB31HK-103	CER.CAPACITOR	0.010	50V
C314	NCB31HK-103	CER.CAPACITOR	0.010	50V
C315	NCB31HK-103	CER.CAPACITOR	0.010	50V
C316	NCB31HK-103	CER.CAPACITOR	0.010	50V
C317	NCF31CZ-104	CER.CAPACITOR	0.10	16V
C318	NCF31CZ-104	CER.CAPACITOR	0.10	16V
C319	NCB31HK-103	CER.CAPACITOR	0.010	50V
C320	NCB31HK-103	CER.CAPACITOR	0.010	50V
C321	NCB31HK-103	CER.CAPACITOR	0.010	50V
C322	NCB31HK-103	CER.CAPACITOR	0.010	50V
C323	NCB31HK-103	CER.CAPACITOR	0.010	50V
C324	NCB31HK-103	CER.CAPACITOR	0.010	50V
C325	NCB31HK-103	CER.CAPACITOR	0.010	50V
C326	NCB31HK-103	CER.CAPACITOR	0.010	50V
C327	NCB31HK-103	CER.CAPACITOR	0.010	50V
C328	NCB31HK-103	CER.CAPACITOR	0.010	50V
C329	NCB31HK-103	CER.CAPACITOR	0.010	50V
C330	NCB31HK-103	CER.CAPACITOR	0.010	50V
C331	NEH91HM-105	E.CAPACITOR	1.0	50V
C332	NCT06CH-180	CER.CAPACITOR	18P	50V
C333	NCB31HK-103	CER.CAPACITOR	0.010	50V
C334	NCB31HK-103	CER.CAPACITOR	0.010	50V
C335	NEZ0001-107	E.CAPACITOR	100	
C336	NEZ0001-107	E.CAPACITOR	100	
C337	NCB31HK-103	CER.CAPACITOR	0.010	50V
C338	NCT06CH-180	CER.CAPACITOR	18P	50V
C339	NCB31HK-682	CER.CAPACITOR	6800P	50V
C340	NCF31CZ-104	CER.CAPACITOR	0.10	16V
C341	NEH91HM-225	E.CAPACITOR	2.2	50V
C342	NEH91HM-225	E.CAPACITOR	2.2	50V
C343	NEH91CM-106	E.CAPACITOR	10	16V
C344	NEH91CM-106	E.CAPACITOR	10	16V
C345	NCB31HK-103	CER.CAPACITOR	0.010	50V
C346	NEH91HM-105	E.CAPACITOR	1.0	50V
C347	NCT06CH-180	CER.CAPACITOR	18P	50V
C348	NCT06CH-180	CER.CAPACITOR	18P	50V
C349	NCB31HK-103	CER.CAPACITOR	0.010	50V
C350	NCB31HK-103	CER.CAPACITOR	0.010	50V
C351	NCB31HK-103	CER.CAPACITOR	0.010	50V
C352	NCB31HK-103	CER.CAPACITOR	0.010	50V
C353	NCB31HK-103	CER.CAPACITOR	0.010	50V
C354	NCB31HK-103	CER.CAPACITOR	0.010	50V
C355	NCB31HK-103	CER.CAPACITOR	0.010	50V
C356	NCB31HK-103	CER.CAPACITOR	0.010	50V
C357	NCF31CZ-104	CER.CAPACITOR	0.10	16V
C358	NCF31CZ-104	CER.CAPACITOR	0.10	16V
C359	NCB31HK-103	CER.CAPACITOR	0.010	50V

Symbol No.	Part No.	Part Name	Description	
C401	NCB31HK-103	CER.CAPACITOR	0.010	50V
C402	NCB31HK-103	CER.CAPACITOR	0.010	50V
C403	NCB31HK-103	CER.CAPACITOR	0.010	50V
C404	NCT06CH-270	CER.CAPACITOR	27P	50V
C405	NCT06CH-270	CER.CAPACITOR	27P	50V
C406	NCB31HK-103	CER.CAPACITOR	0.010	50V
C407	NCB31HK-103	CER.CAPACITOR	0.010	50V
C408	NCB31HK-103	CER.CAPACITOR	0.010	50V
C409	NCB31HK-103	CER.CAPACITOR	0.010	50V
C410	NCB31HK-103	CER.CAPACITOR	0.010	50V
C411	NCB31HK-103	CER.CAPACITOR	0.010	50V
C412	NCB31HK-103	CER.CAPACITOR	0.010	50V
C413	NCB31HK-103	CER.CAPACITOR	0.010	50V
C414	NCB31HK-103	CER.CAPACITOR	0.010	50V
C415	NCB31HK-103	CER.CAPACITOR	0.010	50V
C416	NCB31HK-103	CER.CAPACITOR	0.010	50V
C417	NCB31HK-103	CER.CAPACITOR	0.010	50V
C418	NCB31HK-103	CER.CAPACITOR	0.010	50V
C419	NCB31HK-103	CER.CAPACITOR	0.010	50V
C420	NCB31HK-103	CER.CAPACITOR	0.010	50V
C421	NCB31HK-103	CER.CAPACITOR	0.010	50V
C422	NCB31HK-103	CER.CAPACITOR	0.010	50V
C423	NCB31HK-103	CER.CAPACITOR	0.010	50V
C424	NCB31HK-103	CER.CAPACITOR	0.010	50V
C425	NCB31HK-103	CER.CAPACITOR	0.010	50V
L1	YU41135-100	COIL	10μ	
L2	PU58201-1R2	COIL	1.2μ	
L3	PU58201-1R2	COIL	1.2μ	
L4	YU41135-100	COIL	10μ	
L5	YU41135-100	COIL	10μ	
L6	YU41135-100	COIL	10μ	
L7	YU41135-100	COIL	10μ	
L301	YU41135-101	COIL	100μ	
L302	YU41135-101	COIL	100μ	
LC1	PGZ01972	NOISE FILTER		
LC2	PGZ01972	NOISE FILTER		
LC301	SSV3036-12R3	LC FILTER		
X1	PGZ02143	CRYSTAL	49.5MHz	
X401	PGZ02200-001	CRYSTAL	4.9152MHz	
TH301	SSV2606-103	THERMISTOR		
CN1	PGZ02142-120	CONNECTOR	120PIN	
CN2	PGZ02142-100	CONNECTOR	100PIN	
TP1	SCV1880-001	TEST POINT		
TP2	SCV1880-001	TEST POINT		
TP3	SCV1880-001	TEST POINT		
TP4	SCV1880-001	TEST POINT		
TP5	SCV1880-001	TEST POINT		
TP6	SCV1880-001	TEST POINT		
TP7	SCV1880-001	TEST POINT		
TP8	SCV1880-001	TEST POINT		
TP9	SCV1880-001	TEST POINT		

[PV PROCESS]

Symbol No.	Part No.	Part Name	Description
TP10	SCV1880-001	TEST POINT	
TP11	SCV1880-001	TEST POINT	
TP12	SCV1880-001	TEST POINT	
TP13	SCV1880-001	TEST POINT	
TP14	SCV1880-001	TEST POINT	
TP15	SCV1880-001	TEST POINT	
TP16	SCV1880-001	TEST POINT	
TP17	SCV1880-001	TEST POINT	
TP18	SCV1880-001	TEST POINT	
TP19	SCV1880-001	TEST POINT	
TP20	SCV1880-001	TEST POINT	
TP21	SCV1880-001	TEST POINT	
TP301	SCV1880-001	TEST POINT	
TP302	SCV1880-001	TEST POINT	
TP303	SCV1880-001	TEST POINT	
TP304	SCV1880-001	TEST POINT	
TP305	SCV1880-001	TEST POINT	
TP306	SCV1880-001	TEST POINT	
TP307	SCV1880-001	TEST POINT	
TP308	SCV1880-001	TEST POINT	
TP309	SCV1880-001	TEST POINT	
TP310	SCV1880-001	TEST POINT	
TP311	SCV1880-001	TEST POINT	
TP312	SCV1880-001	TEST POINT	
TP313	SCV1880-001	TEST POINT	
TP314	SCV1880-001	TEST POINT	
TP315	SCV1880-001	TEST POINT	
TP316	SCV1880-001	TEST POINT	
TP401	SCV1880-001	TEST POINT	
SL1	PRD20530	SHIELD CASE	
SC1	DPSP2606Z	SCREW	M2.6×6
SP1	PGZ00582	SPACER	

6.6 OUT MEM BOARD ASSEMBLY LIST [1][4]

SLK1016-A0A [1][4]□□□□□□□

Symbol No.	Part No.	Part Name	Description
IC1	M51957BFP	I.C.(M)	MITSUBISHI
IC2	TD74BC541F	I.C.(M)	TOSHIBA
IC3	DS90C032TM	I.C.(M)	NATIONAL SEMICO
IC4	DS90C032TM	I.C.(M)	NATIONAL SEMICO
IC5	DS90C032TM	I.C.(M)	NATIONAL SEMICO
IC6	TD74BC541F	I.C.(M)	TOSHIBA
IC7	JCL0025	I.C.(M)	JVC
IC8	TD74BC541F	I.C.(M)	TOSHIBA
IC9	TD74BC541F	I.C.(M)	TOSHIBA
IC10	TD74BC541F	I.C.(M)	TOSHIBA
IC11	UPD78P054GC-201	I.C.(M)	NEC
IC12	UPC78L05T	I.C.(M)	NEC
IC13	TC7W04F	I.C.(M)	TOSHIBA
IC14	UPC4082G2	I.C.(M)	NEC
IC15	TC4W53F	I.C.(M)	TOSHIBA
IC16	UPC4082G2	I.C.(M)	NEC
IC17	UPC4082G2	I.C.(M)	NEC
IC18	TC4W53F	I.C.(M)	TOSHIBA
IC19	UPC4074G2	I.C.(M)	NEC
IC20	UPC78L12T	I.C.(M)	NEC
IC21	LM79L12ACM	I.C.(M)	NS
IC22	TC7W04F	I.C.(M)	TOSHIBA
IC23	UPC78L05T	I.C.(M)	NEC
IC24	UPC78L12T	I.C.(M)	NEC
IC25	74ACT574SJ	I.C.(M)	NS
IC26	74ACT574SJ	I.C.(M)	NS
IC27	CXD1177Q	I.C.(M)	SONY
IC28	TC74HC08AF	I.C.(M)	TOSHIBA
IC29	TC7W04F	I.C.(M)	TOSHIBA
IC30	UPC78L12T	I.C.(M)	NEC
IC31	UPC78L05T	I.C.(M)	NEC
IC32	CXD1171M	I.C.(M)	SONY
IC33	74ACT574SJ	I.C.(M)	NS
IC34	74ACT574SJ	I.C.(M)	NS
IC35	CXD1177Q	I.C.(M)	SONY
IC36	TC7W04F	I.C.(M)	TOSHIBA
IC37	LM79L05ACM	I.C.(M)	NS
IC38	LM79L05ACM	I.C.(M)	NS
IC39	JCL0034	I.C.(M)	JVC
IC40	CXK48324Q	I.C.(M)	SONY
IC41	CXK48324Q	I.C.(M)	SONY
IC42	CXK48324Q	I.C.(M)	SONY
IC43	CXK48324Q	I.C.(M)	SONY
IC44	DS90C031TM	I.C.(M)	NATIONAL SEMICO
IC45	DS90C031TM	I.C.(M)	NATIONAL SEMICO
IC46	TD74BC541F	I.C.(M)	TOSHIBA
Q1	2SC2412K(QR)	TRANSISTOR	ROHM
Q2	2SA1037K(QR)	TRANSISTOR	ROHM
Q3	2SC2412K(QR)	TRANSISTOR	ROHM
Q4	2SC2412K(QR)	TRANSISTOR	ROHM
Q5	2SA1037K(QR)	TRANSISTOR	ROHM
Q6	2SC2412K(QR)	TRANSISTOR	ROHM
Q7	2SC2412K(QR)	TRANSISTOR	ROHM
Q8	2SA1037K(QR)	TRANSISTOR	ROHM
Q9	2SC2412K(QR)	TRANSISTOR	ROHM
Q10	2SC2412K(QR)	TRANSISTOR	ROHM
Q11	2SA1037K(QR)	TRANSISTOR	ROHM
Q12	2SC2412K(QR)	TRANSISTOR	ROHM

Symbol No.	Part No.	Part Name	Description	
Q13	2SC2412K(QR)	TRANSISTOR	ROHM	
Q14	2SA1037K(QR)	TRANSISTOR	ROHM	
Q15	2SC2412K(QR)	TRANSISTOR	ROHM	
D100	DAP202K	DIODE	ROHM	
R100	NRVA62D-101	M.F.RESISTOR	100	1/16W
R101	NRVA62D-101	M.F.RESISTOR	100	1/16W
R102	NRVA62D-101	M.F.RESISTOR	100	1/16W
R103	NRVA62D-101	M.F.RESISTOR	100	1/16W
R104	NRVA62D-101	M.F.RESISTOR	100	1/16W
R105	NRVA62D-101	M.F.RESISTOR	100	1/16W
R106	NRVA62D-101	M.F.RESISTOR	100	1/16W
R107	NRVA62D-101	M.F.RESISTOR	100	1/16W
R108	NRVA62D-101	M.F.RESISTOR	100	1/16W
R110	NRVA62D-101	M.F.RESISTOR	100	1/16W
R111	NRVA62D-101	M.F.RESISTOR	100	1/16W
R112	NRVA62D-101	M.F.RESISTOR	100	1/16W
R113	NRVA62D-101	M.F.RESISTOR	100	1/16W
R114	NRVA62D-101	M.F.RESISTOR	100	1/16W
R115	NRVA62D-101	M.F.RESISTOR	100	1/16W
R117	NRVA62D-101	M.F.RESISTOR	100	1/16W
R118	NRVA62D-101	M.F.RESISTOR	100	1/16W
R119	NRVA62D-101	M.F.RESISTOR	100	1/16W
R120	NRVA62D-101	M.F.RESISTOR	100	1/16W
R121	NRVA62D-101	M.F.RESISTOR	100	1/16W
R122	NRVA62D-101	M.F.RESISTOR	100	1/16W
R123	NRVA62D-103	M.F.RESISTOR	10K	1/16W
R124	NRVA62D-332	M.F.RESISTOR	3.3K	1/16W
R125	NRVA62D-122	M.F.RESISTOR	1.2K	1/16W
R126	NRVA62D-105	M.F.RESISTOR	1.0M	1/16W
R127	NRVA62D-103	M.F.RESISTOR	10K	1/16W
R128	NRVA62D-103	M.F.RESISTOR	10K	1/16W
R129	NRVA62D-103	M.F.RESISTOR	10K	1/16W
R130	NRVA62D-103	M.F.RESISTOR	10K	1/16W
R131	NRVA62D-103	M.F.RESISTOR	10K	1/16W
R132	NRVA62D-103	M.F.RESISTOR	10K	1/16W
R133	NRVA62D-103	M.F.RESISTOR	10K	1/16W
R134	NRVA62D-103	M.F.RESISTOR	10K	1/16W
R135	NRVA62D-103	M.F.RESISTOR	10K	1/16W
R136	NRVA62D-103	M.F.RESISTOR	10K	1/16W
R137	NRVA62D-153	M.F.RESISTOR	15K	1/16W
R138	NRVA62D-122	M.F.RESISTOR	1.2K	1/16W
R139	NRVA62D-102	M.F.RESISTOR	1.0K	1/16W
R140	NRVA62D-102	M.F.RESISTOR	1.0K	1/16W
R141	NRVA62D-103	M.F.RESISTOR	10K	1/16W
R142	NRVA62D-102	M.F.RESISTOR	1.0K	1/16W
R143	NRVA62D-102	M.F.RESISTOR	1.0K	1/16W
R144	NRVA62D-102	M.F.RESISTOR	1.0K	1/16W
R145	NRVA62D-103	M.F.RESISTOR	10K	1/16W
R146	NRVA62D-103	M.F.RESISTOR	10K	1/16W
R147	NRVA62D-103	M.F.RESISTOR	10K	1/16W
R148	NRVA62D-392	M.F.RESISTOR	3.9K	1/16W
R149	NRVA62D-123	M.F.RESISTOR	12K	1/16W
R150	NRVA62D-223	M.F.RESISTOR	22K	1/16W
R151	NRVA62D-562	M.F.RESISTOR	5.6K	1/16W
R152	NRVA62D-472	M.F.RESISTOR	4.7K	1/16W
R153	NRVA62D-473	M.F.RESISTOR	47K	1/16W

Symbol No.	Part No.	Part Name	Description	
R154	NRVA62D-103	M.F.RESISTOR	10K	1/16W
R155	NRVA62D-103	M.F.RESISTOR	10K	1/16W
R156	NRVA62D-123	M.F.RESISTOR	12K	1/16W
R157	NRVA62D-512	M.F.RESISTOR	5.1K	1/16W
R158	NRVA62D-512	M.F.RESISTOR	5.1K	1/16W
R159	NRVA62D-912	M.F.RESISTOR	9.1K	1/16W
R160	NRVA62D-332	M.F.RESISTOR	3.3K	1/16W
R161	NRVA62D-303	M.F.RESISTOR	30K	1/16W
R162	NRVA62D-303	M.F.RESISTOR	30K	1/16W
R163	NRVA62D-104	M.F.RESISTOR	100K	1/16W
R164	NRVA62D-472	M.F.RESISTOR	4.7K	1/16W
R165	NRVA62D-512	M.F.RESISTOR	5.1K	1/16W
R166	NRVA62D-912	M.F.RESISTOR	9.1K	1/16W
R167	NRVA62D-332	M.F.RESISTOR	3.3K	1/16W
R168	NRVA62D-472	M.F.RESISTOR	4.7K	1/16W
R169	NRVA62D-101	M.F.RESISTOR	100	1/16W
R170	NRVA62D-101	M.F.RESISTOR	100	1/16W
R171	NRVA62D-332	M.F.RESISTOR	3.3K	1/16W
R172	NRVA62D-201	M.F.RESISTOR	200	1/16W
R173	NRVA62D-201	M.F.RESISTOR	200	1/16W
R174	NRVA62D-103	M.F.RESISTOR	10K	1/16W
R175	NRVA62D-472	M.F.RESISTOR	4.7K	1/16W
R176	NRVA62D-333	M.F.RESISTOR	33K	1/16W
R177	NRVA62D-563	M.F.RESISTOR	56K	1/16W
R178	NRVA62D-222	M.F.RESISTOR	2.2K	1/16W
R179	NRVA62D-101	M.F.RESISTOR	100	1/16W
R180	NRVA62D-152	M.F.RESISTOR	1.5K	1/16W
R181	NRVA62D-152	M.F.RESISTOR	1.5K	1/16W
R182	NRVA62D-101	M.F.RESISTOR	100	1/16W
R183	NRVA62D-333	M.F.RESISTOR	33K	1/16W
R184	NRVA62D-563	M.F.RESISTOR	56K	1/16W
R185	NRVA62D-222	M.F.RESISTOR	2.2K	1/16W
R186	NRVA62D-101	M.F.RESISTOR	100	1/16W
R187	NRVA62D-152	M.F.RESISTOR	1.5K	1/16W
R188	NRVA62D-152	M.F.RESISTOR	1.5K	1/16W
R189	NRVA62D-101	M.F.RESISTOR	100	1/16W
R190	NRVA62D-471	M.F.RESISTOR	470	1/16W
R191	NRVA62D-332	M.F.RESISTOR	3.3K	1/16W
R192	NRVA62D-201	M.F.RESISTOR	200	1/16W
R193	NRVA62D-103	M.F.RESISTOR	10K	1/16W
R194	NRVA62D-472	M.F.RESISTOR	4.7K	1/16W
R195	NRVA62D-222	M.F.RESISTOR	2.2K	1/16W
R196	NRVA62D-101	M.F.RESISTOR	100	1/16W
R197	NRVA62D-152	M.F.RESISTOR	1.5K	1/16W
R198	NRVA62D-152	M.F.RESISTOR	1.5K	1/16W
R199	NRVA62D-101	M.F.RESISTOR	100	1/16W
R200	NRVA62D-101	M.F.RESISTOR	100	1/16W
R201	NRVA62D-101	M.F.RESISTOR	100	1/16W
R202	NRVA62D-332	M.F.RESISTOR	3.3K	1/16W
R203	NRVA62D-201	M.F.RESISTOR	200	1/16W
R204	NRVA62D-201	M.F.RESISTOR	200	1/16W
R205	NRVA62D-103	M.F.RESISTOR	10K	1/16W
R206	NRVA62D-472	M.F.RESISTOR	4.7K	1/16W
R207	NRVA62D-333	M.F.RESISTOR	33K	1/16W
R208	NRVA62D-563	M.F.RESISTOR	56K	1/16W
R209	NRVA62D-222	M.F.RESISTOR	2.2K	1/16W
R210	NRVA62D-101	M.F.RESISTOR	100	1/16W
R211	NRVA62D-152	M.F.RESISTOR	1.5K	1/16W
R212	NRVA62D-152	M.F.RESISTOR	1.5K	1/16W

[OUT MEM]

Symbol No.	Part No.	Part Name	Description	
R213	NRVA62D-101	M.F.RESISTOR	100	1/16W
R214	NRVA62D-333	M.F.RESISTOR	33K	1/16W
R215	NRVA62D-563	M.F.RESISTOR	56K	1/16W
R216	NRVA62D-222	M.F.RESISTOR	2.2K	1/16W
R217	NRVA62D-101	M.F.RESISTOR	100	1/16W
R218	NRVA62D-152	M.F.RESISTOR	1.5K	1/16W
R219	NRVA62D-152	M.F.RESISTOR	1.5K	1/16W
R220	NRVA62D-101	M.F.RESISTOR	100	1/16W
R221	NRVA62D-101	M.F.RESISTOR	100	1/16W
R226	NRVA62D-101	M.F.RESISTOR	100	1/16W
R229	NRVA62D-103	M.F.RESISTOR	10K	1/16W
R230	NRVA62D-103	M.F.RESISTOR	10K	1/16W
R231	NRVA62D-103	M.F.RESISTOR	10K	1/16W
R232	NRVA62D-103	M.F.RESISTOR	10K	1/16W
R233	NRVA62D-103	M.F.RESISTOR	10K	1/16W
R234	NRVA62D-103	M.F.RESISTOR	10K	1/16W
R235	NRVA62D-103	M.F.RESISTOR	10K	1/16W
R236	NRVA62D-101	M.F.RESISTOR	100	1/16W
R238	NRVA62D-101	M.F.RESISTOR	100	1/16W
R239	NRVA62D-101	M.F.RESISTOR	100	1/16W
R240	NRVA62D-101	M.F.RESISTOR	100	1/16W
R241	NRVA62D-101	M.F.RESISTOR	100	1/16W
R242	NRSA02J-0R0	M.G.RESISTOR	0	1/10W
R243	NRSA02J-470	M.G.RESISTOR	47	1/10W
R244	NRSA02J-0R0	M.G.RESISTOR	0	1/10W
R300	NRVA62D-103	M.F.RESISTOR	10K	1/16W
R301	NRVA62D-103	M.F.RESISTOR	10K	1/16W
R303	NRVA62D-101	M.F.RESISTOR	100	1/16W
R304	NRVA62D-101	M.F.RESISTOR	100	1/16W
VR1	NVP1415-103	TRIM.RESISTOR	C LEV	
RA1	NRB082J-101	RESISTOR ARRAY		
RA2	NRB082J-101	RESISTOR ARRAY		
RA3	NRB082J-101	RESISTOR ARRAY		
RA4	NRB082J-103	RESISTOR ARRAY		
RA5	NRB082J-101	RESISTOR ARRAY		
RA6	NRB082J-103	RESISTOR ARRAY		
RA8	NRB082J-101	RESISTOR ARRAY		
RA9	NRB082J-103	RESISTOR ARRAY		
RA10	NRB082J-103	RESISTOR ARRAY		
RA11	NRB082J-101	RESISTOR ARRAY		
RA12	NRB082J-101	RESISTOR ARRAY		
RA13	NRB082J-101	RESISTOR ARRAY		
RA14	NRB082J-101	RESISTOR ARRAY		
RA15	NRB082J-101	RESISTOR ARRAY		
RA16	NRB082J-101	RESISTOR ARRAY		
RA200	NRB082J-101	RESISTOR ARRAY		
RA201	NRB082J-101	RESISTOR ARRAY		
RA202	NRB082J-101	RESISTOR ARRAY		
C100	QCFA1HZ-103	CER.CAPACITOR	0.010	50V
C101	QCFA1HZ-103	CER.CAPACITOR	0.010	50V
C102	NEH91CM-476	E.CAPACITOR	47	16V
C103	QCFA1HZ-103	CER.CAPACITOR	0.010	50V
C104	QCFA1HZ-103	CER.CAPACITOR	0.010	50V
C105	QCFA1HZ-103	CER.CAPACITOR	0.010	50V
C106	QCFA1HZ-103	CER.CAPACITOR	0.010	50V
C107	QCFA1HZ-103	CER.CAPACITOR	0.010	50V

Symbol No.	Part No.	Part Name	Description	
C108	NEH91CM-476	E.CAPACITOR	47	16V
C109	QCFA1HZ-103	CER.CAPACITOR	0.010	50V
C110	QCFA1HZ-103	CER.CAPACITOR	0.010	50V
C111	QCYA1HK-102	CER.CAPACITOR	1000P	50V
C112	QCFA1HZ-103	CER.CAPACITOR	0.010	50V
C113	NEH91CM-106	E.CAPACITOR	10	16V
C114	QCFA1HZ-103	CER.CAPACITOR	0.010	50V
C115	QCFA1HZ-103	CER.CAPACITOR	0.010	50V
C116	QCFA1HZ-103	CER.CAPACITOR	0.010	50V
C117	QCFA1HZ-103	CER.CAPACITOR	0.010	50V
C118	QCFA1HZ-103	CER.CAPACITOR	0.010	50V
C119	QCFA1HZ-103	CER.CAPACITOR	0.010	50V
C120	QCFA1HZ-103	CER.CAPACITOR	0.010	50V
C121	QCFA1HZ-103	CER.CAPACITOR	0.010	50V
C122	QCFA1HZ-103	CER.CAPACITOR	0.010	50V
C123	NEH91CM-106	E.CAPACITOR	10	16V
C124	QCFA1HZ-103	CER.CAPACITOR	0.010	50V
C125	QCFA1HZ-103	CER.CAPACITOR	0.010	50V
C126	NEH91CM-106	E.CAPACITOR	10	16V
C127	QCSA1HJ-330	CER.CAPACITOR	33P	50V
C128	QCSA1HJ-330	CER.CAPACITOR	33P	50V
C129	NEH91CM-476	E.CAPACITOR	47	16V
C130	QCFA1HZ-103	CER.CAPACITOR	0.010	50V
C131	NEH91CM-476	E.CAPACITOR	47	16V
C132	QCFA1HZ-103	CER.CAPACITOR	0.010	50V
C133	QCFA1HZ-103	CER.CAPACITOR	0.010	50V
C134	NEH91CM-106	E.CAPACITOR	10	16V
C135	QCFA1HZ-103	CER.CAPACITOR	0.010	50V
C136	QCFA1HZ-103	CER.CAPACITOR	0.010	50V
C137	NEH91CM-476	E.CAPACITOR	47	16V
C138	QCFA1HZ-103	CER.CAPACITOR	0.010	50V
C139	QCFA1HZ-103	CER.CAPACITOR	0.010	50V
C140	QCFA1HZ-103	CER.CAPACITOR	0.010	50V
C141	QCYA1HK-222	CER.CAPACITOR	2200P	50V
C142	QCYA1HK-222	CER.CAPACITOR	2200P	50V
C143	QCYA1HK-222	CER.CAPACITOR	2200P	50V
C145	QCFA1HZ-103	CER.CAPACITOR	0.010	50V
C146	QCFA1EZ-104	CER.CAPACITOR	0.10	25V
C147	QCFA1EZ-104	CER.CAPACITOR	0.10	25V
C148	QCFA1EZ-104	CER.CAPACITOR	0.10	25V
C149	QCFA1EZ-104	CER.CAPACITOR	0.10	25V
C150	QCFA1EZ-104	CER.CAPACITOR	0.10	25V
C151	QCFA1EZ-104	CER.CAPACITOR	0.10	25V
C152	QCFA1EZ-104	CER.CAPACITOR	0.10	25V
C153	NEF11AM-475	TAN.CAPACITOR	4.7	10V
C154	QCFA1HZ-103	CER.CAPACITOR	0.010	50V
C155	QCFA1EZ-104	CER.CAPACITOR	0.10	25V
C156	QCFA1EZ-104	CER.CAPACITOR	0.10	25V
C157	QCFA1EZ-104	CER.CAPACITOR	0.10	25V
C158	QCFA1EZ-104	CER.CAPACITOR	0.10	25V
C159	NEF11AM-475	TAN.CAPACITOR	4.7	10V
C160	NEF11AM-475	TAN.CAPACITOR	4.7	10V
C161	QCFA1HZ-103	CER.CAPACITOR	0.010	50V
C162	NEH91CM-476	E.CAPACITOR	47	16V
C163	QCFA1HZ-103	CER.CAPACITOR	0.010	50V
C164	QCFA1HZ-103	CER.CAPACITOR	0.010	50V
C165	QCFA1HZ-103	CER.CAPACITOR	0.010	50V
C166	NEH91CM-476	E.CAPACITOR	47	16V
C167	QCFA1HZ-103	CER.CAPACITOR	0.010	50V

Symbol No.	Part No.	Part Name	Description	
C168	QCFA1HZ-103	CER.CAPACITOR	0.010	50V
C169	QCFA1HZ-103	CER.CAPACITOR	0.010	50V
C171	QCFA1HZ-103	CER.CAPACITOR	0.010	50V
C172	QCFA1HZ-103	CER.CAPACITOR	0.010	50V
C173	QCFA1HZ-103	CER.CAPACITOR	0.010	50V
C174	QCFA1HZ-103	CER.CAPACITOR	0.010	50V
C175	NEH91CM-476	E.CAPACITOR	47	16V
C176	QCFA1HZ-103	CER.CAPACITOR	0.010	50V
C177	NEH91CM-476	E.CAPACITOR	47	16V
C178	QCFA1HZ-103	CER.CAPACITOR	0.010	50V
C179	QCFA1HZ-103	CER.CAPACITOR	0.010	50V
C180	NEH91CM-476	E.CAPACITOR	47	16V
C181	QCFA1HZ-103	CER.CAPACITOR	0.010	50V
C182	QCFA1HZ-103	CER.CAPACITOR	0.010	50V
C183	QCFA1HZ-103	CER.CAPACITOR	0.010	50V
C184	QCFA1HZ-103	CER.CAPACITOR	0.010	50V
C185	QCFA1HZ-103	CER.CAPACITOR	0.010	50V
C186	QCFA1HZ-103	CER.CAPACITOR	0.010	50V
C187	QCFA1EZ-104	CER.CAPACITOR	0.10	25V
C188	NEH71AM-107	E.CAPACITOR	100	10V
C189	QCSA1HJ-470	CER.CAPACITOR	47P	50V
C190	NEH71AM-107	E.CAPACITOR	100	10V
C191	NEH71AM-107	E.CAPACITOR	100	10V
C192	QCSA1HJ-470	CER.CAPACITOR	47P	50V
C193	NEH71AM-107	E.CAPACITOR	100	10V
C194	NEH91CM-476	E.CAPACITOR	47	16V
C195	QCFA1HZ-103	CER.CAPACITOR	0.010	50V
C196	NEH91CM-476	E.CAPACITOR	47	16V
C197	QCFA1HZ-103	CER.CAPACITOR	0.010	50V
C198	QCFA1HZ-103	CER.CAPACITOR	0.010	50V
C200	QCFA1HZ-103	CER.CAPACITOR	0.010	50V
C201	QCFA1HZ-103	CER.CAPACITOR	0.010	50V
C202	QCFA1HZ-103	CER.CAPACITOR	0.010	50V
C203	NEH91CM-476	E.CAPACITOR	47	16V
C204	QCFA1HZ-103	CER.CAPACITOR	0.010	50V
C205	NEH91CM-476	E.CAPACITOR	47	16V
C206	QCFA1HZ-103	CER.CAPACITOR	0.010	50V
C207	QCFA1HZ-103	CER.CAPACITOR	0.010	50V
C208	NEH91CM-476	E.CAPACITOR	47	16V
C209	QCFA1HZ-103	CER.CAPACITOR	0.010	50V
C210	QCFA1HZ-103	CER.CAPACITOR	0.010	50V
C211	QCFA1HZ-103	CER.CAPACITOR	0.010	50V
C212	QCFA1HZ-103	CER.CAPACITOR	0.010	50V
C213	QCFA1HZ-103	CER.CAPACITOR	0.010	50V
C214	NEH91CM-476	E.CAPACITOR	47	16V
C215	QCFA1HZ-103	CER.CAPACITOR	0.010	50V
C216	QCFA1HZ-103	CER.CAPACITOR	0.010	50V
C217	QCSA1HJ-150	CER.CAPACITOR	15P	50V
C218	NEH71AM-107	E.CAPACITOR	100	10V
C219	QCFA1HZ-103	CER.CAPACITOR	0.010	50V
C220	QCFA1EZ-104	CER.CAPACITOR	0.10	25V
C221	NEH71AM-107	E.CAPACITOR	100	10V
C222	QCSA1HJ-470	CER.CAPACITOR	47P	50V
C223	NEH71AM-107	E.CAPACITOR	100	10V
C224	NEH71AM-107	E.CAPACITOR	100	10V
C225	QCSA1HJ-470	CER.CAPACITOR	47P	50V
C226	NEH71AM-107	E.CAPACITOR	100	10V
C227	NEH91CM-476	E.CAPACITOR	47	16V
C228	QCFA1HZ-103	CER.CAPACITOR	0.010	50V

Symbol No.	Part No.	Part Name	Description	
C229	NEH91CM-476	E.CAPACITOR	47	16V
C230	QCFA1HZ-103	CER.CAPACITOR	0.010	50V
C231	QCFA1EZ-104	CER.CAPACITOR	0.10	25V
C300	QCFA1HZ-103	CER.CAPACITOR	0.010	50V
C301	NEH91CM-106	E.CAPACITOR	10	16V
C302	NEH91CM-106	E.CAPACITOR	10	16V
C303	QCFA1HZ-103	CER.CAPACITOR	0.010	50V
C304	QCFA1HZ-103	CER.CAPACITOR	0.010	50V
C305	QCFA1HZ-103	CER.CAPACITOR	0.010	50V
C306	QCFA1HZ-103	CER.CAPACITOR	0.010	50V
C307	QCFA1HZ-103	CER.CAPACITOR	0.010	50V
C308	QCFA1HZ-103	CER.CAPACITOR	0.010	50V
C309	QCFA1HZ-103	CER.CAPACITOR	0.010	50V
C310	NEH91CM-106	E.CAPACITOR	10	16V
C311	NEH91CM-106	E.CAPACITOR	10	16V
C312	QCFA1HZ-103	CER.CAPACITOR	0.010	50V
C313	QCFA1HZ-103	CER.CAPACITOR	0.010	50V
C314	NEH91CM-106	E.CAPACITOR	10	16V
C315	NEH91CM-106	E.CAPACITOR	10	16V
C316	QCFA1HZ-103	CER.CAPACITOR	0.010	50V
C317	QCFA1HZ-103	CER.CAPACITOR	0.010	50V
C318	NEH91CM-106	E.CAPACITOR	10	16V
C319	NEH91CM-106	E.CAPACITOR	10	16V
C320	QCFA1HZ-103	CER.CAPACITOR	0.010	50V
C321	QCFA1HZ-103	CER.CAPACITOR	0.010	50V
C322	NEH91CM-106	E.CAPACITOR	10	16V
C323	NEH91CM-106	E.CAPACITOR	10	16V
C324	QCFA1HZ-103	CER.CAPACITOR	0.010	50V
C325	QCFA1HZ-103	CER.CAPACITOR	0.010	50V
C326	NEH91CM-476	E.CAPACITOR	47	16V
C327	QCFA1HZ-103	CER.CAPACITOR	0.010	50V
C328	QCFA1HZ-103	CER.CAPACITOR	0.010	50V
C329	QCFA1HZ-103	CER.CAPACITOR	0.010	50V
C330	NEH91CM-476	E.CAPACITOR	47	16V
C331	QCFA1HZ-103	CER.CAPACITOR	0.010	50V
C332	NEH91CM-476	E.CAPACITOR	47	16V
C333	QCFA1HZ-103	CER.CAPACITOR	0.010	50V
C334	NEH71EM-476	E.CAPACITOR	47	25V
C335	QCFA1HZ-103	CER.CAPACITOR	0.010	50V
C336	NEH71EM-476	E.CAPACITOR	47	25V
C337	QCFA1HZ-103	CER.CAPACITOR	0.010	50V
C338	NEH91CM-476	E.CAPACITOR	47	16V
C339	QCFA1HZ-103	CER.CAPACITOR	0.010	50V
C340	NEH71AM-107	E.CAPACITOR	100	10V
C341	QCFA1HZ-103	CER.CAPACITOR	0.010	50V
C342	NEH71AM-107	E.CAPACITOR	100	10V
C343	QCFA1HZ-103	CER.CAPACITOR	0.010	50V
C344	QCFA1HZ-103	CER.CAPACITOR	0.010	50V
L1	YU41134-8R2	COIL	8.2μ	
L2	YU41134-3R9	COIL	3.9μ	
L3	YU41134-3R9	COIL	3.9μ	
L4	YU41134-3R9	COIL	3.9μ	
L5	YU41134-3R9	COIL	3.9μ	
X1	PGZ02200-001	CRYSTAL	4.9152MHz	

[OUT MEM]

Symbol No.	Part No.	Part Name	Description
S1	SCV1919-004	DIP SWITCH	
CN1	PGZ02142-120	CONNECTOR	120PIN
CN2	PGZ02142-100	CONNECTOR	100PIN
TP1	SSV1096-001	TEST POINT	
TP2	SSV1096-001	TEST POINT	
TP3	SSV1096-001	TEST POINT	
TP4	SSV1096-001	TEST POINT	
TP5	SSV1096-001	TEST POINT	
TP6	SSV1096-001	TEST POINT	
TP7	SSV1096-001	TEST POINT	
TP8	SSV1096-001	TEST POINT	
TP9	SSV1096-001	TEST POINT	
TP10	SSV1096-001	TEST POINT	
TP11	SSV1096-001	TEST POINT	
K100	PGZ01693-009	FERRATE BEADS	
K101	PGZ01693-009	FERRATE BEADS	
K102	PGZ01693-009	FERRATE BEADS	
K103	PGZ01693-009	FERRATE BEADS	
K104	PGZ01693-009	FERRATE BEADS	
K105	PGZ01693-009	FERRATE BEADS	
K106	PGZ01693-009	FERRATE BEADS	
K107	PGZ01693-009	FERRATE BEADS	
K108	PGZ01693-009	FERRATE BEADS	
K109	PGZ01693-009	FERRATE BEADS	
K110	PGZ01693-009	FERRATE BEADS	
K111	PGZ01693-009	FERRATE BEADS	
K112	PGZ01693-009	FERRATE BEADS	
K113	PGZ01693-009	FERRATE BEADS	
K114	PGZ01693-009	FERRATE BEADS	
K115	PGZ01693-009	FERRATE BEADS	
K116	PGZ01693-009	FERRATE BEADS	
K117	PGZ01693-009	FERRATE BEADS	
K118	PGZ01693-009	FERRATE BEADS	
K119	PGZ01693-009	FERRATE BEADS	
K120	PGZ01693-009	FERRATE BEADS	
K200	PGZ01693-009	FERRATE BEADS	
K201	PGZ01693-009	FERRATE BEADS	
K202	PGZ01693-009	FERRATE BEADS	
K203	PGZ01693-009	FERRATE BEADS	
K204	PGZ01693-009	FERRATE BEADS	
K205	PGZ01693-009	FERRATE BEADS	
K206	PGZ01693-009	FERRATE BEADS	
TB1	PGZ02228	EARTH LUG	
TB2	PGZ02228	EARTH LUG	
TB3	PGZ02228	EARTH LUG	
TB4	PGZ02228	EARTH LUG	
SL1	PRD20530	SHIELD CASE	
SC1	DPSP2606Z	SCREW	M2.6×6
SP1	PGZ00582	SPACER	

6.7 ANA IN BOARD ASSEMBLY LIST [1][5]

SLK1026-A2A [1][5]□□□□□□□

Symbol No.	Part No.	Part Name	Description
IC1	UPC78L12T	I.C.(M)	NEC
IC2	MM1111XF	I.C.(M)	MITUMI
IC3	MM1111XF	I.C.(M)	MITUMI
IC4	MM1111XF	I.C.(M)	MITUMI
IC5	UPC78L05T	I.C.(M)	NEC
IC6	NJM79L05UA	I.C.(M)	JRC
IC7	LM6361M	I.C.(M)	TEXAS
IC8	TC74VHC221AF	I.C.(M)	TOSHIBA
IC9	UPC78L05T	I.C.(M)	NEC
IC10	CXD2024AQ	I.C.(M)	SONY
IC11	UPC78L12T	I.C.(M)	NEC
IC12	NJM79L05UA	I.C.(M)	JRC
IC13	MM1111XF	I.C.(M)	MITUMI
IC14	TC4W53F	I.C.(M)	TOSHIBA
IC15	UPC78L12T	I.C.(M)	NEC
IC16	MM1111XF	I.C.(M)	MITUMI
IC18	M51271FP	I.C.(M)	MITSUBISHI
IC19	TC7WU04F	I.C.(M)	TOSHIBA
IC20	UPC78L05T	I.C.(M)	NEC
IC21	UPC311G2	I.C.(M)	NEC
IC22	TC74HC4053AF	I.C.(M)	TOSHIBA
IC23	MC14577CF	I.C.(M)	MOTOROLA
IC24	UPC78L05T	I.C.(M)	NEC
IC25	NJM79L05UA	I.C.(M)	JRC
IC26	TC74VHC86F	I.C.(M)	TOSHIBA
IC27	TC74HC4538AF	I.C.(M)	TOSHIBA
IC28	TC74HC4538AF	I.C.(M)	TOSHIBA
IC31	UPC78L05T	I.C.(M)	NEC
IC32	TC74HC4066AF	I.C.(M)	TOSHIBA
IC33	UPC4074G2	I.C.(M)	NEC
IC34	UPC78L12T	I.C.(M)	NEC
IC35	UPC78L05T	I.C.(M)	NEC
IC301	UPC78L12T	I.C.(M)	NEC
IC302	NJM2234M	I.C.(M)	JRC
IC303	UPC78L05T	I.C.(M)	NEC
IC304	TK16031MTL	I.C.(M)	TOKO DENSI
IC305	UPC78L12T	I.C.(M)	NEC
IC306	NJM79L05UA	I.C.(M)	JRC
IC307	UPC4082G2	I.C.(M)	NEC
IC308	LM6361M	I.C.(M)	TEXAS
IC309	UPC78L05T	I.C.(M)	NEC
IC310	TC4W53F	I.C.(M)	TOSHIBA
IC311	NJM2234M	I.C.(M)	JRC
IC312	TK16031MTL	I.C.(M)	TOKO DENSI
IC313	UPC78L12T	I.C.(M)	NEC
IC314	NJM79L05UA	I.C.(M)	JRC
IC315	UPC4082G2	I.C.(M)	NEC
IC316	LM6361M	I.C.(M)	TEXAS
IC317	TC4W53F	I.C.(M)	TOSHIBA
IC318	NJM2234M	I.C.(M)	JRC
IC319	UPC78L12T	I.C.(M)	NEC
IC320	NJM79L05UA	I.C.(M)	JRC
IC321	UPC4082G2	I.C.(M)	NEC
IC322	LM6361M	I.C.(M)	TEXAS
IC323	TC4W53F	I.C.(M)	TOSHIBA
IC324	TC74VHC541F	I.C.(M)	TOSHIBA
IC325	TC7W00F	I.C.(M)	TOSHIBA
IC326	TC74HC4053AF	I.C.(M)	TOSHIBA
IC327	UPC78L05T	I.C.(M)	NEC
IC328	EL4583CS	I.C.(M)	ELANTEC

Symbol No.	Part No.	Part Name	Description
IC329	TC7W04F	I.C.(M)	TOSHIBA
IC330	TC74VHC221AF	I.C.(M)	TOSHIBA
IC331	UPC311G2	I.C.(M)	NEC
IC601	UPC78L05T	I.C.(M)	NEC
IC602	CXD1175AM	I.C.(M)	SONY
IC603	UPC78L05T	I.C.(M)	NEC
IC604	CXD1175AM	I.C.(M)	SONY
IC605	UPC78L05T	I.C.(M)	NEC
IC606	CXD1175AM	I.C.(M)	SONY
IC607	JCL0026	I.C.(M)	JVC
IC608	TC7W04F	I.C.(M)	TOSHIBA
IC609	TC7W32F	I.C.(M)	TOSHIBA
IC610	DS90C031TM	I.C.(M)	NS
IC611	DS90C031TM	I.C.(M)	NS
IC612	DS90C031TM	I.C.(M)	NS
IC613	DS90C031TM	I.C.(M)	NS
IC614	TC74ACT541F	I.C.(M)	TOSHIBA
IC616	TD74BC541F	I.C.(M)	TOSHIBA
IC617	DS90C031TM	I.C.(M)	NS
IC618	AN77L03M	I.C.(M)	MATSUSHITA
IC619	TC74VHC541F	I.C.(M)	TOSHIBA
IC620	UPC2384GA	I.C.(M)	NEC
IC621	UPC78L12T	I.C.(M)	NEC
IC622	UPC78L05T	I.C.(M)	NEC
IC623	NJM79L05UA	I.C.(M)	JRC
IC624	UPC4082G2	I.C.(M)	NEC
IC625	TC74VHC221AF	I.C.(M)	TOSHIBA
IC626	JCL0024	I.C.(M)	JVC
IC711	TD74BC541F	I.C.(M)	TOSHIBA
IC712	M51957BFP	I.C.(M)	MITSUBISHI
Q1	DTC124EU	TRANSISTOR	ROHM
Q2	2SA1576(QRS)	TRANSISTOR	ROHM
Q3	2SC4081(QR)	TRANSISTOR	ROHM
Q4	2SA1576(QRS)	TRANSISTOR	ROHM
Q5	2SC4081(QR)	TRANSISTOR	ROHM
Q6	2SC4081(QR)	TRANSISTOR	ROHM
Q7	2SC4081(QR)	TRANSISTOR	ROHM
Q8	2SK665	F.E.T.	MATSUSHITA
Q9	2SK665	F.E.T.	MATSUSHITA
Q10	2SC4081(QR)	TRANSISTOR	ROHM
Q11	2SC4081(QR)	TRANSISTOR	ROHM
Q12	2SC4081(QR)	TRANSISTOR	ROHM
Q13	2SC4081(QR)	TRANSISTOR	ROHM
Q14	2SC4081(QR)	TRANSISTOR	ROHM
Q15	2SK665	F.E.T.	MATSUSHITA
Q16	2SC4081(QR)	TRANSISTOR	ROHM
Q17	2SC4081(QR)	TRANSISTOR	ROHM
Q18	2SC4081(QR)	TRANSISTOR	ROHM
Q19	2SC4081(QR)	TRANSISTOR	ROHM
Q20	2SC4081(QR)	TRANSISTOR	ROHM
Q21	2SC4081(QR)	TRANSISTOR	ROHM
Q22	2SC4081(QR)	TRANSISTOR	ROHM
Q23	2SC4081(QR)	TRANSISTOR	ROHM
Q24	2SC4081(QR)	TRANSISTOR	ROHM
Q25	2SC4081(QR)	TRANSISTOR	ROHM
Q26	2SC4081(QR)	TRANSISTOR	ROHM
Q27	DTC124EU	TRANSISTOR	ROHM
Q28	2SC4081(QR)	TRANSISTOR	ROHM
Q29	2SA1576(QRS)	TRANSISTOR	ROHM

Symbol No.	Part No.	Part Name	Description
Q30	2SC4081(QR)	TRANSISTOR	ROHM
Q31	2SA1576(QRS)	TRANSISTOR	ROHM
Q32	2SC4081(QR)	TRANSISTOR	ROHM
Q33	2SC4081(QR)	TRANSISTOR	ROHM
Q34	2SC4081(QR)	TRANSISTOR	ROHM
Q35	2SC4081(QR)	TRANSISTOR	ROHM
Q36	2SC4081(QR)	TRANSISTOR	ROHM
Q37	2SA1576(QRS)	TRANSISTOR	ROHM
Q38	2SC4081(QR)	TRANSISTOR	ROHM
Q202	2SK665	F.E.T.	MATSUSHITA
Q301	2SA1576(QRS)	TRANSISTOR	ROHM
Q302	2SC4081(QR)	TRANSISTOR	ROHM
Q304	2SC4081(QR)	TRANSISTOR	ROHM
Q305	2SC4081(QR)	TRANSISTOR	ROHM
Q306	2SA1576(QRS)	TRANSISTOR	ROHM
Q307	2SC4081(QR)	TRANSISTOR	ROHM
Q308	2SC4081(QR)	TRANSISTOR	ROHM
Q309	2SA1576(QRS)	TRANSISTOR	ROHM
Q310	2SC4081(QR)	TRANSISTOR	ROHM
Q312	2SC4081(QR)	TRANSISTOR	ROHM
Q313	2SC4081(QR)	TRANSISTOR	ROHM
Q314	2SA1576(QRS)	TRANSISTOR	ROHM
Q315	2SC4081(QR)	TRANSISTOR	ROHM
Q316	2SC4081(QR)	TRANSISTOR	ROHM
Q317	2SA1576(QRS)	TRANSISTOR	ROHM
Q318	2SC4081(QR)	TRANSISTOR	ROHM
Q319	2SA1576(QRS)	TRANSISTOR	ROHM
Q320	2SC4081(QR)	TRANSISTOR	ROHM
Q321	2SC4081(QR)	TRANSISTOR	ROHM
Q322	2SA1576(QRS)	TRANSISTOR	ROHM
Q323	2SC4081(QR)	TRANSISTOR	ROHM
Q324	2SC4081(QR)	TRANSISTOR	ROHM
Q325	2SC4081(QR)	TRANSISTOR	ROHM
Q326	2SA1576(QRS)	TRANSISTOR	ROHM
Q327	2SA1576(QRS)	TRANSISTOR	ROHM
Q328	2SC4081(QR)	TRANSISTOR	ROHM
Q329	DTC124EU	TRANSISTOR	ROHM
Q501	2SC4081(QR)	TRANSISTOR	ROHM
Q502	2SC4081(QR)	TRANSISTOR	ROHM
Q503	2SC4081(QR)	TRANSISTOR	ROHM
D1	DAN202U	DIODE	ROHM
D2	DAN202U	DIODE	ROHM
D301	IMN10	D.ARRAY	ROHM
D302	IMN10	D.ARRAY	ROHM
D303	DAP202U	DIODE	ROHM
D601	DAP202U	DIODE	ROHM
D602	DAN202U	DIODE	ROHM
D603	DAP202U	DIODE	ROHM
D604	DAN202U	DIODE	ROHM
D605	DAP202U	DIODE	ROHM
D606	DAN202U	DIODE	ROHM
D607	DA204U	DIODE	ROHM
D608	DA204U	DIODE	ROHM
D609	DA204U	DIODE	ROHM
R1	NRSA63J-101	M.G.RESISTOR	100 1/16W
R2	NRSA63J-151	M.G.RESISTOR	150 1/16W

ANA IN]

Symbol No.	Part No.	Part Name	Description	
R3	NRSA63J-151	M.G.RESISTOR	150	1/16W
R4	NRSA63J-104	M.G.RESISTOR	100K	1/16W
R5	NRSA63J-101	M.G.RESISTOR	100	1/16W
R6	NRSA63J-151	M.G.RESISTOR	150	1/16W
R7	NRSA63J-151	M.G.RESISTOR	150	1/16W
R8	NRSA63J-151	M.G.RESISTOR	150	1/16W
R9	NRSA63J-151	M.G.RESISTOR	150	1/16W
R10	NRSA63J-101	M.G.RESISTOR	100	1/16W
R11	NRSA63J-101	M.G.RESISTOR	100	1/16W
R12	NRSA63J-273	M.G.RESISTOR	27K	1/16W
R13	NRSA63J-101	M.G.RESISTOR	100	1/16W
R14	NRSA63J-101	M.G.RESISTOR	100	1/16W
R15	NRSA63J-333	M.G.RESISTOR	33K	1/16W
R16	NRSA63J-122	M.G.RESISTOR	1.2K	1/16W
R17	NRSA63J-152	M.G.RESISTOR	1.5K	1/16W
R19	NRVA63D-471	M.F.RESISTOR	470	1/16W
R20	NRVA63D-272	M.F.RESISTOR	2.7K	1/16W
R21	NRVA63D-471	M.F.RESISTOR	470	1/16W
R22	NRVA63D-471	M.F.RESISTOR	470	1/16W
R23	NRVA63D-102	M.F.RESISTOR	1.0K	1/16W
R24	NRSA63J-182	M.G.RESISTOR	1.8K	1/16W
R25	NRSA63J-101	M.G.RESISTOR	100	1/16W
R26	NRSA63J-122	M.G.RESISTOR	1.2K	1/16W
R27	NRSA63J-102	M.G.RESISTOR	1.0K	1/16W
R28	NRSA63J-102	M.G.RESISTOR	1.0K	1/16W
R29	NRSA63J-102	M.G.RESISTOR	1.0K	1/16W
R30	NRSA63J-821	M.G.RESISTOR	820	1/16W
R31	NRSA63J-272	M.G.RESISTOR	2.7K	1/16W
R32	NRSA63J-101	M.G.RESISTOR	100	1/16W
R33	NRSA63J-103	M.G.RESISTOR	10K	1/16W
R34	NRSA63J-101	M.G.RESISTOR	100	1/16W
R35	NRSA63J-103	M.G.RESISTOR	10K	1/16W
R36	NRSA63J-103	M.G.RESISTOR	10K	1/16W
R39	NRSA63J-0R0	M.G.RESISTOR	0	1/16W
R40	NRSA63J-332	M.G.RESISTOR	3.3K	1/16W
R41	NRSA63J-182	M.G.RESISTOR	1.8K	1/16W
R42	NRSA63J-182	M.G.RESISTOR	1.8K	1/16W
R43	NRSA63J-221	M.G.RESISTOR	220	1/16W
R44	NRSA63J-332	M.G.RESISTOR	3.3K	1/16W
R45	NRSA63J-221	M.G.RESISTOR	220	1/16W
R46	NRSA63J-222	M.G.RESISTOR	2.2K	1/16W
R47	NRSA63J-153	M.G.RESISTOR	15K	1/16W
R48	NRSA63J-750	M.G.RESISTOR	75	1/16W
R49	NRSA63J-103	M.G.RESISTOR	10K	1/16W
R50	NRSA63J-102	M.G.RESISTOR	1.0K	1/16W
R53	NRSA63J-331	M.G.RESISTOR	330	1/16W
R54	NRSA63J-331	M.G.RESISTOR	330	1/16W
R55	NRSA63J-102	M.G.RESISTOR	1.0K	1/16W
R56	NRSA63J-681	M.G.RESISTOR	680	1/16W
R57	NRSA63J-101	M.G.RESISTOR	100	1/16W
R58	NRSA63J-392	M.G.RESISTOR	3.9K	1/16W
R59	NRSA63J-101	M.G.RESISTOR	100	1/16W
R60	NRSA63J-272	M.G.RESISTOR	2.7K	1/16W
R61	NRSA63J-101	M.G.RESISTOR	100	1/16W
R62	NRSA63J-102	M.G.RESISTOR	1.0K	1/16W
R63	NRSA63J-221	M.G.RESISTOR	220	1/16W
R64	NRSA63J-221	M.G.RESISTOR	220	1/16W
R65	NRSA63J-474	M.G.RESISTOR	470K	1/16W
R66	NRSA63J-472	M.G.RESISTOR	4.7K	1/16W

Symbol No.	Part No.	Part Name	Description	
R67	NRSA63J-181	M.G.RESISTOR	180	1/16W
R68	NRSA63J-181	M.G.RESISTOR	180	1/16W
R69	NRSA63J-122	M.G.RESISTOR	1.2K	1/16W
R70	NRSA63J-681	M.G.RESISTOR	680	1/16W
R71	NRSA63J-681	M.G.RESISTOR	680	1/16W
R72	NRSA63J-122	M.G.RESISTOR	1.2K	1/16W
R75	NRSA63J-681	M.G.RESISTOR	680	1/16W
R76	NRSA63J-103	M.G.RESISTOR	10K	1/16W
R77	NRSA63J-102	M.G.RESISTOR	1.0K	1/16W
R80	NRSA63J-331	M.G.RESISTOR	330	1/16W
R81	NRSA63J-331	M.G.RESISTOR	330	1/16W
R82	NRSA63J-102	M.G.RESISTOR	1.0K	1/16W
R83	NRSA63J-681	M.G.RESISTOR	680	1/16W
R84	NRSA63J-101	M.G.RESISTOR	100	1/16W
R85	NRSA63J-152	M.G.RESISTOR	1.5K	1/16W
R86	NRSA63J-101	M.G.RESISTOR	100	1/16W
R87	NRSA63J-222	M.G.RESISTOR	2.2K	1/16W
R88	NRSA63J-272	M.G.RESISTOR	2.7K	1/16W
R89	NRSA63J-221	M.G.RESISTOR	220	1/16W
R90	NRSA63J-221	M.G.RESISTOR	220	1/16W
R91	NRSA63J-272	M.G.RESISTOR	2.7K	1/16W
R92	NRSA63J-102	M.G.RESISTOR	1.0K	1/16W
R93	NRSA63J-102	M.G.RESISTOR	1.0K	1/16W
R94	NRSA63J-152	M.G.RESISTOR	1.5K	1/16W
R95	NRSA63J-222	M.G.RESISTOR	2.2K	1/16W
R96	NRSA63J-0R0	M.G.RESISTOR	0	1/16W
R100	NRSA63J-823	M.G.RESISTOR	82K	1/16W
R101	NRSA63J-332	M.G.RESISTOR	3.3K	1/16W
R102	NRSA63J-0R0	M.G.RESISTOR	0	1/16W
R104	NRSA63J-474	M.G.RESISTOR	470K	1/16W
R105	NRSA63J-684	M.G.RESISTOR	680K	1/16W
R106	NRSA63J-223	M.G.RESISTOR	22K	1/16W
R107	NRSA63J-682	M.G.RESISTOR	6.8K	1/16W
R108	NRSA63J-153	M.G.RESISTOR	15K	1/16W
R109	NRSA63J-223	M.G.RESISTOR	22K	1/16W
R110	NRSA63J-223	M.G.RESISTOR	22K	1/16W
R111	NRSA63J-102	M.G.RESISTOR	1.0K	1/16W
R112	NRSA63J-221	M.G.RESISTOR	220	1/16W
R113	NRVA63D-510	M.F.RESISTOR	51	1/16W
R114	NRSA63J-331	M.G.RESISTOR	330	1/16W
R115	NRSA63J-471	M.G.RESISTOR	470	1/16W
R116	NRSA63J-681	M.G.RESISTOR	680	1/16W
R117	NRSA63J-101	M.G.RESISTOR	100	1/16W
R118	NRSA63J-105	M.G.RESISTOR	1.0M	1/16W
R119	NRSA63J-101	M.G.RESISTOR	100	1/16W
R120	NRSA63J-223	M.G.RESISTOR	22K	1/16W
R121	NRSA63J-183	M.G.RESISTOR	18K	1/16W
R122	NRSA63J-222	M.G.RESISTOR	2.2K	1/16W
R123	NRSA63J-152	M.G.RESISTOR	1.5K	1/16W
R124	NRSA63J-104	M.G.RESISTOR	100K	1/16W
R125	NRSA63J-221	M.G.RESISTOR	220	1/16W
R126	NRSA63J-102	M.G.RESISTOR	1.0K	1/16W
R127	NRSA63J-122	M.G.RESISTOR	1.2K	1/16W
R128	NRSA63J-122	M.G.RESISTOR	1.2K	1/16W
R129	NRSA63J-221	M.G.RESISTOR	220	1/16W
R130	NRSA63J-102	M.G.RESISTOR	1.0K	1/16W
R131	NRSA63J-122	M.G.RESISTOR	1.2K	1/16W
R132	NRSA63J-122	M.G.RESISTOR	1.2K	1/16W
R133	NRSA63J-471	M.G.RESISTOR	470	1/16W

Symbol No.	Part No.	Part Name	Description	
R134	NRSA63J-331	M.G.RESISTOR	330	1/16W
R135	NRSA63J-331	M.G.RESISTOR	330	1/16W
R136	NRSA63J-471	M.G.RESISTOR	470	1/16W
R137	NRSA63J-102	M.G.RESISTOR	1.0K	1/16W
R138	NRSA63J-101	M.G.RESISTOR	100	1/16W
R139	NRSA63J-0R0	M.G.RESISTOR	0	1/16W
R140	NRSA63J-101	M.G.RESISTOR	100	1/16W
R141	NRSA63J-101	M.G.RESISTOR	100	1/16W
R142	NRSA63J-471	M.G.RESISTOR	470	1/16W
R143	NRSA63J-471	M.G.RESISTOR	470	1/16W
R144	NRSA63J-331	M.G.RESISTOR	330	1/16W
R145	NRSA63J-331	M.G.RESISTOR	330	1/16W
R146	NRSA63J-471	M.G.RESISTOR	470	1/16W
R147	NRSA63J-101	M.G.RESISTOR	100	1/16W
R148	NRVA63D-223	M.F.RESISTOR	22K	1/16W
R149	NRSA63J-184	M.G.RESISTOR	180K	1/16W
R150	NRVA63D-682	M.F.RESISTOR	6.8K	1/16W
R151	NRVA63D-822	M.F.RESISTOR	8.2K	1/16W
R152	NRSA63J-103	M.G.RESISTOR	10K	1/16W
R155	NRSA63J-221	M.G.RESISTOR	220	1/16W
R156	NRSA63J-272	M.G.RESISTOR	2.7K	1/16W
R157	NRSA63J-102	M.G.RESISTOR	1.0K	1/16W
R158	NRSA63J-102	M.G.RESISTOR	1.0K	1/16W
R159	NRSA63J-122	M.G.RESISTOR	1.2K	1/16W
R160	NRSA63J-102	M.G.RESISTOR	1.0K	1/16W
R162	NRSA63J-152	M.G.RESISTOR	1.5K	1/16W
R163	NRSA63J-103	M.G.RESISTOR	10K	1/16W
R164	NRSA63J-104	M.G.RESISTOR	100K	1/16W
R165	NRSA63J-103	M.G.RESISTOR	10K	1/16W
R166	NRSA63J-472	M.G.RESISTOR	4.7K	1/16W
R167	NRSA63J-331	M.G.RESISTOR	330	1/16W
R168	NRSA63J-682	M.G.RESISTOR	6.8K	1/16W
R169	NRSA63J-331	M.G.RESISTOR	330	1/16W
R170	NRSA63J-682	M.G.RESISTOR	6.8K	1/16W
R171	NRSA63J-123	M.G.RESISTOR	12K	1/16W
R172	NRSA63J-103	M.G.RESISTOR	10K	1/16W
R201	NRSA63J-331	M.G.RESISTOR	330	1/16W
R202	NRSA63J-0R0	M.G.RESISTOR	0	1/16W
R203	NRSA63J-101	M.G.RESISTOR	100	1/16W
R204	NRSA63J-681	M.G.RESISTOR	680	1/16W
R205	NRSA63J-0R0	M.G.RESISTOR	0	1/16W
R206	NRSA63J-0R0	M.G.RESISTOR	0	1/16W
R208	NRSA63J-0R0	M.G.RESISTOR	0	1/16W
R209	NRSA63J-331	M.G.RESISTOR	330	1/16W
R210	NRSA63J-471	M.G.RESISTOR	470	1/16W
R212	NRSA63J-0R0	M.G.RESISTOR	0	1/16W
R222	NRSA63J-103	M.G.RESISTOR	10K	1/16W
R301	NRSA63J-151	M.G.RESISTOR	150	1/16W
R302	NRSA63J-151	M.G.RESISTOR	150	1/16W
R303	NRSA63J-393	M.G.RESISTOR	39K	1/16W
R304	NRSA63J-103	M.G.RESISTOR	10K	1/16W
R305	NRSA63J-152	M.G.RESISTOR	1.5K	1/16W
R306	NRSA63F-806	M.G.RESISTOR	80M	1/16W
R307	NRSA63F-182	M.G.RESISTOR	1.8K	1/16W
R308	NRSA63J-183	M.G.RESISTOR	18K	1/16W
R309	NRSA63J-223	M.G.RESISTOR	22K	1/16W
R310	NRSA63J-333	M.G.RESISTOR	33K	1/16W
R311	NRSA63J-221	M.G.RESISTOR	220	1/16W
R313	NRSA63J-103	M.G.RESISTOR	10K	1/16W
R314	NRSA63J-223	M.G.RESISTOR	22K	1/16W

Symbol No.	Part No.	Part Name	Description	
R315	NRVA63D-102	M.F.RESISTOR	1.0K	1/16W
R317	NRSA63J-102	M.G.RESISTOR	1.0K	1/16W
R318	NRSA63J-222	M.G.RESISTOR	2.2K	1/16W
R319	NRSA63J-101	M.G.RESISTOR	100	1/16W
R320	NRSA63J-272	M.G.RESISTOR	2.7K	1/16W
R321	NRSA63J-101	M.G.RESISTOR	100	1/16W
R322	NRSA63J-222	M.G.RESISTOR	2.2K	1/16W
R323	NRSA63J-392	M.G.RESISTOR	3.9K	1/16W
R324	NRSA63J-272	M.G.RESISTOR	2.7K	1/16W
R325	NRSA63J-681	M.G.RESISTOR	680	1/16W
R326	NRSA63J-101	M.G.RESISTOR	100	1/16W
R327	NRSA63J-101	M.G.RESISTOR	100	1/16W
R328	NRSA63J-182	M.G.RESISTOR	1.8K	1/16W
R329	NRSA63J-101	M.G.RESISTOR	100	1/16W
R330	NRSA63J-472	M.G.RESISTOR	4.7K	1/16W
R331	NRSA63J-472	M.G.RESISTOR	4.7K	1/16W
R332	NRSA63J-101	M.G.RESISTOR	100	1/16W
R333	NRSA63J-151	M.G.RESISTOR	150	1/16W
R334	NRSA63J-151	M.G.RESISTOR	150	1/16W
R335	NRSA63J-393	M.G.RESISTOR	39K	1/16W
R336	NRSA63J-103	M.G.RESISTOR	10K	1/16W
R337	NRSA63J-152	M.G.RESISTOR	1.5K	1/16W
R338	NRSA63F-806	M.G.RESISTOR	80M	1/16W
R339	NRSA63F-182	M.G.RESISTOR	1.8K	1/16W
R340	NRSA63J-183	M.G.RESISTOR	18K	1/16W
R341	NRSA63J-223	M.G.RESISTOR	22K	1/16W
R342	NRSA63J-333	M.G.RESISTOR	33K	1/16W
R343	NRSA63J-221	M.G.RESISTOR	220	1/16W
R344	NRSA63J-101	M.G.RESISTOR	100	1/16W
R345	NRSA63J-103	M.G.RESISTOR	10K	1/16W
R346	NRSA63J-392	M.G.RESISTOR	3.9K	1/16W
R347	NRSA63J-223	M.G.RESISTOR	22K	1/16W
R348	NRVA63D-102	M.F.RESISTOR	1.0K	1/16W
R350	NRSA63J-333	M.G.RESISTOR	33K	1/16W
R351	NRSA63J-103	M.G.RESISTOR	10K	1/16W
R352	NRSA63J-102	M.G.RESISTOR	1.0K	1/16W
R353	NRSA63J-222	M.G.RESISTOR	2.2K	1/16W
R354	NRSA63J-101	M.G.RESISTOR	100	1/16W
R355	NRSA63J-272	M.G.RESISTOR	2.7K	1/16W
R356	NRSA63J-101	M.G.RESISTOR	100	1/16W
R357	NRSA63J-222	M.G.RESISTOR	2.2K	1/16W
R358	NRSA63J-392	M.G.RESISTOR	3.9K	1/16W
R359	NRSA63J-272	M.G.RESISTOR	2.7K	1/16W
R360	NRSA63J-681	M.G.RESISTOR	680	1/16W
R361	NRSA63J-101	M.G.RESISTOR	100	1/16W
R362	NRSA63J-101	M.G.RESISTOR	100	1/16W
R363	NRSA63J-182	M.G.RESISTOR	1.8K	1/16W
R364	NRSA63J-101	M.G.RESISTOR	100	1/16W
R365	NRSA63J-272	M.G.RESISTOR	2.7K	1/16W
R366	NRSA63J-272	M.G.RESISTOR	2.7K	1/16W
R367	NRSA63J-101	M.G.RESISTOR	100	1/16W
R368	NRSA63J-151	M.G.RESISTOR	150	1/16W
R369	NRSA63J-151	M.G.RESISTOR	150	1/16W
R370	NRSA63J-393	M.G.RESISTOR	39K	1/16W
R371	NRSA63J-123	M.G.RESISTOR	12K	1/16W
R372	NRSA63J-152	M.G.RESISTOR	1.5K	1/16W
R373	NRSA63F-46R	M.G.RESISTOR	46	1/16W
R374	NRSA63F-232	M.G.RESISTOR	2.3K	1/16W
R376	NRSA63J-221	M.G.RESISTOR	220	1/16W
R377	NRSA63J-221	M.G.RESISTOR	220	1/16W

[ANA IN]

Symbol No.	Part No.	Part Name	Description	
R378	NRSA63J-123	M.G.RESISTOR	12K	1/16W
R379	NRSA63J-182	M.G.RESISTOR	1.8K	1/16W
R380	NRSA63J-152	M.G.RESISTOR	1.5K	1/16W
R382	NRVA63D-391	M.F.RESISTOR	390	1/16W
R384	NRSA63J-0R0	M.G.RESISTOR	0	1/16W
R385	NRSA63J-333	M.G.RESISTOR	33K	1/16W
R386	NRSA63J-103	M.G.RESISTOR	10K	1/16W
R387	NRSA63J-182	M.G.RESISTOR	1.8K	1/16W
R388	NRSA63J-222	M.G.RESISTOR	2.2K	1/16W
R389	NRSA63J-101	M.G.RESISTOR	100	1/16W
R390	NRSA63J-272	M.G.RESISTOR	2.7K	1/16W
R391	NRSA63J-101	M.G.RESISTOR	100	1/16W
R392	NRSA63J-222	M.G.RESISTOR	2.2K	1/16W
R393	NRSA63J-392	M.G.RESISTOR	3.9K	1/16W
R394	NRSA63J-272	M.G.RESISTOR	2.7K	1/16W
R395	NRSA63J-681	M.G.RESISTOR	660	1/16W
R396	NRSA63J-101	M.G.RESISTOR	100	1/16W
R397	NRSA63J-101	M.G.RESISTOR	100	1/16W
R398	NRSA63J-122	M.G.RESISTOR	1.2K	1/16W
R399	NRSA63J-101	M.G.RESISTOR	100	1/16W
R400	NRSA63J-101	M.G.RESISTOR	100	1/16W
R401	NRSA63J-472	M.G.RESISTOR	4.7K	1/16W
R402	NRSA63J-472	M.G.RESISTOR	4.7K	1/16W
R403	NRSA63J-472	M.G.RESISTOR	4.7K	1/16W
R404	NRSA63J-472	M.G.RESISTOR	4.7K	1/16W
R405	NRSA63J-101	M.G.RESISTOR	100	1/16W
R406	NRSA63J-103	M.G.RESISTOR	10K	1/16W
R407	NRSA63J-103	M.G.RESISTOR	10K	1/16W
R408	NRSA63J-103	M.G.RESISTOR	10K	1/16W
R409	NRSA63J-103	M.G.RESISTOR	10K	1/16W
R410	NRSA63J-103	M.G.RESISTOR	10K	1/16W
R411	NRSA63J-152	M.G.RESISTOR	1.5K	1/16W
R412	NRSA63J-472	M.G.RESISTOR	4.7K	1/16W
R413	NRSA63J-101	M.G.RESISTOR	100	1/16W
R414	NRSA63J-103	M.G.RESISTOR	10K	1/16W
R415	NRSA63J-153	M.G.RESISTOR	15K	1/16W
R416	NRSA63J-682	M.G.RESISTOR	6.8K	1/16W
R417	NRSA63J-103	M.G.RESISTOR	10K	1/16W
R418	NRSA63J-153	M.G.RESISTOR	15K	1/16W
R419	NRSA63J-682	M.G.RESISTOR	6.8K	1/16W
R420	NRSA63J-102	M.G.RESISTOR	1.0K	1/16W
R421	NRSA63J-102	M.G.RESISTOR	1.0K	1/16W
R423	NRSA63J-0R0	M.G.RESISTOR	0	1/16W
R424	NRSA63J-153	M.G.RESISTOR	15K	1/16W
R425	NRSA63J-103	M.G.RESISTOR	10K	1/16W
R426	NRSA63J-682	M.G.RESISTOR	6.8K	1/16W
R427	NRSA63J-153	M.G.RESISTOR	15K	1/16W
R428	NRSA63J-103	M.G.RESISTOR	10K	1/16W
R429	NRSA63J-682	M.G.RESISTOR	6.8K	1/16W
R430	NRSA63J-102	M.G.RESISTOR	1.0K	1/16W
R431	NRSA63J-122	M.G.RESISTOR	1.2K	1/16W
R432	NRSA63J-102	M.G.RESISTOR	1.0K	1/16W
R433	NRSA63J-102	M.G.RESISTOR	1.0K	1/16W
R434	NRSA63J-102	M.G.RESISTOR	1.0K	1/16W
R435	NRSA63J-223	M.G.RESISTOR	22K	1/16W
R436	NRSA63J-823	M.G.RESISTOR	82K	1/16W
R437	NRSA63J-684	M.G.RESISTOR	680K	1/16W
R438	NRSA63J-472	M.G.RESISTOR	4.7K	1/16W
R439	NRSA63J-272	M.G.RESISTOR	2.7K	1/16W
R440	NRSA63J-392	M.G.RESISTOR	3.9K	1/16W

Symbol No.	Part No.	Part Name	Description	
R441	NRSA63J-152	M.G.RESISTOR	1.5K	1/16W
R442	NRSA63J-152	M.G.RESISTOR	1.5K	1/16W
R443	NRSA63J-102	M.G.RESISTOR	1.0K	1/16W
R444	NRSA63J-333	M.G.RESISTOR	33K	1/16W
R445	NRSA63J-333	M.G.RESISTOR	33K	1/16W
R446	NRSA63J-562	M.G.RESISTOR	5.6K	1/16W
R447	NRSA63J-152	M.G.RESISTOR	1.5K	1/16W
R448	NRSA63J-821	M.G.RESISTOR	820	1/16W
R449	NRSA63J-101	M.G.RESISTOR	100	1/16W
R450	NRSA63J-101	M.G.RESISTOR	100	1/16W
R451	NRSA63J-101	M.G.RESISTOR	100	1/16W
R452	NRSA63J-392	M.G.RESISTOR	3.9K	1/16W
R453	NRSA63J-333	M.G.RESISTOR	33K	1/16W
R454	NRSA63J-103	M.G.RESISTOR	10K	1/16W
R455	NRVA63D-682	M.F.RESISTOR	6.8K	1/16W
R456	NRVA63D-682	M.F.RESISTOR	6.8K	1/16W
R457	NRVA63D-152	M.F.RESISTOR	1.5K	1/16W
R501	NRVA63D-102	M.F.RESISTOR	1.0K	1/16W
R503	NRSA63J-682	M.G.RESISTOR	6.8K	1/16W
R504	NRSA63J-392	M.G.RESISTOR	3.9K	1/16W
R505	NRSA63J-0R0	M.G.RESISTOR	0	1/16W
R506	NRSA63J-0R0	M.G.RESISTOR	0	1/16W
R507	NRSA63J-101	M.G.RESISTOR	100	1/16W
R508	NRVA63D-102	M.F.RESISTOR	1.0K	1/16W
R509	NRSA63J-0R0	M.G.RESISTOR	0	1/16W
R510	NRSA63J-682	M.G.RESISTOR	6.8K	1/16W
R511	NRSA63J-392	M.G.RESISTOR	3.9K	1/16W
R513	NRSA63J-0R0	M.G.RESISTOR	0	1/16W
R515	NRVA63D-391	M.F.RESISTOR	390	1/16W
R516	NRSA63J-222	M.G.RESISTOR	2.2K	1/16W
R517	NRSA63J-152	M.G.RESISTOR	1.5K	1/16W
R519	NRSA63J-0R0	M.G.RESISTOR	0	1/16W
R520	NRSA63J-101	M.G.RESISTOR	100	1/16W
R522	NRSA63J-0R0	M.G.RESISTOR	0	1/16W
R524	NRSA63J-0R0	M.G.RESISTOR	0	1/16W
R526	NRSA63J-0R0	M.G.RESISTOR	0	1/16W
R601	NRSA63J-750	M.G.RESISTOR	75	1/16W
R603	NRSA63J-182	M.G.RESISTOR	1.8K	1/16W
R604	NRSA63J-182	M.G.RESISTOR	1.8K	1/16W
R605	NRSA63J-103	M.G.RESISTOR	10K	1/16W
R606	NRSA63J-750	M.G.RESISTOR	75	1/16W
R608	NRSA63J-182	M.G.RESISTOR	1.8K	1/16W
R609	NRSA63J-182	M.G.RESISTOR	1.8K	1/16W
R610	NRSA63J-103	M.G.RESISTOR	10K	1/16W
R611	NRSA63J-750	M.G.RESISTOR	75	1/16W
R613	NRSA63J-182	M.G.RESISTOR	1.8K	1/16W
R614	NRSA63J-182	M.G.RESISTOR	1.8K	1/16W
R615	NRSA63J-103	M.G.RESISTOR	10K	1/16W
R617	NRSA63J-101	M.G.RESISTOR	100	1/16W
R618	NRSA63J-101	M.G.RESISTOR	100	1/16W
R619	NRSA63J-101	M.G.RESISTOR	100	1/16W
R620	NRSA63J-101	M.G.RESISTOR	100	1/16W
R621	NRSA63J-101	M.G.RESISTOR	100	1/16W
R625	NRSA63J-0R0	M.G.RESISTOR	0	1/16W
R629	NRSA63J-0R0	M.G.RESISTOR	0	1/16W
R632	NRSA63J-0R0	M.G.RESISTOR	0	1/16W
R635	NRSA63J-0R0	M.G.RESISTOR	0	1/16W
R639	NRSA63J-0R0	M.G.RESISTOR	0	1/16W
R642	NRSA63J-101	M.G.RESISTOR	100	1/16W
R643	NRSA63J-101	M.G.RESISTOR	100	1/16W

Symbol No.	Part No.	Part Name	Description	
R645	NRSA63J-101	M.G.RESISTOR	100	1/16W
R646	NRSA63J-101	M.G.RESISTOR	100	1/16W
R647	NRSA63J-101	M.G.RESISTOR	100	1/16W
R648	NRSA63J-101	M.G.RESISTOR	100	1/16W
R649	NRSA63J-101	M.G.RESISTOR	100	1/16W
R650	NRSA63J-101	M.G.RESISTOR	100	1/16W
R651	NRSA63J-101	M.G.RESISTOR	100	1/16W
R652	NRSA63J-101	M.G.RESISTOR	100	1/16W
R653	NRSA63J-101	M.G.RESISTOR	100	1/16W
R654	NRSA63J-101	M.G.RESISTOR	100	1/16W
R655	NRSA63J-101	M.G.RESISTOR	100	1/16W
R656	NRSA63J-101	M.G.RESISTOR	100	1/16W
R659	NRSA63J-101	M.G.RESISTOR	100	1/16W
R660	NRSA63J-101	M.G.RESISTOR	100	1/16W
R661	NRSA63J-0R0	M.G.RESISTOR	0	1/16W
R662	NRSA63J-101	M.G.RESISTOR	100	1/16W
R663	NRSA63J-221	M.G.RESISTOR	220	1/16W
R665	NRSA63J-103	M.G.RESISTOR	10K	1/16W
R666	NRSA63J-103	M.G.RESISTOR	10K	1/16W
R667	NRSA63J-103	M.G.RESISTOR	10K	1/16W
R668	NRSA63J-101	M.G.RESISTOR	100	1/16W
R669	NRSA63J-101	M.G.RESISTOR	100	1/16W
R670	NRSA63J-101	M.G.RESISTOR	100	1/16W
R671	NRSA63J-103	M.G.RESISTOR	10K	1/16W
R672	NRSA63J-103	M.G.RESISTOR	10K	1/16W
R673	NRSA63J-333	M.G.RESISTOR	33K	1/16W
R674	NRVA63D-912	M.F.RESISTOR	9.1K	1/16W
R675	NRVA63D-473	M.F.RESISTOR	47K	1/16W
R676	NRVA63D-333	M.F.RESISTOR	33K	1/16W
R677	NRSA63J-471	M.G.RESISTOR	470	1/16W
R678	NRSA63J-223	M.G.RESISTOR	22K	1/16W
R679	NRVA63D-153	M.F.RESISTOR	15K	1/16W
R680	NRVA63D-472	M.F.RESISTOR	4.7K	1/16W
R681	NRSA63J-101	M.G.RESISTOR	100	1/16W
R682	NRSA63J-472	M.G.RESISTOR	4.7K	1/16W
R683	NRSA63J-472	M.G.RESISTOR	4.7K	1/16W
R684	NRSA63J-101	M.G.RESISTOR	100	1/16W
R685	NRSA63J-101	M.G.RESISTOR	100	1/16W
R686	NRSA63J-101	M.G.RESISTOR	100	1/16W
R687	NRSA63J-101	M.G.RESISTOR	100	1/16W
R711	NRSA63J-332	M.G.RESISTOR	3.3K	1/16W
R712	NRSA63J-122	M.G.RESISTOR	1.2K	1/16W
R716	NRSA63J-0R0	M.G.RESISTOR	0	1/16W
R718	NRSA63J-0R0	M.G.RESISTOR	0	1/16W
R721	NRSA63J-101	M.G.RESISTOR	100	1/16W
R727	NRSA63J-101	M.G.RESISTOR	100	1/16W
R728	NRSA63J-101	M.G.RESISTOR	100	1/16W
R729	NRSA63J-101	M.G.RESISTOR	100	1/16W
R732	NRSA63J-0R0	M.G.RESISTOR	0	1/16W
R733	NRSA63J-272	M.G.RESISTOR	2.7K	1/16W
R734	NRSA63J-562	M.G.RESISTOR	5.6K	1/16W
R735	NRSA63J-272	M.G.RESISTOR	2.7K	1/16W
R736	NRSA63J-562	M.G.RESISTOR	5.6K	1/16W
R740	NRSA63J-472	M.G.RESISTOR	4.7K	1/16W
VR1	NVP1416-501	TRIM.RESISTOR	COMB C	
VR2	NVP1416-501	TRIM.RESISTOR	COMB Y	
VR3	NVP1416-501	TRIM.RESISTOR	YC Y LEV	
VR4	NVP1415-103	TRIM.RESISTOR	C DET	

Symbol No.	Part No.	Part Name	Description	
VR5	NVP1416-501	TRIM.RESISTOR	DEC R LEV	
VR6	NVP1416-501	TRIM.RESISTOR	DEC B LEV	
VR7	NVP1416-203	TRIM.RESISTOR	HUE OF S1	
VR8	NVP1416-103	TRIM.RESISTOR	HUE OF S2	
VR9	NVP1416-103	TRIM.RESISTOR	B BLK	
VR10	NVP1416-103	TRIM.RESISTOR	R BLK	
VR301	NVP1416-501	TRIM.RESISTOR	R LEV	
VR302	NVP1416-501	TRIM.RESISTOR	B LEV	
VR303	NVP1416-501	TRIM.RESISTOR	Y LEV	
VR304	NVP1415-103	TRIM.RESISTOR	B DL	
VR305	NVP1415-103	TRIM.RESISTOR	YC B DL	
VR306	NVP1415-103	TRIM.RESISTOR	YC R DL	
VR307	NVP1415-103	TRIM.RESISTOR	R DL	
VR308	NVP1415-103	TRIM.RESISTOR	VITC DC	
VR601	NVP1416-502	TRIM.RESISTOR	CP Y	
VR602	NVP1416-502	TRIM.RESISTOR	CP R	
VR603	NVP1416-502	TRIM.RESISTOR	CP B	
VR604	NVP1416-202	TRIM.RESISTOR	PS DC	
RA301	NRB045J-101	R.NETWORK		
RA302	NRB045J-101	R.NETWORK		
RA601	NRB045J-101	R.NETWORK		
RA602	NRB045J-101	R.NETWORK		
RA603	NRB045J-101	R.NETWORK		
RA604	NRB045J-101	R.NETWORK		
RA605	NRB045J-101	R.NETWORK		
RA606	NRB045J-101	R.NETWORK		
RA607	NRB045J-101	R.NETWORK		
RA608	NRB045J-101	R.NETWORK		
RA609	NRB045J-101	R.NETWORK		
RA610	NRB045J-101	R.NETWORK		
RA611	NRB045J-101	R.NETWORK		
RA612	NRB045J-101	R.NETWORK		
RA613	NRB045J-101	R.NETWORK		
RA614	NRB045J-101	R.NETWORK		
RA615	NRB045J-101	R.NETWORK		
RA616	NRB045J-101	R.NETWORK		
C1	NCB31HK-103	CER.CAPACITOR	0.010	50V
C2	NCB31HK-103	CER.CAPACITOR	0.010	50V
C3	NEH91CM-476	E.CAPACITOR	47	16V
C4	NEZ0001-107	E.CAPACITOR	100	
C5	NEZ0001-107	E.CAPACITOR	100	
C6	NCB31HK-103	CER.CAPACITOR	0.010	50V
C7	NCB31HK-103	CER.CAPACITOR	0.010	50V
C8	NCB31HK-103	CER.CAPACITOR	0.010	50V
C9	NEZ0001-107	E.CAPACITOR	100	
C10	NCB31HK-103	CER.CAPACITOR	0.010	50V
C11	NEZ0001-107	E.CAPACITOR	100	
C12	NCB31HK-103	CER.CAPACITOR	0.010	50V
C13	NCB31HK-103	CER.CAPACITOR	0.010	50V
C14	NCB31HK-103	CER.CAPACITOR	0.010	50V
C15	NCB31HK-103	CER.CAPACITOR	0.010	50V
C16	NCB31HK-103	CER.CAPACITOR	0.010	50V
C17	NEH91CM-476	E.CAPACITOR	47	16V
C18	NCB31HK-103	CER.CAPACITOR	0.010	50V
C19	NCB31HK-103	CER.CAPACITOR	0.010	50V
C20	NEH91CM-476	E.CAPACITOR	47	16V

[ANA IN]

Symbol No.	Part No.	Part Name	Description	
C21	NEZ0001-107	E.CAPACITOR	100	
C22	NEH90JM-336	E.CAPACITOR	33	6.3V
C24	NCS31HJ-100	CER.CAPACITOR	10P	50V
C26	NCB31HK-103	CER.CAPACITOR	0.010	50V
C27	NCB31HK-103	CER.CAPACITOR	0.010	50V
C28	NCS31HJ-271	CER.CAPACITOR	270P	50V
C29	NCS31HJ-121	CER.CAPACITOR	120P	50V
C30	NEN21HM-105	NP.CAPACITOR	1.0	50V
C31	NCS31HJ-560	CER.CAPACITOR	56P	50V
C32	NCS31HJ-101	CER.CAPACITOR	100P	50V
C33	NCB31HK-103	CER.CAPACITOR	0.010	50V
C34	NCB31HK-103	CER.CAPACITOR	0.010	50V
C35	NCB31HK-103	CER.CAPACITOR	0.010	50V
C36	NEZ0001-107	E.CAPACITOR	100	
C37	NCB31HK-103	CER.CAPACITOR	0.010	50V
C38	NCB31HK-103	CER.CAPACITOR	0.010	50V
C39	NEZ0001-107	E.CAPACITOR	100	
C40	NCB31HK-103	CER.CAPACITOR	0.010	50V
C41	NCF31CZ-104	CER.CAPACITOR	0.10	16V
C42	NCF31CZ-104	CER.CAPACITOR	0.10	16V
C43	NCB31HK-103	CER.CAPACITOR	0.010	50V
C44	NCB31HK-103	CER.CAPACITOR	0.010	50V
C45	NEZ0001-107	E.CAPACITOR	100	
C46	NCF31CZ-104	CER.CAPACITOR	0.10	16V
C47	NCF31CZ-104	CER.CAPACITOR	0.10	16V
C48	NCF31CZ-104	CER.CAPACITOR	0.10	16V
C49	NCF31CZ-104	CER.CAPACITOR	0.10	16V
C50	NCS31HJ-180	CER.CAPACITOR	18P	50V
C51	NCF31CZ-104	CER.CAPACITOR	0.10	16V
C52	NCS31EJ-102	CER.CAPACITOR	1000P	25V
C53	NCB31HK-103	CER.CAPACITOR	0.010	50V
C54	NCB31HK-103	CER.CAPACITOR	0.010	50V
C55	NCF31CZ-104	CER.CAPACITOR	0.10	16V
C56	NCB31HK-103	CER.CAPACITOR	0.010	50V
C57	NEZ0001-107	E.CAPACITOR		
C58	NCB31HK-103	CER.CAPACITOR	0.010	50V
C59	NCB31HK-103	CER.CAPACITOR	0.010	50V
C60	NEH91CM-476	E.CAPACITOR	47	16V
C61	NCF31CZ-104	CER.CAPACITOR	0.10	16V
C62	NCB31HK-103	CER.CAPACITOR	0.010	50V
C63	NCB31HK-103	CER.CAPACITOR	0.010	50V
C64	NEH91CM-476	E.CAPACITOR	47	16V
C67	NCS31HJ-100	CER.CAPACITOR	10P	50V
C68	NCS31HJ-120	CER.CAPACITOR	12P	50V
C69	NCF31CZ-104	CER.CAPACITOR	0.10	16V
C70	NCF31CZ-104	CER.CAPACITOR	0.10	16V
C71	NCB31HK-103	CER.CAPACITOR	0.010	50V
C72	NCB31HK-103	CER.CAPACITOR	0.010	50V
C73	NCF31CZ-104	CER.CAPACITOR	0.10	16V
C74	NCS31HJ-150	CER.CAPACITOR	15P	50V
C75	NCF31CZ-104	CER.CAPACITOR	0.10	16V
C76	NCB31HK-103	CER.CAPACITOR	0.010	50V
C77	NCB31HK-103	CER.CAPACITOR	0.010	50V
C78	NEH91CM-476	E.CAPACITOR	47	16V
C79	NEH90JM-107	E.CAPACITOR	100	6.3V
C82	NCS31HJ-100	CER.CAPACITOR	10P	50V
C83	NCS31HJ-120	CER.CAPACITOR	12P	50V
C84	NEZ0001-107	E.CAPACITOR	100	
C85	NEZ0001-107	E.CAPACITOR	100	
C86	NCB31HK-103	CER.CAPACITOR	0.010	50V

Symbol No.	Part No.	Part Name	Description	
C87	NCS31HJ-271	CER.CAPACITOR	270P	50V
C88	NCS31HJ-121	CER.CAPACITOR	120P	50V
C93	NEH91HM-105	E.CAPACITOR	1.0	50V
C94	NEH91EM-475	E.CAPACITOR	4.7	25V
C95	NFV41CJ-473	FILM CAPACITOR	0.047	16V
C96	NFV41CJ-473	FILM CAPACITOR	0.047	16V
C97	NEZ0001-107	E.CAPACITOR	100	
C98	NCB31HK-103	CER.CAPACITOR	0.010	50V
C99	NCF31CZ-104	CER.CAPACITOR	0.10	16V
C100	NCF31CZ-104	CER.CAPACITOR	0.10	16V
C101	NEH91HM-105	E.CAPACITOR	1.0	50V
C102	NCS31EJ-102	CER.CAPACITOR	1000P	25V
C103	NCS31EJ-102	CER.CAPACITOR	1000P	25V
C104	NCB31HK-103	CER.CAPACITOR	0.010	50V
C105	NEH91CM-476	E.CAPACITOR	47	16V
C106	NCB31HK-103	CER.CAPACITOR	0.010	50V
C107	NCB31HK-103	CER.CAPACITOR	0.010	50V
C108	NCB31CK-473	CER.CAPACITOR	0.047	16V
C109	NEH91CM-476	E.CAPACITOR	47	16V
C110	NCS31HJ-100	CER.CAPACITOR	10P	50V
C111	NCS31EJ-102	CER.CAPACITOR	1000P	25V
C112	NCS31EJ-102	CER.CAPACITOR	1000P	25V
C113	NCB31HK-103	CER.CAPACITOR	0.010	50V
C114	NEZ0001-107	E.CAPACITOR	100	
C115	NCB31HK-103	CER.CAPACITOR	0.010	50V
C116	NCB31HK-103	CER.CAPACITOR	0.010	50V
C117	NCF31CZ-104	CER.CAPACITOR	0.10	16V
C118	NCB31HK-103	CER.CAPACITOR	0.010	50V
C119	NCF31CZ-104	CER.CAPACITOR	0.10	16V
C120	NEZ0001-107	E.CAPACITOR	100	
C121	NEZ0001-107	E.CAPACITOR	100	
C122	NCB31HK-103	CER.CAPACITOR	0.010	50V
C123	NCS31HJ-150	CER.CAPACITOR	15P	50V
C126	NCB31HK-103	CER.CAPACITOR	0.010	50V
C127	NCB31HK-103	CER.CAPACITOR	0.010	50V
C130	NCS31HJ-150	CER.CAPACITOR	15P	50V
C131	NEZ0001-107	E.CAPACITOR	100	
C132	NCB31HK-103	CER.CAPACITOR	0.010	50V
C133	NCB31HK-103	CER.CAPACITOR	0.010	50V
C134	NEZ0001-107	E.CAPACITOR	100	
C135	NCB31HK-103	CER.CAPACITOR	0.010	50V
C136	NCB31HK-103	CER.CAPACITOR	0.010	50V
C137	NCB31HK-103	CER.CAPACITOR	0.010	50V
C138	NFV41HJ-272	FILM CAPACITOR	2700P	50V
C139	NCB31HK-103	CER.CAPACITOR	0.010	50V
C140	NCB31HK-103	CER.CAPACITOR	0.010	50V
C141	NCS31HJ-471	CER.CAPACITOR	470P	50V
C142	NCB31HK-103	CER.CAPACITOR	0.010	50V
C143	NCS31HJ-471	CER.CAPACITOR	470P	50V
C144	NCS31HJ-151	CER.CAPACITOR	150P	50V
C147	NEZ0001-107	E.CAPACITOR	100	
C148	NCB31HK-103	CER.CAPACITOR	0.010	50V
C149	NCB31HK-103	CER.CAPACITOR	0.010	50V
C150	NCS31HJ-271	CER.CAPACITOR	270P	50V
C151	NCS31HJ-121	CER.CAPACITOR	120P	50V
C152	NFV41HJ-102	FILM CAPACITOR	1000P	50V
C153	NCB31HK-103	CER.CAPACITOR	0.010	50V
C154	NFV41HJ-102	FILM CAPACITOR	1000P	50V
C155	NFV41HJ-102	FILM CAPACITOR	1000P	50V
C156	NCB31HK-103	CER.CAPACITOR	0.010	50V

Symbol No.	Part No.	Part Name	Description	
C157	NEN21VM-225	NP.CAPACITOR	2.2	35V
C158	NEZ0001-107	E.CAPACITOR	100	
C159	NEH91CM-476	E.CAPACITOR	47	16V
C160	NCB31HK-103	CER.CAPACITOR	0.010	50V
C161	NCB31HK-103	CER.CAPACITOR	0.010	50V
C162	NEZ0001-107	E.CAPACITOR	100	
C163	NCB31HK-103	CER.CAPACITOR	0.010	50V
C164	NCB31HK-103	CER.CAPACITOR	0.010	50V
C201	NCS31HJ-101	CER.CAPACITOR	100P	50V
C301	NCB31HK-103	CER.CAPACITOR	0.010	50V
C302	NCB31HK-103	CER.CAPACITOR	0.010	50V
C303	NEH91CM-476	E.CAPACITOR	47	16V
C304	NEZ0001-107	E.CAPACITOR	100	
C305	NEZ0001-107	E.CAPACITOR	100	
C306	NEZ0001-107	E.CAPACITOR	100	
C307	NEZ0001-107	E.CAPACITOR	100	
C308	NCB31HK-103	CER.CAPACITOR	0.010	50V
C309	NCB31HK-103	CER.CAPACITOR	0.010	50V
C310	NCB31HK-103	CER.CAPACITOR	0.010	50V
C311	NEZ0001-107	E.CAPACITOR	100	
C312	NEZ0001-107	E.CAPACITOR	100	
C313	NCB31HK-103	CER.CAPACITOR	0.010	50V
C314	NCB31HK-103	CER.CAPACITOR	0.010	50V
C315	NCB31HK-103	CER.CAPACITOR	0.010	50V
C316	NCB31HK-103	CER.CAPACITOR	0.010	50V
C317	NEH91CM-476	E.CAPACITOR	47	16V
C318	NCB31HK-103	CER.CAPACITOR	0.010	50V
C319	NCB31HK-103	CER.CAPACITOR	0.010	50V
C320	NEZ0001-107	E.CAPACITOR	100	
C321	NEZ0001-107	E.CAPACITOR	100	
C322	NCS31HJ-221	CER.CAPACITOR	220P	50V
C323	NEZ0001-107	E.CAPACITOR	100	
C324	NCB31HK-103	CER.CAPACITOR	0.010	50V
C325	NFV41HJ-102	FILM CAPACITOR	1000P	50V
C326	NCB31HK-103	CER.CAPACITOR	0.010	50V
C327	NFV41CJ-473	FILM CAPACITOR	0.047	16V
C328	NCF31CZ-104	CER.CAPACITOR	0.10	16V
C329	NEZ0001-107	E.CAPACITOR	100	
C330	NCS31HJ-680	CER.CAPACITOR	68P	50V
C331	NCB31HK-103	CER.CAPACITOR	0.010	50V
C333	NCB31HK-103	CER.CAPACITOR	0.010	50V
C334	NCB31HK-103	CER.CAPACITOR	0.010	50V
C335	NCB31HK-103	CER.CAPACITOR	0.010	50V
C336	NEZ0001-107	E.CAPACITOR	100	
C337	NCB31HK-103	CER.CAPACITOR	0.010	50V
C338	NCB31HK-103	CER.CAPACITOR	0.010	50V
C339	NEZ0001-107	E.CAPACITOR	100	
C340	NEZ0001-107	E.CAPACITOR	100	
C341	NEZ0001-107	E.CAPACITOR	100	
C342	NEZ0001-107	E.CAPACITOR	100	
C343	NCB31HK-103	CER.CAPACITOR	0.010	50V
C344	NEZ0001-107	E.CAPACITOR	100	
C345	NCB31HK-103	CER.CAPACITOR	0.010	50V
C346	NCB31HK-103	CER.CAPACITOR	0.010	50V
C347	NCB31HK-103	CER.CAPACITOR	0.010	50V
C348	NCB31HK-103	CER.CAPACITOR	0.010	50V
C349	NEH91CM-476	E.CAPACITOR	47	16V
C350	NCB31HK-103	CER.CAPACITOR	0.010	50V
C351	NCB31HK-103	CER.CAPACITOR	0.010	50V
C352	NEZ0001-107	E.CAPACITOR	100	

Symbol No.	Part No.	Part Name	Description	
C353	NEZ0001-107	E.CAPACITOR	100	
C354	NCS31HJ-221	CER.CAPACITOR	220P	50V
C355	NEZ0001-107	E.CAPACITOR	100	
C356	NCB31HK-103	CER.CAPACITOR	0.010	50V
C357	NFV41HJ-102	FILM CAPACITOR	1000P	50V
C358	NCB31HK-103	CER.CAPACITOR	0.010	50V
C359	NFV41CJ-473	FILM CAPACITOR	0.047	16V
C360	NCF31CZ-104	CER.CAPACITOR	0.10	16V
C361	NEZ0001-107	E.CAPACITOR	100	
C362	NCS31HJ-680	CER.CAPACITOR	68P	50V
C363	NCB31HK-103	CER.CAPACITOR	0.010	50V
C365	NCB31HK-103	CER.CAPACITOR	0.010	50V
C366	NCB31HK-103	CER.CAPACITOR	0.010	50V
C367	NEZ0001-107	E.CAPACITOR	100	
C368	NEZ0001-107	E.CAPACITOR	100	
C369	NEZ0001-107	E.CAPACITOR	100	
C370	NEZ0001-107	E.CAPACITOR	100	
C371	NCB31HK-103	CER.CAPACITOR	0.010	50V
C372	NEZ0001-107	E.CAPACITOR	100	
C373	NCB31HK-103	CER.CAPACITOR	0.010	50V
C374	NCB31HK-103	CER.CAPACITOR	0.010	50V
C375	NEH91CM-476	E.CAPACITOR	47	16V
C376	NCB31HK-103	CER.CAPACITOR	0.010	50V
C377	NCB31HK-103	CER.CAPACITOR	0.010	50V
C378	NEZ0001-107	E.CAPACITOR	100	
C379	NEH90JM-336	E.CAPACITOR	33	6.3V
C381	NEZ0001-107	E.CAPACITOR	100	
C382	NCB31HK-103	CER.CAPACITOR	0.010	50V
C383	NFV41HJ-102	FILM CAPACITOR	1000P	50V
C384	NCB31HK-103	CER.CAPACITOR	0.010	50V
C385	NFV41CJ-473	FILM CAPACITOR	0.047	16V
C386	NCF31CZ-104	CER.CAPACITOR	0.10	16V
C387	NEZ0001-107	E.CAPACITOR	100	
C388	NCS31HJ-270	CER.CAPACITOR	27P	50V
C389	NCB31HK-103	CER.CAPACITOR	0.010	50V
C391	NCB31HK-103	CER.CAPACITOR	0.010	50V
C392	NCB31HK-103	CER.CAPACITOR	0.010	50V
C393	NCB31HK-103	CER.CAPACITOR	0.010	50V
C394	NCB31HK-103	CER.CAPACITOR	0.010	50V
C395	NCB31HK-103	CER.CAPACITOR	0.010	50V
C396	NEZ0001-107	E.CAPACITOR	100	
C397	NCB31HK-103	CER.CAPACITOR	0.010	50V
C398	NCB31HK-103	CER.CAPACITOR	0.010	50V
C399	NCB31HK-103	CER.CAPACITOR	0.010	50V
C400	NCB31HK-103	CER.CAPACITOR	0.010	50V
C401	NCB31HK-103	CER.CAPACITOR	0.010	50V
C402	NCB31HK-103	CER.CAPACITOR	0.010	50V
C403	NCB31HK-103	CER.CAPACITOR	0.010	50V
C404	NEZ0001-107	E.CAPACITOR	100	
C405	NCS31HJ-271	CER.CAPACITOR	270P	50V
C406	NCS31HJ-121	CER.CAPACITOR	120P	50V
C407	NCF31CZ-104	CER.CAPACITOR	0.10	16V
C408	NCF31CZ-104	CER.CAPACITOR	0.10	16V
C409	NFV41CJ-104	FILM CAPACITOR	0.10	16V
C410	NCB31HK-103	CER.CAPACITOR	0.010	50V
C411	NCF31CZ-104	CER.CAPACITOR	0.10	16V
C412	NEH91HM-105	E.CAPACITOR	1.0	50V
C413	NCB31HK-103	CER.CAPACITOR	0.010	50V
C414	NCS31HJ-331	CER.CAPACITOR	330P	50V
C415	NCS31HJ-391	CER.CAPACITOR	390P	50V

[ANA IN]

Symbol No.	Part No.	Part Name	Description	
C416	NCB31HK-103	CER.CAPACITOR	0.010	50V
C417	NCS31HJ-560	CER.CAPACITOR	56P	50V
C418	NCF31CZ-104	CER.CAPACITOR	0.10	16V
C419	NCB31HK-103	CER.CAPACITOR	0.010	50V
C420	NCB31HK-103	CER.CAPACITOR	0.010	50V
C421	NCB31HK-103	CER.CAPACITOR	0.010	50V
C601	NCB31HK-103	CER.CAPACITOR	0.010	50V
C602	NCB31HK-103	CER.CAPACITOR	0.010	50V
C603	NEZ0001-107	E.CAPACITOR	100	
C604	NCB31HK-103	CER.CAPACITOR	0.010	50V
C605	NEH91EM-475	E.CAPACITOR	4.7	25V
C606	NCF31CZ-104	CER.CAPACITOR	0.10	16V
C607	NCB31HK-103	CER.CAPACITOR	0.010	50V
C608	NCB31HK-103	CER.CAPACITOR	0.010	50V
C610	NEZ0001-107	E.CAPACITOR	100	
C611	NCB31HK-103	CER.CAPACITOR	0.010	50V
C612	NEH91EM-475	E.CAPACITOR	4.7	25V
C613	NCB31HK-103	CER.CAPACITOR	0.010	50V
C614	NCB31HK-103	CER.CAPACITOR	0.010	50V
C615	NEZ0001-107	E.CAPACITOR	100	
C616	NCB31HK-103	CER.CAPACITOR	0.010	50V
C617	NEH91EM-475	E.CAPACITOR	4.7	25V
C618	NCB31HK-103	CER.CAPACITOR	0.010	50V
C619	NCF31CZ-104	CER.CAPACITOR	0.10	16V
C620	NCB31HK-103	CER.CAPACITOR	0.010	50V
C622	NEZ0001-107	E.CAPACITOR	100	
C623	NCB31HK-103	CER.CAPACITOR	0.010	50V
C624	NEH91EM-475	E.CAPACITOR	4.7	25V
C625	NCB31HK-103	CER.CAPACITOR	0.010	50V
C626	NCB31HK-103	CER.CAPACITOR	0.010	50V
C627	NEZ0001-107	E.CAPACITOR	100	
C628	NCB31HK-103	CER.CAPACITOR	0.010	50V
C629	NEH91EM-475	E.CAPACITOR	4.7	25V
C630	NCB31HK-103	CER.CAPACITOR	0.010	50V
C631	NCF31CZ-104	CER.CAPACITOR	0.10	16V
C632	NCB31HK-103	CER.CAPACITOR	0.010	50V
C634	NEZ0001-107	E.CAPACITOR	100	
C635	NCB31HK-103	CER.CAPACITOR	0.010	50V
C636	NEH91EM-475	E.CAPACITOR	4.7	25V
C637	NCB31HK-103	CER.CAPACITOR	0.010	50V
C638	NCB31HK-103	CER.CAPACITOR	0.010	50V
C639	NEZ0001-107	E.CAPACITOR	100	
C640	NCB31HK-103	CER.CAPACITOR	0.010	50V
C641	NCB31HK-103	CER.CAPACITOR	0.010	50V
C642	NCB31HK-103	CER.CAPACITOR	0.010	50V
C643	NCB31HK-103	CER.CAPACITOR	0.010	50V
C645	NCB31HK-103	CER.CAPACITOR	0.010	50V
C646	NCB31HK-103	CER.CAPACITOR	0.010	50V
C647	NCB31HK-103	CER.CAPACITOR	0.010	50V
C648	NCB31HK-103	CER.CAPACITOR	0.010	50V
C649	NCB31HK-103	CER.CAPACITOR	0.010	50V
C650	NEZ0001-107	E.CAPACITOR	100	
C651	NCB31HK-103	CER.CAPACITOR	0.010	50V
C652	NCB31HK-103	CER.CAPACITOR	0.010	50V
C653	NCB31HK-103	CER.CAPACITOR	0.010	50V
C654	NCB31HK-103	CER.CAPACITOR	0.010	50V
C655	NCB31HK-103	CER.CAPACITOR	0.010	50V
C656	NCB31HK-103	CER.CAPACITOR	0.010	50V
C657	NCB31HK-103	CER.CAPACITOR	0.010	50V
C658	NCB31HK-103	CER.CAPACITOR	0.010	50V

Symbol No.	Part No.	Part Name	Description	
C659	NEZ0001-107	E.CAPACITOR	100	
C660	NCB31HK-103	CER.CAPACITOR	0.010	50V
C662	NCB31HK-103	CER.CAPACITOR	0.010	50V
C663	NCB31HK-103	CER.CAPACITOR	0.010	50V
C664	NCB31HK-103	CER.CAPACITOR	0.010	50V
C665	NCB31HK-103	CER.CAPACITOR	0.010	50V
C666	NEH90JM-107	E.CAPACITOR	100	6.3V
C667	NCB31HK-103	CER.CAPACITOR	0.010	50V
C668	NEF11EM-474	TAN.CAPACITOR	0.47	25V
C669	NCS31HJ-6R0	CER.CAPACITOR	6.0P	50V
C670	NCS31HJ-100	CER.CAPACITOR	10P	50V
C671	NCB31HK-103	CER.CAPACITOR	0.010	50V
C672	NCS31HJ-100	CER.CAPACITOR	10P	50V
C673	NCS31HJ-101	CER.CAPACITOR	100P	50V
C674	NCF31CZ-104	CER.CAPACITOR	0.10	16V
C675	NCB31HK-103	CER.CAPACITOR	0.010	50V
C676	NCB31HK-103	CER.CAPACITOR	0.010	50V
C677	NCB31HK-103	CER.CAPACITOR	0.010	50V
C678	NCB31HK-103	CER.CAPACITOR	0.010	50V
C679	NCB31HK-103	CER.CAPACITOR	0.010	50V
C680	NEH91CM-476	E.CAPACITOR	47	16V
C681	NCB31HK-103	CER.CAPACITOR	0.010	50V
C682	NCB31HK-103	CER.CAPACITOR	0.010	50V
C683	NEZ0001-107	E.CAPACITOR	100	
C684	NCB31HK-103	CER.CAPACITOR	0.010	50V
C685	NCB31HK-103	CER.CAPACITOR	0.010	50V
C686	NEH91CM-476	E.CAPACITOR	47	16V
C687	NCB31HK-103	CER.CAPACITOR	0.010	50V
C688	NCB31HK-103	CER.CAPACITOR	0.010	50V
C689	NFV41CJ-104	FILM CAPACITOR	0.10	16V
C690	NCB31HK-103	CER.CAPACITOR	0.010	50V
C691	NCF31CZ-104	CER.CAPACITOR	0.10	16V
C692	NCS31HJ-470	CER.CAPACITOR	47P	50V
C693	NCS31HJ-151	CER.CAPACITOR	150P	50V
C694	NCB31HK-103	CER.CAPACITOR	0.010	50V
C695	NCB31HK-103	CER.CAPACITOR	0.010	50V
C696	NCB31HK-103	CER.CAPACITOR	0.010	50V
C697	NCS31EJ-102	CER.CAPACITOR	1000P	25V
C698	NCB31HK-103	CER.CAPACITOR	0.010	50V
C699	NEZ0001-107	E.CAPACITOR	100	
C700	NCB31HK-103	CER.CAPACITOR	0.010	50V
C701	NCB31HK-103	CER.CAPACITOR	0.010	50V
C702	NCB31HK-103	CER.CAPACITOR	0.010	50V
C703	NCB31HK-103	CER.CAPACITOR	0.010	50V
C704	NCB31HK-103	CER.CAPACITOR	0.010	50V
C705	NCB31HK-103	CER.CAPACITOR	0.010	50V
C706	NCB31HK-103	CER.CAPACITOR	0.010	50V
C711	NCB31HK-103	CER.CAPACITOR	0.010	50V
C712	NCB31HK-103	CER.CAPACITOR	0.010	50V
C713	NCB31HK-103	CER.CAPACITOR	0.010	50V
C714	NCB31HK-103	CER.CAPACITOR	0.010	50V
C715	NCB31HK-103	CER.CAPACITOR	0.010	50V
VC1	NAT3112-300	TRIM.CAPACITOR	30P	DEC VOL
L1	PU58201-100	COIL	10μ	
L2	PU58201-150	COIL	15μ	
L3	PU58201-270	COIL	27μ	

Symbol No.	Part No.	Part Name	Description
L4	PU58201-100	COIL	10μ
L5	PU58201-150	COIL	15μ
L6	PU58201-270	COIL	27μ
L7	PU58201-270	COIL	27μ
L601	PU58201-1R2	COIL	1.2μ
LC1	PGZ01972	NOISE FILTER	
LC2	PGZ01972	NOISE FILTER	
LC301	PGZ01972	NOISE FILTER	
LC601	PGZ01972	NOISE FILTER	
LC602	PGZ01972	NOISE FILTER	
LC603	PGZ01972	NOISE FILTER	
LC604	PGZ01972	NOISE FILTER	
LC605	PGZ01972	NOISE FILTER	
LC606	PGZ01972	NOISE FILTER	
LC607	PGZ01972	NOISE FILTER	
DL301	PGZ02184	DELAY LINE	
DL302	PGZ02184	DELAY LINE	
X1	PU60747	CRYSTAL	14.31818MHz
CN1	PGZ02142-120	CONNECTOR	120PIN
CN2	PGZ02142-100	CONNECTOR	100PIN
TP1	SCV1880-001	TEST POINT	
TP2	SCV1880-001	TEST POINT	
TP3	SCV1880-001	TEST POINT	
TP4	SCV1880-001	TEST POINT	
TP5	SCV1880-001	TEST POINT	
TP6	SCV1880-001	TEST POINT	
TP7	SCV1880-001	TEST POINT	
TP8	SCV1880-001	TEST POINT	
TP9	SCV1880-001	TEST POINT	
TP10	SCV1880-001	TEST POINT	
TP11	SCV1880-001	TEST POINT	
TP12	SCV1880-001	TEST POINT	
TP13	SCV1880-001	TEST POINT	
TP14	SCV1880-001	TEST POINT	
TP15	SCV1880-001	TEST POINT	
TP16	SCV1880-001	TEST POINT	
TP17	SCV1880-001	TEST POINT	
TP18	SCV1880-001	TEST POINT	
TP19	SCV1880-001	TEST POINT	
TP20	SCV1880-001	TEST POINT	
TP21	SCV1880-001	TEST POINT	
TP22	SCV1880-001	TEST POINT	
TP23	SCV1880-001	TEST POINT	
TP51	SCV1880-001	TEST POINT	
TP52	SCV1880-001	TEST POINT	
TP53	SCV1880-001	TEST POINT	
TP54	SCV1880-001	TEST POINT	
TP55	SCV1880-001	TEST POINT	
TP56	SCV1880-001	TEST POINT	
TP57	SCV1880-001	TEST POINT	
TP301	SCV1880-001	TEST POINT	
TP302	SCV1880-001	TEST POINT	

Symbol No.	Part No.	Part Name	Description
TP303	SCV1880-001	TEST POINT	
TP304	SCV1880-001	TEST POINT	
TP305	SCV1880-001	TEST POINT	
TP306	SCV1880-001	TEST POINT	
TP307	SCV1880-001	TEST POINT	
TP308	SCV1880-001	TEST POINT	
TP309	SCV1880-001	TEST POINT	
TP310	SCV1880-001	TEST POINT	
TP311	SCV1880-001	TEST POINT	
TP312	SCV1880-001	TEST POINT	
TP313	SCV1880-001	TEST POINT	
TP314	SCV1880-001	TEST POINT	
TP351	SCV1880-001	TEST POINT	
TP352	SCV1880-001	TEST POINT	
TP353	SCV1880-001	TEST POINT	
TP354	SCV1880-001	TEST POINT	
TP355	SCV1880-001	TEST POINT	
TP356	SCV1880-001	TEST POINT	
TP357	SCV1880-001	TEST POINT	
TP602	SCV1880-001	TEST POINT	
TP603	SCV1880-001	TEST POINT	
TP604	SCV1880-001	TEST POINT	
TP681	SCV1880-001	TEST POINT	
TP682	SCV1880-001	TEST POINT	
FL1	PGZ02196	LPF	
FL301	PGZ02181	LPF	
FL302	PGZ02181	LPF	
FL303	PELN0320	LPF	
K1	PGZ00627	FERRATE BEADS	
K2	PGZ00627	FERRATE BEADS	
K601	PGZ00627	FERRATE BEADS	
K602	PGZ00627	FERRATE BEADS	
K603	PGZ00627	FERRATE BEADS	
TB1	PGZ02228	EARTH LUG	
TB2	PGZ02228	EARTH LUG	
TB3	PGZ02228	EARTH LUG	
TB4	PGZ02228	EARTH LUG	
SL1	PRD20530	SHIELD CASE	
SC1	DPSP2606Z	SCREW	M2.6×6
SP1	PGZ00582	SPACER	

6.8 OUT/GEN BOARD ASSEMBLY LIST [1][7]

SLK1027-A3A [1][7]□□□□□□□

Symbol No.	Part No.	Part Name	Description
IC1	MC14577CF	I.C.(M)	MOTOROLA
IC2	UPC311G2	I.C.(M)	NEC
IC3	TC7W02F	I.C.(M)	TOSHIBA
IC4	UPC78L05T	I.C.(M)	NEC
IC5	NJM79L05UA	I.C.(M)	JRC
IC6	EL4583CS	I.C.(M)	ELANTEC
IC7	TC7W04F	I.C.(M)	TOSHIBA
IC8	UPC78L05T	I.C.(M)	NEC
IC9	TC74VHC123AF	I.C.(M)	TOSHIBA
IC10	UPC4082G2	I.C.(M)	NEC
IC11	TC74VHC123AF	I.C.(M)	TOSHIBA
IC12	UPC78L12T	I.C.(M)	NEC
IC13	UPC78L05T	I.C.(M)	NEC
IC14	NJM79L05UA	I.C.(M)	JRC
IC15	UPC358G2	I.C.(M)	NEC
IC16	CXD1216M	I.C.(M)	SONY
IC17	TC4W53F	I.C.(M)	TOSHIBA
IC18	CXD1217M	I.C.(M)	SONY
IC19	TC74VHC163F	I.C.(M)	TOSHIBA
IC20	UPC78L05T	I.C.(M)	NEC
IC21	NJM79L05UA	I.C.(M)	JRC
IC22	TC74VHC153F	I.C.(M)	TOSHIBA
IC301	UPC4074G2	I.C.(M)	NEC
IC302	UPC78L12T	I.C.(M)	NEC
IC303	UPC78L05T	I.C.(M)	NEC
IC304	TC74VHC123AF	I.C.(M)	TOSHIBA
IC305	TC74VHC123AF	I.C.(M)	TOSHIBA
IC306	AN77L03M	I.C.(M)	MATSUSHITA
IC307	TC74VHC244F	I.C.(M)	TOSHIBA
IC308	TC4W53F	I.C.(M)	TOSHIBA
IC309	UPC2384GA	I.C.(M)	NEC
IC310	TC7W00F	I.C.(M)	TOSHIBA
IC311	CXA1211M	I.C.(M)	SONY
IC312	TC74HC4053AF	I.C.(M)	TOSHIBA
IC313	UPC78L05T	I.C.(M)	NEC
IC314	NJM79L05UA	I.C.(M)	JRC
IC315	JCL0024	I.C.(M)	JVC
IC316	DS90C031TM	I.C.(M)	NS
IC317	TC74ACT541F	I.C.(M)	TOSHIBA
IC318	TD74BC541F	I.C.(M)	TOSHIBA
IC319	TD74BC541F	I.C.(M)	TOSHIBA
IC320	TC74ACT541F	I.C.(M)	TOSHIBA
IC321	M51957BFP	I.C.(M)	MITSUBISHI
IC322	TC74VHC244F	I.C.(M)	TOSHIBA
IC323	74ACT574SJ	I.C.(M)	NS
IC601	TC4W53F	I.C.(M)	TOSHIBA
IC602	UPC4082G2	I.C.(M)	NEC
IC603	LM6361M	I.C.(M)	TEXAS
IC604	UPC78L12T	I.C.(M)	NEC
IC605	NJM79L05UA	I.C.(M)	JRC
IC606	TC4W53F	I.C.(M)	TOSHIBA
IC607	UPC4082G2	I.C.(M)	NEC
IC608	LM6361M	I.C.(M)	TEXAS
IC609	UPC78L05T	I.C.(M)	NEC
IC610	UPC78L12T	I.C.(M)	NEC
IC611	NJM79L05UA	I.C.(M)	JRC
IC612	TC4W53F	I.C.(M)	TOSHIBA
IC613	UPC4082G2	I.C.(M)	NEC
IC614	LM6361M	I.C.(M)	TEXAS
IC615	UPC78L12T	I.C.(M)	NEC

Symbol No.	Part No.	Part Name	Description
IC616	NJM79L05UA	I.C.(M)	JRC
IC617	TC4W53F	I.C.(M)	TOSHIBA
IC618	UPC4082G2	I.C.(M)	NEC
IC619	LM6361M	I.C.(M)	TEXAS
IC620	UPC78L05T	I.C.(M)	NEC
IC621	UPC78L12T	I.C.(M)	NEC
IC622	NJM79L05UA	I.C.(M)	JRC
IC623	MM1111XF	I.C.(M)	MITUMI
IC624	UPC78L12T	I.C.(M)	NEC
IC625	TC4W53F	I.C.(M)	TOSHIBA
IC626	UPC4082G2	I.C.(M)	NEC
IC627	LM6361M	I.C.(M)	TEXAS
IC628	UPC78L05T	I.C.(M)	NEC
IC629	UPC78L12T	I.C.(M)	NEC
IC630	NJM79L05UA	I.C.(M)	JRC
IC631	LM6361M	I.C.(M)	TEXAS
IC632	UPC78L12T	I.C.(M)	NEC
IC633	NJM79L05UA	I.C.(M)	JRC
IC634	TC4W53F	I.C.(M)	TOSHIBA
IC635	NJM79L05UA	I.C.(M)	JRC
Q1	2SC4081(QR)	TRANSISTOR	ROHM
Q2	2SA1576(QRS)	TRANSISTOR	ROHM
Q3	2SA1576(QRS)	TRANSISTOR	ROHM
Q4	2SC4081(QR)	TRANSISTOR	ROHM
Q5	2SK665	F.E.T.	MATSUSHITA
Q6	2SA1576(QRS)	TRANSISTOR	ROHM
Q7	2SC4081(QR)	TRANSISTOR	ROHM
Q8	2SC4081(QR)	TRANSISTOR	ROHM
Q9	DTC124EU	TRANSISTOR	ROHM
Q10	2SC4081(QR)	TRANSISTOR	ROHM
Q11	2SC4081(QR)	TRANSISTOR	ROHM
Q13	2SA1576(QRS)	TRANSISTOR	ROHM
Q14	2SK656	F.E.T.	MATSUSHITA
Q302	2SC4081(QR)	TRANSISTOR	ROHM
Q303	2SC4081(QR)	TRANSISTOR	ROHM
Q304	2SC4081(QR)	TRANSISTOR	ROHM
Q306	2SA1576(QRS)	TRANSISTOR	ROHM
Q307	2SA1576(QRS)	TRANSISTOR	ROHM
Q308	2SA1576(QRS)	TRANSISTOR	ROHM
Q601	2SC4081(QR)	TRANSISTOR	ROHM
Q602	2SC4081(QR)	TRANSISTOR	ROHM
Q603	2SC4081(QR)	TRANSISTOR	ROHM
Q604	2SA1576(QRS)	TRANSISTOR	ROHM
Q605	2SC4081(QR)	TRANSISTOR	ROHM
Q606	2SC4081(QR)	TRANSISTOR	ROHM
Q607	2SC4081(QR)	TRANSISTOR	ROHM
Q608	2SC4081(QR)	TRANSISTOR	ROHM
Q609	2SA1576(QRS)	TRANSISTOR	ROHM
Q610	2SC4081(QR)	TRANSISTOR	ROHM
Q611	2SC4081(QR)	TRANSISTOR	ROHM
Q612	2SC4081(QR)	TRANSISTOR	ROHM
Q613	2SC4081(QR)	TRANSISTOR	ROHM
Q614	2SA1576(QRS)	TRANSISTOR	ROHM
Q615	2SC4081(QR)	TRANSISTOR	ROHM
Q616	2SC4081(QR)	TRANSISTOR	ROHM
Q617	2SC4081(QR)	TRANSISTOR	ROHM
Q618	2SC4081(QR)	TRANSISTOR	ROHM
Q619	2SA1576(QRS)	TRANSISTOR	ROHM
Q620	2SC4081(QR)	TRANSISTOR	ROHM

Symbol No.	Part No.	Part Name	Description
Q621	2SC4081(QR)	TRANSISTOR	ROHM
Q622	2SC4081(QR)	TRANSISTOR	ROHM
Q623	2SC4081(QR)	TRANSISTOR	ROHM
Q624	2SC4081(QR)	TRANSISTOR	ROHM
Q625	2SC4081(QR)	TRANSISTOR	ROHM
Q626	2SC4081(QR)	TRANSISTOR	ROHM
Q627	2SC4081(QR)	TRANSISTOR	ROHM
Q628	2SC4081(QR)	TRANSISTOR	ROHM
Q629	2SC4081(QR)	TRANSISTOR	ROHM
Q630	2SC4081(QR)	TRANSISTOR	ROHM
Q631	2SC4081(QR)	TRANSISTOR	ROHM
Q632	2SC4081(QR)	TRANSISTOR	ROHM
Q633	2SA1576(QRS)	TRANSISTOR	ROHM
Q634	2SC4081(QR)	TRANSISTOR	ROHM
Q635	2SA1576(QRS)	TRANSISTOR	ROHM
Q636	2SC4081(QR)	TRANSISTOR	ROHM
Q637	2SC4081(QR)	TRANSISTOR	ROHM
Q638	2SC4081(QR)	TRANSISTOR	ROHM
Q639	2SC4081(QR)	TRANSISTOR	ROHM
Q640	2SC4081(QR)	TRANSISTOR	ROHM
Q641	2SA1576(QRS)	TRANSISTOR	ROHM
Q642	2SC4081(QR)	TRANSISTOR	ROHM
Q643	DTC124EU	TRANSISTOR	ROHM
Q644	2SC4081(QR)	TRANSISTOR	ROHM
Q645	2SA1576(QRS)	TRANSISTOR	ROHM
Q646	2SC4081(QR)	TRANSISTOR	ROHM
Q647	2SA1576(QRS)	TRANSISTOR	ROHM
Q648	2SC4081(QR)	TRANSISTOR	ROHM
Q649	2SC4081(QR)	TRANSISTOR	ROHM
Q650	2SC4081(QR)	TRANSISTOR	ROHM
Q651	2SC4081(QR)	TRANSISTOR	ROHM
Q652	2SC4081(QR)	TRANSISTOR	ROHM
Q653	2SC4081(QR)	TRANSISTOR	ROHM
Q654	2SC4081(QR)	TRANSISTOR	ROHM
D1	DA204U	DIODE	ROHM
D3	DAN202U	DIODE	ROHM
D302	IMN10	D.ARRAY	ROHM
D303	IMN10	D.ARRAY	ROHM
D305	DAP202U	DIODE	ROHM
D601	DAP202U	DIODE	ROHM
D602	DAP202U	DIODE	ROHM
R1	NRSA63J-333	M.G.RESISTOR	33K 1/16W
R2	NRSA63J-473	M.G.RESISTOR	47K 1/16W
R3	NRSA63J-272	M.G.RESISTOR	2.7K 1/16W
R4	NRSA63J-272	M.G.RESISTOR	2.7K 1/16W
R5	NRSA63J-222	M.G.RESISTOR	2.2K 1/16W
R6	NRSA63J-181	M.G.RESISTOR	180 1/16W
R7	NRSA63J-272	M.G.RESISTOR	2.7K 1/16W
R8	NRSA63J-561	M.G.RESISTOR	560 1/16W
R9	NRSA63J-561	M.G.RESISTOR	560 1/16W
R10	NRSA63J-101	M.G.RESISTOR	100 1/16W
R11	NRSA63J-272	M.G.RESISTOR	2.7K 1/16W
R12	NRSA63J-151	M.G.RESISTOR	150 1/16W
R13	NRSA63J-272	M.G.RESISTOR	2.7K 1/16W
R14	NRSA63J-151	M.G.RESISTOR	150 1/16W
R15	NRSA63J-152	M.G.RESISTOR	1.5K 1/16W
R16	NRSA63J-471	M.G.RESISTOR	470 1/16W

Symbol No.	Part No.	Part Name	Description
R17	NRSA63J-471	M.G.RESISTOR	470 1/16W
R18	NRSA63J-102	M.G.RESISTOR	1.0K 1/16W
R19	NRSA63J-561	M.G.RESISTOR	560 1/16W
R20	NRSA63J-333	M.G.RESISTOR	33K 1/16W
R21	NRSA63J-223	M.G.RESISTOR	22K 1/16W
R22	NRSA63J-152	M.G.RESISTOR	1.5K 1/16W
R23	NRSA63J-821	M.G.RESISTOR	820 1/16W
R24	NRVA63D-390	M.F.RESISTOR	39 1/16W
R25	NRSA63J-331	M.G.RESISTOR	330 1/16W
R26	NRSA63J-332	M.G.RESISTOR	3.3K 1/16W
R27	NRSA63J-182	M.G.RESISTOR	1.8K 1/16W
R28	NRSA63J-182	M.G.RESISTOR	1.8K 1/16W
R29	NRSA63J-181	M.G.RESISTOR	180 1/16W
R30	NRSA63J-394	M.G.RESISTOR	390K 1/16W
R31	NRSA63J-273	M.G.RESISTOR	27K 1/16W
R32	NRSA63J-102	M.G.RESISTOR	1.0K 1/16W
R33	NRSA63J-101	M.G.RESISTOR	100 1/16W
R34	NRSA63J-101	M.G.RESISTOR	100 1/16W
R35	NRSA63J-101	M.G.RESISTOR	100 1/16W
R36	NRSA63J-272	M.G.RESISTOR	2.7K 1/16W
R37	NRSA63J-102	M.G.RESISTOR	1.0K 1/16W
R38	NRSA63J-102	M.G.RESISTOR	1.0K 1/16W
R39	NRSA63J-272	M.G.RESISTOR	2.7K 1/16W
R40	NRSA63J-223	M.G.RESISTOR	22K 1/16W
R41	NRSA63J-563	M.G.RESISTOR	56K 1/16W
R42	QRD161J-152	C.RESISTOR	1.5K 1/6W
R43	NRSA63J-101	M.G.RESISTOR	100 1/16W
R44	NRSA63J-684	M.G.RESISTOR	680K 1/16W
R45	NRSA63J-472	M.G.RESISTOR	4.7K 1/16W
R46	NRSA63J-101	M.G.RESISTOR	100 1/16W
R47	NRSA63J-101	M.G.RESISTOR	100 1/16W
R48	NRSA63J-103	M.G.RESISTOR	10K 1/16W
R49	NRSA63J-472	M.G.RESISTOR	4.7K 1/16W
R50	NRSA63J-101	M.G.RESISTOR	100 1/16W
R51	NRSA63J-0R0	M.G.RESISTOR	0 1/16W
R52	NRSA63J-273	M.G.RESISTOR	27K 1/16W
R53	NRSA63J-101	M.G.RESISTOR	100 1/16W
R54	NRSA63J-223	M.G.RESISTOR	22K 1/16W
R56	NRSA63J-332	M.G.RESISTOR	3.3K 1/16W
R57	NRSA63J-103	M.G.RESISTOR	10K 1/16W
R58	NRSA63J-103	M.G.RESISTOR	10K 1/16W
R59	NRSA63J-101	M.G.RESISTOR	100 1/16W
R60	NRSA63J-821	M.G.RESISTOR	820 1/16W
R61	NRSA63J-222	M.G.RESISTOR	2.2K 1/16W
R62	NRSA63J-333	M.G.RESISTOR	33K 1/16W
R63	NRSA63J-682	M.G.RESISTOR	6.8K 1/16W
R64	NRSA63J-222	M.G.RESISTOR	2.2K 1/16W
R65	NRSA63J-102	M.G.RESISTOR	1.0K 1/16W
R66	NRSA63J-103	M.G.RESISTOR	10K 1/16W
R67	NRVA63D-333	M.F.RESISTOR	33K 1/16W
R68	NRSA63J-102	M.G.RESISTOR	1.0K 1/16W
R69	NRSA63J-0R0	M.G.RESISTOR	0 1/16W
R70	NRSA63J-472	M.G.RESISTOR	4.7K 1/16W
R72	NRVA63D-102	M.F.RESISTOR	1.0K 1/16W
R73	NRVA63D-333	M.F.RESISTOR	33K 1/16W
R74	NRSA63J-101	M.G.RESISTOR	100 1/16W
R75	NRSA63J-0R0	M.G.RESISTOR	0 1/16W
R77	NRSA63J-0R0	M.G.RESISTOR	0 1/16W
R81	NRSA63J-472	M.G.RESISTOR	4.7K 1/16W

[OUT/GEN]

Symbol No.	Part No.	Part Name	Description	
R82	NRSA63J-393	M.G.RESISTOR	39K	1/16W
R84	NRSA63J-105	M.G.RESISTOR	1.0M	1/16W
R85	NRSA63J-101	M.G.RESISTOR	100	1/16W
R86	NRSA63J-105	M.G.RESISTOR	1.0M	1/16W
R87	NRSA63J-101	M.G.RESISTOR	100	1/16W
R89	NRSA63J-333	M.G.RESISTOR	33K	1/16W
R90	NRSA63J-101	M.G.RESISTOR	100	1/16W
R91	NRSA63J-101	M.G.RESISTOR	100	1/16W
R92	NRSA63J-101	M.G.RESISTOR	100	1/16W
R93	NRSA63J-101	M.G.RESISTOR	100	1/16W
R95	NRSA63J-101	M.G.RESISTOR	100	1/16W
R96	NRSA63J-101	M.G.RESISTOR	100	1/16W
R97	NRSA63J-101	M.G.RESISTOR	100	1/16W
R98	NRSA63J-101	M.G.RESISTOR	100	1/16W
R99	NRSA63J-101	M.G.RESISTOR	100	1/16W
R100	NRSA63J-101	M.G.RESISTOR	100	1/16W
R101	NRSA63J-101	M.G.RESISTOR	100	1/16W
R102	NRSA63J-101	M.G.RESISTOR	100	1/16W
R104	NRSA63J-101	M.G.RESISTOR	100	1/16W
R105	NRSA63J-103	M.G.RESISTOR	10K	1/16W
R106	NRSA63J-0R0	M.G.RESISTOR	0	1/16W
R107	QRD161J-0R0	C.RESISTOR	0	1/6W
R109	QRD161J-102	C.RESISTOR	1.0K	1/6W
R301	NRSA63J-102	M.G.RESISTOR	1.0K	1/16W
R302	NRSA63J-333	M.G.RESISTOR	33K	1/16W
R303	NRSA63J-822	M.G.RESISTOR	8.2K	1/16W
R304	NRSA63J-273	M.G.RESISTOR	27K	1/16W
R305	NRSA63J-153	M.G.RESISTOR	15K	1/16W
R306	NRSA63J-102	M.G.RESISTOR	1.0K	1/16W
R307	NRSA63J-562	M.G.RESISTOR	5.6K	1/16W
R308	QRV141F-1501	M.F.RESISTOR	1.50K	1/4W
R309	NRSA63J-332	M.G.RESISTOR	3.3K	1/16W
R310	NRSA63J-223	M.G.RESISTOR	22K	1/16W
R311	NRSA63J-151	M.G.RESISTOR	150	1/16W
R312	NRVA63D-682	M.F.RESISTOR	6.8K	1/16W
R313	NRVA63D-473	M.F.RESISTOR	47K	1/16W
R314	NRSA63J-101	M.G.RESISTOR	100	1/16W
R315	NRVA63D-272	M.F.RESISTOR	2.7K	1/16W
R316	NRVA63D-332	M.F.RESISTOR	3.3K	1/16W
R317	NRSA63J-101	M.G.RESISTOR	100	1/16W
R318	NRSA63J-561	M.G.RESISTOR	560	1/16W
R319	NRSA63J-222	M.G.RESISTOR	2.2K	1/16W
R320	NRSA63J-101	M.G.RESISTOR	100	1/16W
R321	NRSA63J-101	M.G.RESISTOR	100	1/16W
R322	NRSA63J-472	M.G.RESISTOR	4.7K	1/16W
R324	NRSA63J-101	M.G.RESISTOR	100	1/16W
R325	NRSA63J-102	M.G.RESISTOR	1.0K	1/16W
R326	NRSA63J-101	M.G.RESISTOR	100	1/16W
R327	NRSA63J-221	M.G.RESISTOR	220	1/16W
R328	NRSA63J-103	M.G.RESISTOR	10K	1/16W
R329	NRSA63J-103	M.G.RESISTOR	10K	1/16W
R330	NRSA63J-103	M.G.RESISTOR	10K	1/16W
R331	NRSA63J-101	M.G.RESISTOR	100	1/16W
R332	NRSA63J-101	M.G.RESISTOR	100	1/16W
R334	NRSA63J-0R0	M.G.RESISTOR	0	1/16W
R335	NRSA63J-103	M.G.RESISTOR	10K	1/16W
R337	NRSA63J-103	M.G.RESISTOR	10K	1/16W
R338	NRSA63J-103	M.G.RESISTOR	10K	1/16W
R339	NRSA63J-912	M.G.RESISTOR	9.1K	1/16W

Symbol No.	Part No.	Part Name	Description	
R340	NRSA63J-472	M.G.RESISTOR	4.7K	1/16W
R341	NRSA63J-122	M.G.RESISTOR	1.2K	1/16W
R342	NRSA63J-332	M.G.RESISTOR	3.3K	1/16W
R343	NRSA63J-332	M.G.RESISTOR	3.3K	1/16W
R344	NRSA63J-561	M.G.RESISTOR	560	1/16W
R345	NRSA63J-561	M.G.RESISTOR	560	1/16W
R346	NRSA63J-333	M.G.RESISTOR	33K	1/16W
R347	NRSA63J-152	M.G.RESISTOR	1.5K	1/16W
R348	NRSA63J-152	M.G.RESISTOR	1.5K	1/16W
R349	NRSA63J-333	M.G.RESISTOR	33K	1/16W
R350	NRSA63J-222	M.G.RESISTOR	2.2K	1/16W
R351	NRSA63J-821	M.G.RESISTOR	820	1/16W
R352	NRSA63J-821	M.G.RESISTOR	820	1/16W
R353	NRSA63J-101	M.G.RESISTOR	100	1/16W
R354	NRSA63J-101	M.G.RESISTOR	100	1/16W
R355	NRSA63J-222	M.G.RESISTOR	2.2K	1/16W
R356	NRSA63J-222	M.G.RESISTOR	2.2K	1/16W
R357	NRSA63J-101	M.G.RESISTOR	100	1/16W
R358	NRSA63J-821	M.G.RESISTOR	820	1/16W
R359	NRSA63J-102	M.G.RESISTOR	1.0K	1/16W
R360	NRSA63J-103	M.G.RESISTOR	10K	1/16W
R361	NRVA63D-560	M.F.RESISTOR	56	1/16W
R362	NRSA63F-115	M.G.RESISTOR	1.1M	1/16W
R363	NRSA63J-102	M.G.RESISTOR	1.0K	1/16W
R364	NRSA63J-102	M.G.RESISTOR	1.0K	1/16W
R365	NRSA63J-101	M.G.RESISTOR	100	1/16W
R366	NRSA63J-101	M.G.RESISTOR	100	1/16W
R367	NRSA63J-101	M.G.RESISTOR	100	1/16W
R368	NRSA63J-101	M.G.RESISTOR	100	1/16W
R371	NRSA63J-472	M.G.RESISTOR	4.7K	1/16W
R372	NRSA63J-472	M.G.RESISTOR	4.7K	1/16W
R374	NRSA63J-101	M.G.RESISTOR	100	1/16W
R375	NRSA63J-101	M.G.RESISTOR	100	1/16W
R376	NRSA63J-101	M.G.RESISTOR	100	1/16W
R377	NRSA63J-101	M.G.RESISTOR	100	1/16W
R378	NRSA63J-101	M.G.RESISTOR	100	1/16W
R379	NRSA63J-101	M.G.RESISTOR	100	1/16W
R380	NRSA63J-101	M.G.RESISTOR	100	1/16W
R381	NRSA63J-101	M.G.RESISTOR	100	1/16W
R382	NRSA63J-101	M.G.RESISTOR	100	1/16W
R383	NRSA63J-101	M.G.RESISTOR	100	1/16W
R384	NRSA63J-101	M.G.RESISTOR	100	1/16W
R385	NRSA63J-101	M.G.RESISTOR	100	1/16W
R386	NRSA63J-101	M.G.RESISTOR	100	1/16W
R387	NRSA63J-101	M.G.RESISTOR	100	1/16W
R388	NRSA63J-101	M.G.RESISTOR	100	1/16W
R389	NRSA63J-101	M.G.RESISTOR	100	1/16W
R390	NRSA63J-101	M.G.RESISTOR	100	1/16W
R391	NRSA63J-101	M.G.RESISTOR	100	1/16W
R392	NRSA63J-101	M.G.RESISTOR	100	1/16W
R393	NRSA63J-101	M.G.RESISTOR	100	1/16W
R394	NRSA63J-103	M.G.RESISTOR	10K	1/16W
R395	NRSA63J-103	M.G.RESISTOR	10K	1/16W
R396	NRSA63J-103	M.G.RESISTOR	10K	1/16W
R397	NRSA63J-103	M.G.RESISTOR	10K	1/16W
R398	NRSA63J-103	M.G.RESISTOR	10K	1/16W
R399	NRSA63J-103	M.G.RESISTOR	10K	1/16W
R400	NRSA63J-103	M.G.RESISTOR	10K	1/16W
R401	NRSA63J-103	M.G.RESISTOR	10K	1/16W

Symbol No.	Part No.	Part Name	Description	
R402	NRSA63J-101	M.G.RESISTOR	100	1/16W
R403	NRSA63J-101	M.G.RESISTOR	100	1/16W
R404	NRSA63J-101	M.G.RESISTOR	100	1/16W
R405	NRSA63J-101	M.G.RESISTOR	100	1/16W
R406	NRSA63J-122	M.G.RESISTOR	1.2K	1/16W
R407	NRSA63J-101	M.G.RESISTOR	100	1/16W
R408	NRSA63J-103	M.G.RESISTOR	10K	1/16W
R411	NRSA63J-103	M.G.RESISTOR	10K	1/16W
R412	NRSA63J-103	M.G.RESISTOR	10K	1/16W
R413	NRSA63J-103	M.G.RESISTOR	10K	1/16W
R414	NRSA63J-103	M.G.RESISTOR	10K	1/16W
R415	NRSA63J-101	M.G.RESISTOR	100	1/16W
R416	NRSA63J-101	M.G.RESISTOR	100	1/16W
R417	NRSA63J-332	M.G.RESISTOR	3.3K	1/16W
R419	NRSA63J-0R0	M.G.RESISTOR	0	1/16W
R420	NRSA63J-122	M.G.RESISTOR	1.2K	1/16W
R426	NRSA63J-101	M.G.RESISTOR	100	1/16W
R429	NRSA63J-101	M.G.RESISTOR	100	1/16W
R430	NRSA63J-101	M.G.RESISTOR	100	1/16W
R431	NRSA63J-331	M.G.RESISTOR	330	1/16W
R432	NRSA63J-152	M.G.RESISTOR	1.5K	1/16W
R434	NRSA63J-101	M.G.RESISTOR	100	1/16W
R437	NRSA63J-101	M.G.RESISTOR	100	1/16W
R439	NRSA63J-391	M.G.RESISTOR	390	1/16W
R440	NRSA63J-0R0	M.G.RESISTOR	0	1/16W
R601	NRSA63J-333	M.G.RESISTOR	33K	1/16W
R602	NRSA63J-183	M.G.RESISTOR	18K	1/16W
R603	NRSA63J-392	M.G.RESISTOR	3.9K	1/16W
R604	NRSA63J-223	M.G.RESISTOR	22K	1/16W
R605	NRSA63J-223	M.G.RESISTOR	22K	1/16W
R606	NRSA63J-472	M.G.RESISTOR	4.7K	1/16W
R608	NRSA63J-152	M.G.RESISTOR	1.5K	1/16W
R609	NRSA63J-561	M.G.RESISTOR	560	1/16W
R610	NRSA63J-101	M.G.RESISTOR	100	1/16W
R611	NRSA63J-102	M.G.RESISTOR	1.0K	1/16W
R612	NRSA63J-222	M.G.RESISTOR	2.2K	1/16W
R613	NRSA63J-102	M.G.RESISTOR	1.0K	1/16W
R614	NRSA63J-471	M.G.RESISTOR	470	1/16W
R615	NRSA63J-102	M.G.RESISTOR	1.0K	1/16W
R616	NRSA63J-101	M.G.RESISTOR	100	1/16W
R617	NRSA63J-182	M.G.RESISTOR	1.8K	1/16W
R618	NRSA63J-151	M.G.RESISTOR	150	1/16W
R619	NRSA63J-151	M.G.RESISTOR	150	1/16W
R620	NRSA63J-102	M.G.RESISTOR	1.0K	1/16W
R621	NRSA63J-182	M.G.RESISTOR	1.8K	1/16W
R622	NRSA63J-182	M.G.RESISTOR	1.8K	1/16W
R623	NRSA63J-222	M.G.RESISTOR	2.2K	1/16W
R624	NRSA63J-151	M.G.RESISTOR	150	1/16W
R625	NRSA63J-151	M.G.RESISTOR	150	1/16W
R626	NRSA63J-333	M.G.RESISTOR	33K	1/16W
R627	NRSA63J-183	M.G.RESISTOR	18K	1/16W
R628	NRSA63J-392	M.G.RESISTOR	3.9K	1/16W
R629	NRSA63J-223	M.G.RESISTOR	22K	1/16W
R630	NRSA63J-223	M.G.RESISTOR	22K	1/16W
R631	NRSA63J-472	M.G.RESISTOR	4.7K	1/16W
R633	NRSA63J-152	M.G.RESISTOR	1.5K	1/16W
R634	NRSA63J-561	M.G.RESISTOR	560	1/16W
R635	NRSA63J-101	M.G.RESISTOR	100	1/16W
R636	NRSA63J-102	M.G.RESISTOR	1.0K	1/16W

Symbol No.	Part No.	Part Name	Description	
R637	NRSA63J-222	M.G.RESISTOR	2.2K	1/16W
R638	NRSA63J-102	M.G.RESISTOR	1.0K	1/16W
R639	NRSA63J-471	M.G.RESISTOR	470	1/16W
R640	NRSA63J-102	M.G.RESISTOR	1.0K	1/16W
R641	NRSA63J-101	M.G.RESISTOR	100	1/16W
R642	NRSA63J-182	M.G.RESISTOR	1.8K	1/16W
R643	NRSA63J-151	M.G.RESISTOR	150	1/16W
R644	NRSA63J-151	M.G.RESISTOR	150	1/16W
R645	NRSA63J-102	M.G.RESISTOR	1.0K	1/16W
R646	NRSA63J-182	M.G.RESISTOR	1.8K	1/16W
R647	NRSA63J-182	M.G.RESISTOR	1.8K	1/16W
R648	NRSA63J-222	M.G.RESISTOR	2.2K	1/16W
R649	NRSA63J-151	M.G.RESISTOR	150	1/16W
R650	NRSA63J-151	M.G.RESISTOR	150	1/16W
R651	NRSA63J-333	M.G.RESISTOR	33K	1/16W
R652	NRSA63J-183	M.G.RESISTOR	18K	1/16W
R653	NRSA63J-392	M.G.RESISTOR	3.9K	1/16W
R654	NRSA63J-223	M.G.RESISTOR	22K	1/16W
R655	NRSA63J-223	M.G.RESISTOR	22K	1/16W
R656	NRSA63J-472	M.G.RESISTOR	4.7K	1/16W
R658	NRSA63J-152	M.G.RESISTOR	1.5K	1/16W
R659	NRSA63J-561	M.G.RESISTOR	560	1/16W
R660	NRSA63J-101	M.G.RESISTOR	100	1/16W
R661	NRSA63J-102	M.G.RESISTOR	1.0K	1/16W
R662	NRSA63J-222	M.G.RESISTOR	2.2K	1/16W
R663	NRSA63J-102	M.G.RESISTOR	1.0K	1/16W
R665	NRSA63J-152	M.G.RESISTOR	1.5K	1/16W
R666	NRSA63J-101	M.G.RESISTOR	100	1/16W
R667	NRSA63J-182	M.G.RESISTOR	1.8K	1/16W
R668	NRVA63D-151	M.F.RESISTOR	150	1/16W
R669	NRSA63J-151	M.G.RESISTOR	150	1/16W
R670	NRSA63J-151	M.G.RESISTOR	150	1/16W
R671	NRSA63J-102	M.G.RESISTOR	1.0K	1/16W
R672	NRSA63J-182	M.G.RESISTOR	1.8K	1/16W
R673	NRSA63J-182	M.G.RESISTOR	1.8K	1/16W
R674	NRSA63J-222	M.G.RESISTOR	2.2K	1/16W
R675	NRSA63J-151	M.G.RESISTOR	150	1/16W
R676	NRSA63J-151	M.G.RESISTOR	150	1/16W
R677	NRSA63J-333	M.G.RESISTOR	33K	1/16W
R678	NRSA63J-183	M.G.RESISTOR	18K	1/16W
R679	NRSA63J-392	M.G.RESISTOR	3.9K	1/16W
R680	NRSA63J-223	M.G.RESISTOR	22K	1/16W
R681	NRSA63J-223	M.G.RESISTOR	22K	1/16W
R682	NRSA63J-472	M.G.RESISTOR	4.7K	1/16W
R684	NRSA63J-152	M.G.RESISTOR	1.5K	1/16W
R685	NRSA63J-561	M.G.RESISTOR	560	1/16W
R686	NRSA63J-101	M.G.RESISTOR	100	1/16W
R687	NRSA63J-102	M.G.RESISTOR	1.0K	1/16W
R688	NRSA63J-222	M.G.RESISTOR	2.2K	1/16W
R689	NRSA63J-102	M.G.RESISTOR	1.0K	1/16W
R691	NRSA63J-152	M.G.RESISTOR	1.5K	1/16W
R692	NRSA63J-101	M.G.RESISTOR	100	1/16W
R693	NRSA63J-182	M.G.RESISTOR	1.8K	1/16W
R694	NRVA63D-151	M.F.RESISTOR	150	1/16W
R695	NRSA63J-151	M.G.RESISTOR	150	1/16W
R696	NRSA63J-151	M.G.RESISTOR	150	1/16W
R697	NRSA63J-102	M.G.RESISTOR	1.0K	1/16W
R698	NRSA63J-182	M.G.RESISTOR	1.8K	1/16W
R699	NRSA63J-182	M.G.RESISTOR	1.8K	1/16W

OUT/GEN]

Symbol No.	Part No.	Part Name	Description	
R700	NRSA63J-222	M.G.RESISTOR	2.2K	1/16W
R701	NRSA63J-151	M.G.RESISTOR	150	1/16W
R702	NRSA63J-151	M.G.RESISTOR	150	1/16W
R703	NRSA63J-223	M.G.RESISTOR	22K	1/16W
R704	NRSA63J-103	M.G.RESISTOR	10K	1/16W
R705	NRSA63J-223	M.G.RESISTOR	22K	1/16W
R706	NRSA63J-103	M.G.RESISTOR	10K	1/16W
R707	NRSA63J-101	M.G.RESISTOR	100	1/16W
R709	NRSA63J-101	M.G.RESISTOR	100	1/16W
R710	NRSA63J-101	M.G.RESISTOR	100	1/16W
R711	NRSA63J-102	M.G.RESISTOR	1.0K	1/16W
R712	NRSA63J-102	M.G.RESISTOR	1.0K	1/16W
R713	NRSA63J-102	M.G.RESISTOR	1.0K	1/16W
R714	NRSA63J-102	M.G.RESISTOR	1.0K	1/16W
R715	NRSA63J-102	M.G.RESISTOR	1.0K	1/16W
R716	NRSA63F-46R	M.G.RESISTOR		
R717	NRSA63F-232	M.G.RESISTOR	2.3K	1/16W
R718	NRSA63J-393	M.G.RESISTOR	39K	1/16W
R719	NRSA63J-392	M.G.RESISTOR	3.9K	1/16W
R720	NRSA63J-122	M.G.RESISTOR	1.2K	1/16W
R721	NRSA63J-122	M.G.RESISTOR	1.2K	1/16W
R722	NRSA63J-392	M.G.RESISTOR	3.9K	1/16W
R723	NRSA63J-101	M.G.RESISTOR	100	1/16W
R724	NRSA63J-272	M.G.RESISTOR	2.7K	1/16W
R725	NRSA63J-223	M.G.RESISTOR	22K	1/16W
R726	NRSA63J-123	M.G.RESISTOR	12K	1/16W
R727	NRSA63J-272	M.G.RESISTOR	2.7K	1/16W
R728	NRSA63J-223	M.G.RESISTOR	22K	1/16W
R729	NRSA63J-223	M.G.RESISTOR	22K	1/16W
R730	NRSA63J-472	M.G.RESISTOR	4.7K	1/16W
R732	NRSA63J-152	M.G.RESISTOR	1.5K	1/16W
R733	NRSA63J-561	M.G.RESISTOR	560	1/16W
R734	NRSA63J-101	M.G.RESISTOR	100	1/16W
R735	NRSA63J-102	M.G.RESISTOR	1.0K	1/16W
R736	NRSA63J-222	M.G.RESISTOR	2.2K	1/16W
R738	NRSA63J-102	M.G.RESISTOR	1.0K	1/16W
R739	NRSA63J-152	M.G.RESISTOR	1.5K	1/16W
R740	NRSA63J-101	M.G.RESISTOR	100	1/16W
R741	NRSA63J-272	M.G.RESISTOR	2.7K	1/16W
R742	NRVA63D-151	M.F.RESISTOR	150	1/16W
R743	NRSA63J-151	M.G.RESISTOR	150	1/16W
R744	NRSA63J-151	M.G.RESISTOR	150	1/16W
R745	NRSA63J-182	M.G.RESISTOR	1.8K	1/16W
R746	NRSA63J-182	M.G.RESISTOR	1.8K	1/16W
R747	NRSA63J-102	M.G.RESISTOR	1.0K	1/16W
R748	NRSA63J-222	M.G.RESISTOR	2.2K	1/16W
R749	NRSA63J-151	M.G.RESISTOR	150	1/16W
R750	NRSA63J-151	M.G.RESISTOR	150	1/16W
R751	NRSA63J-151	M.G.RESISTOR	150	1/16W
R752	NRSA63J-151	M.G.RESISTOR	150	1/16W
R753	NRSA63J-182	M.G.RESISTOR	1.8K	1/16W
R754	NRSA63J-182	M.G.RESISTOR	1.8K	1/16W
R755	NRSA63J-102	M.G.RESISTOR	1.0K	1/16W
R756	NRSA63J-222	M.G.RESISTOR	2.2K	1/16W
R757	NRSA63J-151	M.G.RESISTOR	150	1/16W
R758	NRSA63J-151	M.G.RESISTOR	150	1/16W
R759	NRSA63J-122	M.G.RESISTOR	1.2K	1/16W
R760	NRSA63J-393	M.G.RESISTOR	39K	1/16W
R761	NRSA63J-392	M.G.RESISTOR	3.9K	1/16W
R762	NRSA63J-102	M.G.RESISTOR	1.0K	1/16W

Symbol No.	Part No.	Part Name	Description	
R763	NRSA63J-152	M.G.RESISTOR	1.5K	1/16W
R764	NRSA63J-152	M.G.RESISTOR	1.5K	1/16W
R765	NRSA63J-392	M.G.RESISTOR	3.9K	1/16W
R766	NRSA63J-101	M.G.RESISTOR	100	1/16W
R767	NRSA63J-392	M.G.RESISTOR	3.9K	1/16W
R768	NRSA63J-223	M.G.RESISTOR	22K	1/16W
R769	NRSA63J-471	M.G.RESISTOR	470	1/16W
R770	NRSA63J-101	M.G.RESISTOR	100	1/16W
R771	NRSA63J-561	M.G.RESISTOR	560	1/16W
R772	NRSA63J-272	M.G.RESISTOR	2.7K	1/16W
R773	NRSA63J-151	M.G.RESISTOR	150	1/16W
R774	NRSA63J-151	M.G.RESISTOR	150	1/16W
R775	NRSA63J-151	M.G.RESISTOR	150	1/16W
R776	NRSA63J-182	M.G.RESISTOR	1.8K	1/16W
R777	NRSA63J-182	M.G.RESISTOR	1.8K	1/16W
R778	NRSA63J-123	M.G.RESISTOR	12K	1/16W
R779	NRSA63J-183	M.G.RESISTOR	18K	1/16W
R780	NRSA63J-122	M.G.RESISTOR	1.2K	1/16W
R781	NRSA63J-103	M.G.RESISTOR	10K	1/16W
R782	NRSA63J-222	M.G.RESISTOR	2.2K	1/16W
R783	NRSA63J-151	M.G.RESISTOR	150	1/16W
R784	NRSA63J-151	M.G.RESISTOR	150	1/16W
R785	NRSA63J-122	M.G.RESISTOR	1.2K	1/16W
R786	NRSA63J-392	M.G.RESISTOR	3.9K	1/16W
R787	NRSA63J-182	M.G.RESISTOR	1.8K	1/16W
R788	NRSA63J-272	M.G.RESISTOR	2.7K	1/16W
R789	NRSA63J-272	M.G.RESISTOR	2.7K	1/16W
R790	NRSA63J-103	M.G.RESISTOR	10K	1/16W
R791	NRSA63J-151	M.G.RESISTOR	150	1/16W
R792	NRSA63J-151	M.G.RESISTOR	150	1/16W
R793	NRSA63J-182	M.G.RESISTOR	1.8K	1/16W
R794	NRSA63J-182	M.G.RESISTOR	1.8K	1/16W
R795	NRSA63J-222	M.G.RESISTOR	2.2K	1/16W
R796	NRSA63J-151	M.G.RESISTOR	150	1/16W
R797	NRSA63J-151	M.G.RESISTOR	150	1/16W
R798	NRSA63J-0R0	M.G.RESISTOR	0	1/16W
R800	NRSA63J-0R0	M.G.RESISTOR	0	1/16W
R802	NRSA63J-0R0	M.G.RESISTOR	0	1/16W
R804	NRSA63J-0R0	M.G.RESISTOR	0	1/16W
R806	NRSA63J-0R0	M.G.RESISTOR	0	1/16W
R808	NRSA63J-0R0	M.G.RESISTOR	0	1/16W
R810	NRSA63J-101	M.G.RESISTOR	100	1/16W
R811	NRSA63J-222	M.G.RESISTOR	2.2K	1/16W
R812	NRSA63J-471	M.G.RESISTOR	470	1/16W
R813	NRVA63D-471	M.F.RESISTOR	470	1/16W
R814	NRSA63J-101	M.G.RESISTOR	100	1/16W
R815	NRSA63J-222	M.G.RESISTOR	2.2K	1/16W
R816	NRSA63J-471	M.G.RESISTOR	470	1/16W
R817	NRVA63D-471	M.F.RESISTOR	470	1/16W
R818	NRSA63J-101	M.G.RESISTOR	100	1/16W
R819	NRSA63J-222	M.G.RESISTOR	2.2K	1/16W
R820	NRSA63J-471	M.G.RESISTOR	470	1/16W
R821	NRVA63D-471	M.F.RESISTOR	470	1/16W
R823	NRSA63J-182	M.G.RESISTOR	1.8K	1/16W
R825	NRSA63J-182	M.G.RESISTOR	1.8K	1/16W
R827	NRSA63J-182	M.G.RESISTOR	1.8K	1/16W
R829	NRSA63J-182	M.G.RESISTOR	1.8K	1/16W
R831	NRSA63J-182	M.G.RESISTOR	1.8K	1/16W
R832	NRSA63J-182	M.G.RESISTOR	1.8K	1/16W

Symbol No.	Part No.	Part Name	Description	
R833	NRSA63J-182	M.G.RESISTOR	1.8K	1/16W
R834	NRSA63J-182	M.G.RESISTOR	1.8K	1/16W
R835	NRSA63J-OR0	M.G.RESISTOR	0	1/16W
R837	NRSA63J-OR0	M.G.RESISTOR	0	1/16W
R839	NRSA63J-OR0	M.G.RESISTOR	0	1/16W
R841	NRSA63J-OR0	M.G.RESISTOR	0	1/16W
R843	NRSA63J-OR0	M.G.RESISTOR	0	1/16W
R845	NRSA63J-OR0	M.G.RESISTOR	0	1/16W
VR1	NVP1416-501	TRIM.RESISTOR	BBH PHS	
VR2	NVP1416-202	TRIM.RESISTOR	SETUP LEV	
VR3	NVP1416-103	TRIM.RESISTOR	CERR DC	
VR301	NVP1416-501	TRIM.RESISTOR	INT H	
VR302	NVP1416-501	TRIM.RESISTOR	SY LEV	
VR605	NVP1416-501	TRIM.RESISTOR	CPSY LEV	
VR606	NVP1416-501	TRIM.RESISTOR	YC Y LEV	
VR607	NVP1416-501	TRIM.RESISTOR	CPNY LEV	
VR608	NVP1416-102	TRIM.RESISTOR	CPSC LEV	
RA301	NRB082J-101	RESISTOR ARRAY		
RA302	NRB082J-101	RESISTOR ARRAY		
RA303	NRB082J-101	RESISTOR ARRAY		
RA304	NRB082J-101	RESISTOR ARRAY		
C1	NEZ0001-107	E.CAPACITOR	100	
C2	NEH91CM-476	E.CAPACITOR	47	16V
C3	NCS31HJ-181	CER.CAPACITOR	180P	50V
C4	NCS31HJ-180	CER.CAPACITOR	18P	50V
C5	NCS31HJ-181	CER.CAPACITOR	180P	50V
C6	NCB31HK-103	CER.CAPACITOR	0.010	50V
C7	NCB31HK-103	CER.CAPACITOR	0.010	50V
C8	NCF31CZ-104	CER.CAPACITOR	0.10	16V
C9	NCF31CZ-104	CER.CAPACITOR	0.10	16V
C10	NCF31CZ-104	CER.CAPACITOR	0.10	16V
C11	NEF11CM-335	TAN.CAPACITOR	3.3	16V
C12	NCB31HK-103	CER.CAPACITOR	0.010	50V
C13	NCB31HK-103	CER.CAPACITOR	0.010	50V
C14	NCB31HK-103	CER.CAPACITOR	0.010	50V
C15	NEZ0001-107	E.CAPACITOR	100	
C16	NCB31HK-103	CER.CAPACITOR	0.010	50V
C17	NCB31HK-103	CER.CAPACITOR	0.010	50V
C18	NEZ0001-107	E.CAPACITOR	100	
C19	NCB31HK-103	CER.CAPACITOR	0.010	50V
C20	NCB31HK-103	CER.CAPACITOR	0.010	50V
C21	NCS31HJ-271	CER.CAPACITOR	270P	50V
C22	NCS31HJ-121	CER.CAPACITOR	120P	50V
C23	NCF31CZ-104	CER.CAPACITOR	0.10	16V
C24	NCF31CZ-104	CER.CAPACITOR	0.10	16V
C25	NFV41HJ-104	FILM CAPACITOR	0.10	50V
C26	NCB31HK-103	CER.CAPACITOR	0.010	50V
C27	NCF31CZ-104	CER.CAPACITOR	0.10	16V
C28	NEH91HM-105	E.CAPACITOR	1.0	50V
C29	NCB31HK-103	CER.CAPACITOR	0.010	50V
C30	NEZ0001-107	E.CAPACITOR	100	
C31	NCB31HK-103	CER.CAPACITOR	0.010	50V
C32	NCB31HK-103	CER.CAPACITOR	0.010	50V
C33	NCS31HJ-471	CER.CAPACITOR	470P	50V
C34	NCS31HJ-151	CER.CAPACITOR	150P	50V
C35	NCB31HK-103	CER.CAPACITOR	0.010	50V

Symbol No.	Part No.	Part Name	Description	
C36	NCF31CZ-104	CER.CAPACITOR	0.10	16V
C37	NCB31HK-103	CER.CAPACITOR	0.010	50V
C38	NCF31CZ-104	CER.CAPACITOR	0.10	16V
C39	NCB31HK-103	CER.CAPACITOR	0.010	50V
C40	NCF31CZ-104	CER.CAPACITOR	0.10	16V
C41	NCB31HK-103	CER.CAPACITOR	0.010	50V
C42	NCF31CZ-104	CER.CAPACITOR	0.10	16V
C43	NCF31CZ-104	CER.CAPACITOR	0.10	16V
C44	NCS31HJ-101	CER.CAPACITOR	100P	50V
C45	NCS31HJ-680	CER.CAPACITOR	68P	50V
C46	NCB31HK-103	CER.CAPACITOR	0.010	50V
C47	NEH91CM-476	E.CAPACITOR	47	16V
C48	NCB31HK-103	CER.CAPACITOR	0.010	50V
C49	NCB31HK-103	CER.CAPACITOR	0.010	50V
C50	NEZ0001-107	E.CAPACITOR	100	
C51	NCB31HK-103	CER.CAPACITOR	0.010	50V
C52	NCB31HK-103	CER.CAPACITOR	0.010	50V
C53	NEZ0001-107	E.CAPACITOR	100	
C54	NCB31HK-103	CER.CAPACITOR	0.010	50V
C55	NCB31HK-103	CER.CAPACITOR	0.010	50V
C56	NEN21AM-106	NP.CAPACITOR	10	10V
C57	NCB31HK-103	CER.CAPACITOR	0.010	50V
C58	NCB31HK-103	CER.CAPACITOR	0.010	50V
C59	NEH91HM-105	E.CAPACITOR	1.0	50V
C60	NEF11CM-106	TAN.CAPACITOR	10	16V
C61	NFV41HJ-102	FILM CAPACITOR	1000P	50V
C62	NCB31HK-103	CER.CAPACITOR	0.010	50V
C63	NEF11CM-106	TAN.CAPACITOR	10	16V
C64	NFV41HJ-102	FILM CAPACITOR	1000P	50V
C65	NCB31HK-103	CER.CAPACITOR	0.010	50V
C68	NEZ0001-107	E.CAPACITOR	100	
C69	NCB31HK-103	CER.CAPACITOR	0.010	50V
C70	NCB31HK-103	CER.CAPACITOR	0.010	50V
C74	NCF31CZ-104	CER.CAPACITOR	0.10	16V
C76	NCB31HK-103	CER.CAPACITOR	0.010	50V
C77	NCF31CZ-104	CER.CAPACITOR	0.10	16V
C78	NCB31HK-103	CER.CAPACITOR	0.010	50V
C79	NEZ0001-107	E.CAPACITOR	100	
C80	NCB31HK-103	CER.CAPACITOR	0.010	50V
C81	NCB31HK-103	CER.CAPACITOR	0.010	50V
C82	NEZ0001-107	E.CAPACITOR	100	
C83	NCB31HK-103	CER.CAPACITOR	0.010	50V
C84	NCB31HK-103	CER.CAPACITOR	0.010	50V
C85	NCB31HK-103	CER.CAPACITOR	0.010	50V
C301	NEH91HM-105	E.CAPACITOR	1.0	50V
C302	NEH91HM-105	E.CAPACITOR	1.0	50V
C303	NCB31HK-103	CER.CAPACITOR	0.010	50V
C304	NEH91CM-476	E.CAPACITOR	47	16V
C305	NCB31HK-103	CER.CAPACITOR	0.010	50V
C306	NCB31HK-103	CER.CAPACITOR	0.010	50V
C307	NEH91CM-476	E.CAPACITOR	47	16V
C308	NCB31HK-103	CER.CAPACITOR	0.010	50V
C309	NCB31HK-103	CER.CAPACITOR	0.010	50V
C310	NCF31CZ-104	CER.CAPACITOR	0.10	16V
C311	NCF31CZ-104	CER.CAPACITOR	0.10	16V
C312	NCB31HK-103	CER.CAPACITOR	0.010	50V
C313	NCB31HK-103	CER.CAPACITOR	0.010	50V
C314	NEZ0001-107	E.CAPACITOR	100	
C315	NCS31HJ-471	CER.CAPACITOR	470P	50V

[OUT/GEN]

Symbol No.	Part No.	Part Name	Description	
C316	NCS31HJ-151	CER.CAPACITOR	150P	50V
C317	NCB31HK-103	CER.CAPACITOR	0.010	50V
C318	NCS31HJ-471	CER.CAPACITOR	470P	50V
C319	NCS31HJ-151	CER.CAPACITOR	150P	50V
C320	NCB31HK-103	CER.CAPACITOR	0.010	50V
C321	NCB31HK-103	CER.CAPACITOR	0.010	50V
C322	NCB31HK-103	CER.CAPACITOR	0.010	50V
C323	NEH90JM-107	E.CAPACITOR	100	6.3V
C324	NCB31HK-103	CER.CAPACITOR	0.010	50V
C325	NCB31HK-103	CER.CAPACITOR	0.010	50V
C326	NCB31HK-103	CER.CAPACITOR	0.010	50V
C327	NEF11EM-474	TAN.CAPACITOR	0.47	25V
C328	NCS31HJ-180	CER.CAPACITOR	18P	50V
C329	NCS31HJ-100	CER.CAPACITOR	10P	50V
C330	NCB31HK-103	CER.CAPACITOR	0.010	50V
C331	NCB31HK-103	CER.CAPACITOR	0.010	50V
C332	NCB31HK-103	CER.CAPACITOR	0.010	50V
C333	NCB31HK-103	CER.CAPACITOR	0.010	50V
C334	NCS31HJ-100	CER.CAPACITOR	10P	50V
C335	NFV41HJ-104	FILM CAPACITOR	0.10	50V
C336	NCS31HJ-101	CER.CAPACITOR	100P	50V
C337	NCB31HK-103	CER.CAPACITOR	0.010	50V
C338	NEH90JM-476	E.CAPACITOR	47	6.3V
C339	NEH90JM-476	E.CAPACITOR	47	6.3V
C340	NCB31HK-103	CER.CAPACITOR	0.010	50V
C341	NCB31HK-103	CER.CAPACITOR	0.010	50V
C342	NCS31HJ-221	CER.CAPACITOR	220P	50V
C343	NCS31HJ-101	CER.CAPACITOR	100P	50V
C344	NCS31HJ-180	CER.CAPACITOR	18P	50V
C345	NCS31HJ-121	CER.CAPACITOR	120P	50V
C346	NCS31HJ-120	CER.CAPACITOR	12P	50V
C347	NCB31HK-103	CER.CAPACITOR	0.010	50V
C348	NCB31HK-103	CER.CAPACITOR	0.010	50V
C349	NEZ0001-107	E.CAPACITOR	100	
C350	NCB31HK-103	CER.CAPACITOR	0.010	50V
C351	NCB31HK-103	CER.CAPACITOR	0.010	50V
C352	NEZ0001-107	E.CAPACITOR	100	
C353	NCB31HK-103	CER.CAPACITOR	0.010	50V
C354	NCB31HK-103	CER.CAPACITOR	0.010	50V
C355	NCS31EJ-102	CER.CAPACITOR	1000P	25V
C356	NCB31HK-103	CER.CAPACITOR	0.010	50V
C357	NEZ0001-107	E.CAPACITOR	100	
C358	NCB31HK-103	CER.CAPACITOR	0.010	50V
C359	NCB31HK-103	CER.CAPACITOR	0.010	50V
C360	NCB31HK-103	CER.CAPACITOR	0.010	50V
C361	NCB31HK-103	CER.CAPACITOR	0.010	50V
C362	NCB31HK-103	CER.CAPACITOR	0.010	50V
C363	NCB31HK-103	CER.CAPACITOR	0.010	50V
C364	NCB31HK-103	CER.CAPACITOR	0.010	50V
C365	NCB31HK-103	CER.CAPACITOR	0.010	50V
C366	NCB31HK-103	CER.CAPACITOR	0.010	50V
C367	NCB31HK-103	CER.CAPACITOR	0.010	50V
C368	NEZ0001-107	E.CAPACITOR	100	
C369	NCB31HK-103	CER.CAPACITOR	0.010	50V
C370	NCB31HK-103	CER.CAPACITOR	0.010	50V
C371	NCB31HK-103	CER.CAPACITOR	0.010	50V
C372	NCB31HK-103	CER.CAPACITOR	0.010	50V
C373	NCB31HK-103	CER.CAPACITOR	0.010	50V
C374	NCB31HK-103	CER.CAPACITOR	0.010	50V

Symbol No.	Part No.	Part Name	Description	
C375	NCB31HK-103	CER.CAPACITOR	0.010	50V
C376	NCB31HK-103	CER.CAPACITOR	0.010	50V
C377	NCS31HJ-5R0	CER.CAPACITOR	5.0P	50V
C378	NCB31HK-103	CER.CAPACITOR	0.010	50V
C379	NFV41HJ-102	FILM CAPACITOR	1000P	50V
C380	NCB31HK-103	CER.CAPACITOR	0.010	50V
C381	QFN31HJ-222	MY.CAPACITOR	2200P	50V
C601	NEZ0001-107	E.CAPACITOR	100	
C602	NCB31HK-103	CER.CAPACITOR	0.010	50V
C603	NCB31HK-103	CER.CAPACITOR	0.010	50V
C604	NFV41HJ-332	FILM CAPACITOR	3300P	50V
C605	NFV41HJ-222	FILM CAPACITOR	2200P	50V
C606	NCF31CZ-104	CER.CAPACITOR	0.10	16V
C607	NCB31HK-103	CER.CAPACITOR	0.010	50V
C608	NFV41HJ-222	FILM CAPACITOR	2200P	50V
C609	NCB31HK-103	CER.CAPACITOR	0.010	50V
C610	NCB31HK-103	CER.CAPACITOR	0.010	50V
C611	NCB31HK-103	CER.CAPACITOR	0.010	50V
C612	NCS31HJ-100	CER.CAPACITOR	10P	50V
C613	NEH90JM-336	E.CAPACITOR	33	6.3V
C614	NEH91CM-476	E.CAPACITOR	47	16V
C615	NCB31HK-103	CER.CAPACITOR	0.010	50V
C616	NCB31HK-103	CER.CAPACITOR	0.010	50V
C617	NEH91CM-476	E.CAPACITOR	47	16V
C618	NCB31HK-103	CER.CAPACITOR	0.010	50V
C619	NCB31HK-103	CER.CAPACITOR	0.010	50V
C620	NEZ0001-107	E.CAPACITOR	100	
C621	NCB31HK-103	CER.CAPACITOR	0.010	50V
C622	NCB31HK-103	CER.CAPACITOR	0.010	50V
C623	NFV41HJ-332	FILM CAPACITOR	3300P	50V
C624	NFV41HJ-222	FILM CAPACITOR	2200P	50V
C625	NCF31CZ-104	CER.CAPACITOR	0.10	16V
C626	NCB31HK-103	CER.CAPACITOR	0.010	50V
C627	NFV41HJ-222	FILM CAPACITOR	2200P	50V
C628	NCB31HK-103	CER.CAPACITOR	0.010	50V
C629	NCB31HK-103	CER.CAPACITOR	0.010	50V
C630	NCB31HK-103	CER.CAPACITOR	0.010	50V
C631	NCS31HJ-100	CER.CAPACITOR	10P	50V
C632	NEH90JM-336	E.CAPACITOR	33	6.3V
C633	NEZ0001-107	E.CAPACITOR	100	
C634	NCB31HK-103	CER.CAPACITOR	0.010	50V
C635	NCB31HK-103	CER.CAPACITOR	0.010	50V
C636	NEH91CM-476	E.CAPACITOR	47	16V
C637	NCB31HK-103	CER.CAPACITOR	0.010	50V
C638	NCB31HK-103	CER.CAPACITOR	0.010	50V
C639	NEH91CM-476	E.CAPACITOR	47	16V
C640	NCB31HK-103	CER.CAPACITOR	0.010	50V
C641	NCB31HK-103	CER.CAPACITOR	0.010	50V
C642	NEZ0001-107	E.CAPACITOR	100	
C643	NCB31HK-103	CER.CAPACITOR	0.010	50V
C644	NCB31HK-103	CER.CAPACITOR	0.010	50V
C645	NFV41HJ-332	FILM CAPACITOR	3300P	50V
C646	NFV41HJ-222	FILM CAPACITOR	2200P	50V
C647	NCF31CZ-104	CER.CAPACITOR	0.10	16V
C648	NCB31HK-103	CER.CAPACITOR	0.010	50V
C649	NFV41HJ-222	FILM CAPACITOR	2200P	50V
C650	NCB31HK-103	CER.CAPACITOR	0.010	50V
C651	NCB31HK-103	CER.CAPACITOR	0.010	50V
C652	NCB31HK-103	CER.CAPACITOR	0.010	50V

Symbol No.	Part No.	Part Name	Description	
C653	NEH90JM-336	E.CAPACITOR	33	6.3V
C654	NEH91CM-476	E.CAPACITOR	47	16V
C655	NCB31HK-103	CER.CAPACITOR	0.010	50V
C656	NCB31HK-103	CER.CAPACITOR	0.010	50V
C657	NEH91CM-476	E.CAPACITOR	47	16V
C658	NCB31HK-103	CER.CAPACITOR	0.010	50V
C659	NCB31HK-103	CER.CAPACITOR	0.010	50V
C660	NEZ0001-107	E.CAPACITOR	100	
C661	NCB31HK-103	CER.CAPACITOR	0.010	50V
C662	NCB31HK-103	CER.CAPACITOR	0.010	50V
C663	NFV41HJ-332	FILM CAPACITOR	3300P	50V
C664	NFV41HJ-222	FILM CAPACITOR	2200P	50V
C665	NCF31CZ-104	CER.CAPACITOR	0.10	16V
C666	NCB31HK-103	CER.CAPACITOR	0.010	50V
C667	NFV41HJ-222	FILM CAPACITOR	2200P	50V
C668	NCB31HK-103	CER.CAPACITOR	0.010	50V
C669	NCB31HK-103	CER.CAPACITOR	0.010	50V
C670	NCB31HK-103	CER.CAPACITOR	0.010	50V
C671	NEH90JM-336	E.CAPACITOR	33	6.3V
C672	NEZ0001-107	E.CAPACITOR	100	
C673	NCB31HK-103	CER.CAPACITOR	0.010	50V
C674	NCB31HK-103	CER.CAPACITOR	0.010	50V
C675	NEH91CM-476	E.CAPACITOR	47	16V
C676	NCB31HK-103	CER.CAPACITOR	0.010	50V
C677	NCB31HK-103	CER.CAPACITOR	0.010	50V
C678	NEH91CM-476	E.CAPACITOR	47	16V
C679	NCB31HK-103	CER.CAPACITOR	0.010	50V
C680	NCB31HK-103	CER.CAPACITOR	0.010	50V
C681	NEZ0001-107	E.CAPACITOR	100	
C682	NEZ0001-107	E.CAPACITOR	100	
C683	NEZ0001-107	E.CAPACITOR	100	
C684	NEZ0001-107	E.CAPACITOR	100	
C685	NEH91CM-476	E.CAPACITOR	47	16V
C686	NCB31HK-103	CER.CAPACITOR	0.010	50V
C687	NCB31HK-103	CER.CAPACITOR	0.010	50V
C688	NCB31HK-103	CER.CAPACITOR	0.010	50V
C689	NEZ0001-107	E.CAPACITOR	100	
C690	NEZ0001-107	E.CAPACITOR	100	
C691	NCS31HJ-121	CER.CAPACITOR	120P	50V
C692	NCB31HK-103	CER.CAPACITOR	0.010	50V
C693	NCB31HK-103	CER.CAPACITOR	0.010	50V
C694	NFV41HJ-332	FILM CAPACITOR	3300P	50V
C695	NFV41HJ-222	FILM CAPACITOR	2200P	50V
C696	NCF31CZ-104	CER.CAPACITOR	0.10	16V
C697	NCB31HK-103	CER.CAPACITOR	0.010	50V
C698	NFV41HJ-222	FILM CAPACITOR	2200P	50V
C699	NCB31HK-103	CER.CAPACITOR	0.010	50V
C700	NCB31HK-103	CER.CAPACITOR	0.010	50V
C701	NCB31HK-103	CER.CAPACITOR	0.010	50V
C702	NEH90JM-336	E.CAPACITOR	33	6.3V
C703	NEH90JM-336	E.CAPACITOR	33	6.3V
C704	NEZ0001-107	E.CAPACITOR	100	
C705	NCB31HK-103	CER.CAPACITOR	0.010	50V
C706	NCB31HK-103	CER.CAPACITOR	0.010	50V
C707	NEH91CM-476	E.CAPACITOR	47	16V
C708	NCB31HK-103	CER.CAPACITOR	0.010	50V
C709	NCB31HK-103	CER.CAPACITOR	0.010	50V
C710	NEH91CM-476	E.CAPACITOR	47	16V
C711	NCB31HK-103	CER.CAPACITOR	0.010	50V

Symbol No.	Part No.	Part Name	Description	
C712	NCB31HK-103	CER.CAPACITOR	0.010	50V
C713	NCF31CZ-104	CER.CAPACITOR	0.10	16V
C714	NCF31CZ-104	CER.CAPACITOR	0.10	16V
C715	NCF31CZ-104	CER.CAPACITOR	0.10	16V
C716	NCF31CZ-104	CER.CAPACITOR	0.10	16V
C717	NCB31HK-103	CER.CAPACITOR	0.010	50V
C718	NCB31HK-103	CER.CAPACITOR	0.010	50V
C719	NCS31HJ-100	CER.CAPACITOR	10P	50V
C720	NEH90JM-336	E.CAPACITOR	33	6.3V
C721	NEH91CM-476	E.CAPACITOR	47	16V
C722	NCB31HK-103	CER.CAPACITOR	0.010	50V
C723	NCB31HK-103	CER.CAPACITOR	0.010	50V
C724	NEH91CM-476	E.CAPACITOR	47	16V
C725	NCB31HK-103	CER.CAPACITOR	0.010	50V
C726	NCB31HK-103	CER.CAPACITOR	0.010	50V
C727	NCS31HJ-5R0	CER.CAPACITOR	5.0P	50V
C728	NCS31HJ-470	CER.CAPACITOR	47P	50V
C729	NCB31HK-103	CER.CAPACITOR	0.010	50V
C730	NCB31HK-103	CER.CAPACITOR	0.010	50V
C731	NEH90JM-336	E.CAPACITOR	33	6.3V
C732	NEZ0001-107	E.CAPACITOR	100	
C733	NCB31HK-103	CER.CAPACITOR	0.010	50V
C734	NCB31HK-103	CER.CAPACITOR	0.010	50V
C735	NCF31CZ-104	CER.CAPACITOR	0.10	16V
L1	PU58201-180	COIL	18μ	
L2	PU58201-101	COIL	100μ	
L3	PU58201-100	COIL	10μ	
L301	PU58201-470	COIL	47μ	
L302	PU58201-1R8	COIL	1.8μ	
L601	PU58201-180	COIL	18μ	
L602	PU58201-330	COIL	33μ	
LC1	PGZ01972	NOISE FILTER		
LC301	PGZ01972	NOISE FILTER		
LC302	PGZ01972	NOISE FILTER		
LC303	PGZ01972	NOISE FILTER		
LC304	PGZ01972	NOISE FILTER		
LC305	PGZ01972	NOISE FILTER		
X1	PGZ01521	CRYSTAL	14.31818MHz	
X301	PGZ02178	CRYSTAL	54MHz	
S301	SCV2588-001	ROTARY CODED SW	SYNC PHASE	
CN1	PGZ02142-120	CONNECTOR	120PIN	
CN2	PGZ02142-100	CONNECTOR	100PIN	
TP1	SCV1880-001	TEST POINT		
TP2	SCV1880-001	TEST POINT		
TP3	SCV1880-001	TEST POINT		
TP4	SCV1880-001	TEST POINT		
TP5	SCV1880-001	TEST POINT		
TP6	SCV1880-001	TEST POINT		
TP7	SCV1880-001	TEST POINT		
TP8	SCV1880-001	TEST POINT		
TP9	SCV1880-001	TEST POINT		
TP10	SCV1880-001	TEST POINT		

)UT/GEN]

Symbol No.	Part No.	Part Name	Description
TP11	SCV1880-001	TEST POINT	
TP12	SCV1880-001	TEST POINT	
TP13	SCV1880-001	TEST POINT	
TP14	SCV1880-001	TEST POINT	
TP15	SCV1880-001	TEST POINT	
TP16	SCV1880-001	TEST POINT	
TP51	SCV1880-001	TEST POINT	
TP52	SCV1880-001	TEST POINT	
TP53	SCV1880-001	TEST POINT	
TP54	SCV1880-001	TEST POINT	
TP55	SCV1880-001	TEST POINT	
TP56	SCV1880-001	TEST POINT	
TP301	SCV1880-001	TEST POINT	
TP302	SCV1880-001	TEST POINT	
TP303	SCV1880-001	TEST POINT	
TP304	SCV1880-001	TEST POINT	
TP305	SCV1880-001	TEST POINT	
TP306	SCV1880-001	TEST POINT	
TP307	SCV1880-001	TEST POINT	
TP308	SCV1880-001	TEST POINT	
TP309	SCV1880-001	TEST POINT	
TP310	SCV1880-001	TEST POINT	
TP311	SCV1880-001	TEST POINT	
TP312	SCV1880-001	TEST POINT	
TP313	SCV1880-001	TEST POINT	
TP314	SCV1880-001	TEST POINT	
TP351	SCV1880-001	TEST POINT	
TP352	SCV1880-001	TEST POINT	
TP353	SCV1880-001	TEST POINT	
TP354	SCV1880-001	TEST POINT	
TP381	SCV1880-001	TEST POINT	
TP382	SCV1880-001	TEST POINT	
TP601	SCV1880-001	TEST POINT	
TP602	SCV1880-001	TEST POINT	
TP603	SCV1880-001	TEST POINT	
TP604	SCV1880-001	TEST POINT	
TP605	SCV1880-001	TEST POINT	
TP606	SCV1880-001	TEST POINT	
TP607	SCV1880-001	TEST POINT	
TP608	SCV1880-001	TEST POINT	
TP609	SCV1880-001	TEST POINT	
TP651	SCV1880-001	TEST POINT	
TP652	SCV1880-001	TEST POINT	
TP653	SCV1880-001	TEST POINT	
TP654	SCV1880-001	TEST POINT	
TP655	SCV1880-001	TEST POINT	
TP656	SCV1880-001	TEST POINT	
TP657	SCV1880-001	TEST POINT	
TB1	PGZ02228	EARTH LUG	
TB2	PGZ02228	EARTH LUG	
TB3	PGZ02228	EARTH LUG	
TB4	PGZ02228	EARTH LUG	
SL1	PRD42674	SHIELD PLATE	
SL2	PRD20530	SHIELD CASE	
SC1	DPSP2606Z	SCREW	M2.6×6
SP1	PGZ00582	SPACER	

6.9 RF PROCESS2 BOARD ASSEMBLY LIST [1][8]

SLK1035-M2A [1][8]□□□□□□

Symbol No.	Part No.	Part Name	Description
IC1	TC4053BF	I.C.(M)	TOSHIBA
IC2	SSI32F8001	I.C.(M)	TDK
IC3	CLC520AJE-T2	I.C.(M)	COMLINER
IC4	CLC401AJE-T2	I.C.(M)	COMLINER
IC5	LM360M	I.C.(M)	NS
IC6	UPC4074G2	I.C.(M)	NEC
IC7	NJM7805FA	I.C.(M)	JRC
IC8	NJM79M05FA	I.C.(M)	JRC
IC10	JCL0027	I.C.(M)	JVC
IC11	DS90C031TM	I.C.(M)	NATIONAL SEMICO
IC12	TC74VHCT04F	I.C.(M)	TOSHIBA
IC13	LM318M	I.C.(M)	NS
IC14	MC10H116M	I.C.(M)	MOTOROLA
IC15	UPC4074G2	I.C.(M)	NEC
IC16	TC4053BF	I.C.(M)	TOSHIBA
IC20	MC10H125M	I.C.(M)	MOTOROLA
IC21	TC74VHC04F	I.C.(M)	TOSHIBA
IC22	TC7W04F	I.C.(M)	TOSHIBA
IC28	UPC4074G2	I.C.(M)	NEC
IC30	MC33269DR2-3.3	I.C.(M)	MOTOROLA
IC32	TC74HC08AF	I.C.(M)	TOSHIBA
IC33	MC74HC74AF	I.C.(M)	MOTOROLA
Q1	2SC3735(45)	TRANSISTOR	NEC
Q2	2SC3735(45)	TRANSISTOR	NEC
Q3	2SC3735(45)	TRANSISTOR	NEC
Q4	2SC3735(45)	TRANSISTOR	NEC
Q5	2SC3735(45)	TRANSISTOR	NEC
Q6	2SC3735(45)	TRANSISTOR	NEC
Q7	2SA1462Y3Y4	TRANSISTOR	NEC
Q8	2SC3735(45)	TRANSISTOR	NEC
Q9	2SC3735(45)	TRANSISTOR	NEC
Q10	2SC3735(45)	TRANSISTOR	NEC
Q11	2SC3735(45)	TRANSISTOR	NEC
Q12	2SA1462Y3Y4	TRANSISTOR	NEC
Q13	2SC3735(45)	TRANSISTOR	NEC
Q14	2SC3735(45)	TRANSISTOR	NEC
Q15	2SC3735(45)	TRANSISTOR	NEC
Q16	2SA1462Y3Y4	TRANSISTOR	NEC
Q17	FA1A4M	TRANSISTOR	
Q18	2SA1462Y3Y4	TRANSISTOR	NEC
Q19	2SA1462Y3Y4	TRANSISTOR	NEC
Q20	2SA1462Y3Y4	TRANSISTOR	NEC
Q21	2SC3735(45)	TRANSISTOR	NEC
Q22	2SC3735(45)	TRANSISTOR	NEC
Q23	2SC3735(45)	TRANSISTOR	NEC
Q24	2SC3735(45)	TRANSISTOR	NEC
Q25	2SA1462Y3Y4	TRANSISTOR	NEC
Q26	2SA1462Y3Y4	TRANSISTOR	NEC
Q27	2SA1462Y3Y4	TRANSISTOR	NEC
Q28	FA1A4M	TRANSISTOR	NEC
Q29	FA1A4M	TRANSISTOR	NEC
Q30	FA1A4M	TRANSISTOR	NEC
Q31	FA1A4M	TRANSISTOR	NEC
Q32	2SA1462Y3Y4	TRANSISTOR	NEC
Q33	2SA1462Y3Y4	TRANSISTOR	NEC
Q38	2SK1228	F.E.T.	MATSUSHITA
Q39	FA1A4M	TRANSISTOR	NEC

Symbol No.	Part No.	Part Name	Description	
Q40	FA1A4M	TRANSISTOR	NEC	
Q41	FA1A4M	TRANSISTOR	NEC	
Q42	FA1A4M	TRANSISTOR	NEC	
Q43	FA1A4M	TRANSISTOR	NEC	
Q44	FA1A4M	TRANSISTOR	NEC	
Q45	FA1A4M	TRANSISTOR	NEC	
Q66	FA1A4M	TRANSISTOR	NEC	
Q100	2SC3735(45)	TRANSISTOR	NEC	
D1	RB731U	DIODE	ROHM	
D2	RB731U	DIODE	ROHM	
D3	RB731U	DIODE	ROHM	
D4	RB731U	DIODE	ROHM	
D5	DAN202K	DIODE	ROHM	
D6	RB731U	DIODE	ROHM	
D7	DAN202K	DIODE	ROHM	
LD1	SLR-55MC3F	LED		
R1	NRSA63J-220	M.G.RESISTOR	22	1/16W
R2	NRSA63J-820	M.G.RESISTOR	82	1/16W
R3	NRSA63J-221	M.G.RESISTOR	220	1/16W
R4	NRSA63J-101	M.G.RESISTOR	100	1/16W
R5	NRSA63J-103	M.G.RESISTOR	10K	1/16W
R6	NRSA63J-100	M.G.RESISTOR	10	1/16W
R7	NRSA63J-223	M.G.RESISTOR	22K	1/16W
R8	NRSA63J-103	M.G.RESISTOR	10K	1/16W
R9	NRSA63J-100	M.G.RESISTOR	10	1/16W
R10	NRSA63J-223	M.G.RESISTOR	22K	1/16W
R11	NRSA63J-102	M.G.RESISTOR	1.0K	1/16W
R12	NRSA63J-103	M.G.RESISTOR	10K	1/16W
R13	NRSA63J-560	M.G.RESISTOR	56	1/16W
R14	NRSA63J-102	M.G.RESISTOR	1.0K	1/16W
R15	NRSA63J-183	M.G.RESISTOR	18K	1/16W
R16	NRSA63J-103	M.G.RESISTOR	10K	1/16W
R17	NRSA63J-100	M.G.RESISTOR	10	1/16W
R18	NRSA63J-681	M.G.RESISTOR	680	1/16W
R19	NRSA63J-471	M.G.RESISTOR	470	1/16W
R20	NRSA63J-470	M.G.RESISTOR	47	1/16W
R21	NRSA63J-182	M.G.RESISTOR	1.8K	1/16W
R22	NRSA63J-100	M.G.RESISTOR	10	1/16W
R23	NRSA63J-102	M.G.RESISTOR	1.0K	1/16W
R24	NRSA63J-331	M.G.RESISTOR	330	1/16W
R25	NRSA63J-181	M.G.RESISTOR	180	1/16W
R26	NRSA63J-151	M.G.RESISTOR	150	1/16W
R27	NRSA63J-331	M.G.RESISTOR	330	1/16W
R28	NRSA63J-221	M.G.RESISTOR	220	1/16W
R29	NRSA63J-100	M.G.RESISTOR	10	1/16W
R30	NRSA63J-392	M.G.RESISTOR	3.9K	1/16W
R31	NRSA63J-223	M.G.RESISTOR	22K	1/16W
R32	NRSA63J-392	M.G.RESISTOR	3.9K	1/16W
R33	NRSA63J-223	M.G.RESISTOR	22K	1/16W
R34	NRSA63J-102	M.G.RESISTOR	1.0K	1/16W
R35	NRSA63J-102	M.G.RESISTOR	1.0K	1/16W
R36	NRSA63J-102	M.G.RESISTOR	1.0K	1/16W
R37	NRSA63J-151	M.G.RESISTOR	150	1/16W
R38	NRSA63J-102	M.G.RESISTOR	1.0K	1/16W
R39	NRSA63J-102	M.G.RESISTOR	1.0K	1/16W

Symbol No.	Part No.	Part Name	Description	
R40	NRSA63J-182	M.G.RESISTOR	1.8K	1/16W
R41	NRSA63J-222	M.G.RESISTOR	2.2K	1/16W
R42	NRSA63J-102	M.G.RESISTOR	1.0K	1/16W
R43	NRSA63J-181	M.G.RESISTOR	180	1/16W
R44	NRSA63J-101	M.G.RESISTOR	100	1/16W
R45	NRSA63J-102	M.G.RESISTOR	1.0K	1/16W
R46	NRSA63J-151	M.G.RESISTOR	150	1/16W
R47	NRSA63J-151	M.G.RESISTOR	150	1/16W
R48	NRSA63J-181	M.G.RESISTOR	180	1/16W
R49	NRSA63J-471	M.G.RESISTOR	470	1/16W
R50	NRSA63J-181	M.G.RESISTOR	180	1/16W
R51	NRSA63J-472	M.G.RESISTOR	4.7K	1/16W
R53	NRSA63J-101	M.G.RESISTOR	100	1/16W
R54	NRSA63J-100	M.G.RESISTOR	10	1/16W
R56	NRSA63J-221	M.G.RESISTOR	220	1/16W
R57	NRSA63J-223	M.G.RESISTOR	22K	1/16W
R58	NRSA63J-123	M.G.RESISTOR	12K	1/16W
R59	NRSA63J-561	M.G.RESISTOR	560	1/16W
R60	NRSA63J-102	M.G.RESISTOR	1.0K	1/16W
R61	NRSA63J-221	M.G.RESISTOR	220	1/16W
R62	NRSA63J-560	M.G.RESISTOR	56	1/16W
R63	NRSA63J-102	M.G.RESISTOR	1.0K	1/16W
R64	NRSA63J-103	M.G.RESISTOR	10K	1/16W
R65	NRSA63J-222	M.G.RESISTOR	2.2K	1/16W
R66	NRSA63J-103	M.G.RESISTOR	10K	1/16W
R67	NRSA63J-821	M.G.RESISTOR	820	1/16W
R68	NRSA63J-510	M.G.RESISTOR	51	1/16W
R69	NRSA63J-152	M.G.RESISTOR	1.5K	1/16W
R70	NRSA63J-222	M.G.RESISTOR	2.2K	1/16W
R71	NRSA63J-221	M.G.RESISTOR	220	1/16W
R72	NRSA63J-822	M.G.RESISTOR	8.2K	1/16W
R73	NRSA63J-122	M.G.RESISTOR	1.2K	1/16W
R74	NRSA63J-221	M.G.RESISTOR	220	1/16W
R75	NRSA63J-822	M.G.RESISTOR	8.2K	1/16W
R76	NRSA63J-122	M.G.RESISTOR	1.2K	1/16W
R77	NRSA63J-103	M.G.RESISTOR	10K	1/16W
R78	NRSA63J-100	M.G.RESISTOR	10	1/16W
R79	NRVA63D-473	M.F.RESISTOR	47K	1/16W
R80	NRVA63D-273	M.F.RESISTOR	27K	1/16W
R81	NRSA63J-100	M.G.RESISTOR	10	1/16W
R82	NRVA63D-333	M.F.RESISTOR	33K	1/16W
R83	NRVA63D-183	M.F.RESISTOR	18K	1/16W
R84	NRSA63J-223	M.G.RESISTOR	22K	1/16W
R85	NRSA63J-393	M.G.RESISTOR	39K	1/16W
R86	NRSA63J-472	M.G.RESISTOR	4.7K	1/16W
R87	NRSA63J-152	M.G.RESISTOR	1.5K	1/16W
R88	NRSA63J-152	M.G.RESISTOR	1.5K	1/16W
R89	NRSA63J-122	M.G.RESISTOR	1.2K	1/16W
R90	NRSA63J-471	M.G.RESISTOR	470	1/16W
R91	NRSA63J-331	M.G.RESISTOR	330	1/16W
R92	NRSA63J-561	M.G.RESISTOR	560	1/16W
R93	NRSA63J-392	M.G.RESISTOR	3.9K	1/16W
R94	NRSA63J-100	M.G.RESISTOR	10	1/16W
R95	NRSA63J-182	M.G.RESISTOR	1.8K	1/16W
R96	NRSA63J-471	M.G.RESISTOR	470	1/16W
R97	NRSA63J-100	M.G.RESISTOR	10	1/16W
R98	NRSA63J-103	M.G.RESISTOR	10K	1/16W
R99	NRSA63J-183	M.G.RESISTOR	18K	1/16W
R100	NRSA63J-470	M.G.RESISTOR	47	1/16W

[RF PROCESS2]

Symbol No.	Part No.	Part Name	Description	
R101	NRSA63J-100	M.G.RESISTOR	10	1/16W
R102	NRSA63J-471	M.G.RESISTOR	470	1/16W
R103	NRSA63J-822	M.G.RESISTOR	8.2K	1/16W
R104	NRSA63J-152	M.G.RESISTOR	1.5K	1/16W
R105	NRSA63J-103	M.G.RESISTOR	10K	1/16W
R106	NRSA63J-103	M.G.RESISTOR	10K	1/16W
R107	NRSA63J-104	M.G.RESISTOR	100K	1/16W
R108	NRSA63J-510	M.G.RESISTOR	51	1/16W
R109	NRSA63J-470	M.G.RESISTOR	47	1/16W
R110	NRSA63J-103	M.G.RESISTOR	10K	1/16W
R113	NRSA63J-220	M.G.RESISTOR	22	1/16W
R114	NRSA63J-100	M.G.RESISTOR	10	1/16W
R115	NRSA63J-100	M.G.RESISTOR	10	1/16W
R116	NRSA63J-102	M.G.RESISTOR	1.0K	1/16W
R117	NRSA63J-102	M.G.RESISTOR	1.0K	1/16W
R118	NRSA63J-0R0	M.G.RESISTOR	0	1/16W
R119	NRSA63J-100	M.G.RESISTOR	10	1/16W
R120	NRSA63J-0R0	M.G.RESISTOR	0	1/16W
R121	NRSA63J-100	M.G.RESISTOR	10	1/16W
R122	NRSA63J-104	M.G.RESISTOR	10K	1/16W
R123	NRSA63J-100	M.G.RESISTOR	10	1/16W
R125	NRSA63J-100	M.G.RESISTOR	10	1/16W
R126	NRSA63J-102	M.G.RESISTOR	1.0K	1/16W
R127	NRSA63J-100	M.G.RESISTOR	10	1/16W
R128	NRSA63J-102	M.G.RESISTOR	1.0K	1/16W
R129	NRSA63J-100	M.G.RESISTOR	10	1/16W
R131	NRSA63J-100	M.G.RESISTOR	10	1/16W
R133	NRSA63J-100	M.G.RESISTOR	10	1/16W
R134	NRSA63J-102	M.G.RESISTOR	1.0K	1/16W
R135	NRSA63J-100	M.G.RESISTOR	10	1/16W
R136	NRSA63J-100	M.G.RESISTOR	10	1/16W
R137	NRSA63J-333	M.G.RESISTOR	33K	1/16W
R138	NRSA63J-102	M.G.RESISTOR	1.0K	1/16W
R140	NRSA63J-222	M.G.RESISTOR	2.2K	1/16W
R141	NRSA63J-222	M.G.RESISTOR	2.2K	1/16W
R142	NRSA63J-222	M.G.RESISTOR	2.2K	1/16W
R143	NRSA63J-222	M.G.RESISTOR	2.2K	1/16W
R144	NRSA63J-103	M.G.RESISTOR	10K	1/16W
R145	NRSA63J-103	M.G.RESISTOR	10K	1/16W
R146	NRSA63J-103	M.G.RESISTOR	10K	1/16W
R147	NRSA63J-102	M.G.RESISTOR	1.0K	1/16W
R148	NRSA63J-102	M.G.RESISTOR	1.0K	1/16W
R149	NRSA63J-102	M.G.RESISTOR	1.0K	1/16W
R150	NRSA63J-102	M.G.RESISTOR	1.0K	1/16W
R151	NRSA63J-102	M.G.RESISTOR	1.0K	1/16W
R152	NRSA63J-102	M.G.RESISTOR	1.0K	1/16W
R153	NRSA63J-102	M.G.RESISTOR	1.0K	1/16W
R154	NRSA63J-102	M.G.RESISTOR	1.0K	1/16W
R155	NRSA63J-473	M.G.RESISTOR	47K	1/16W
R156	NRSA63J-102	M.G.RESISTOR	1.0K	1/16W
R157	NRSA63J-102	M.G.RESISTOR	1.0K	1/16W
R158	NRSA63J-102	M.G.RESISTOR	1.0K	1/16W
R159	NRSA63J-102	M.G.RESISTOR	1.0K	1/16W
R160	NRSA63J-102	M.G.RESISTOR	1.0K	1/16W
R161	NRSA63J-102	M.G.RESISTOR	1.0K	1/16W
R162	NRSA63J-102	M.G.RESISTOR	1.0K	1/16W
R163	NRSA63J-102	M.G.RESISTOR	1.0K	1/16W
R164	NRSA63J-102	M.G.RESISTOR	1.0K	1/16W
R165	NRSA63J-102	M.G.RESISTOR	1.0K	1/16W
R166	NRSA63J-102	M.G.RESISTOR	1.0K	1/16W

Symbol No.	Part No.	Part Name	Description	
R167	NRSA63J-102	M.G.RESISTOR	1.0K	1/16W
R168	NRSA63J-0R0	M.G.RESISTOR	0	1/16W
R169	NRSA63J-0R0	M.G.RESISTOR	0	1/16W
R170	NRSA63J-101	M.G.RESISTOR	100	1/16W
R171	NRSA63J-102	M.G.RESISTOR	1.0K	1/16W
R172	NRSA63J-222	M.G.RESISTOR	2.2K	1/16W
R173	NRSA63J-222	M.G.RESISTOR	2.2K	1/16W
R174	NRSA63J-102	M.G.RESISTOR	1.0K	1/16W
R175	NRSA63J-222	M.G.RESISTOR	2.2K	1/16W
R176	NRSA63J-222	M.G.RESISTOR	2.2K	1/16W
R177	NRSA63J-222	M.G.RESISTOR	2.2K	1/16W
R178	NRSA63J-222	M.G.RESISTOR	2.2K	1/16W
R179	NRSA63J-222	M.G.RESISTOR	2.2K	1/16W
R180	NRSA63J-222	M.G.RESISTOR	2.2K	1/16W
R181	NRSA63J-222	M.G.RESISTOR	2.2K	1/16W
R182	NRSA63J-222	M.G.RESISTOR	2.2K	1/16W
R183	NRSA63J-510	M.G.RESISTOR	51	1/16W
R184	NRSA63J-510	M.G.RESISTOR	51	1/16W
R185	NRSA63J-222	M.G.RESISTOR	2.2K	1/16W
R187	NRSA02J-180	M.G.RESISTOR	18	1/10W
R188	NRSA63J-102	M.G.RESISTOR	1.0K	1/16W
R189	NRSA63J-105	M.G.RESISTOR	1.0M	1/16W
R190	NRSA63J-105	M.G.RESISTOR	1.0M	1/16W
R191	NRSA63J-102	M.G.RESISTOR	1.0K	1/16W
R192	NRSA63J-471	M.G.RESISTOR	470	1/16W
R193	NRSA63J-0R0	M.G.RESISTOR	0	1/16W
R194	NRSA63J-0R0	M.G.RESISTOR	0	1/16W
R195	NRSA63J-102	M.G.RESISTOR	1.0K	1/16W
R196	NRSA63J-102	M.G.RESISTOR	1.0K	1/16W
R197	NRSA63J-101	M.G.RESISTOR	100	1/16W
R198	NRSA63J-101	M.G.RESISTOR	100	1/16W
R199	NRSA63J-105	M.G.RESISTOR	1.0M	1/16W
R200	NRSA63J-101	M.G.RESISTOR	100	1/16W
R201	NRSA63J-153	M.G.RESISTOR	15K	1/16W
R202	NRSA63J-820	M.G.RESISTOR	82	1/16W
R203	NRVA63D-222	M.G.RESISTOR	2.2K	1/16W
R204	NRSA63J-330	M.G.RESISTOR	33	1/16W
R205	NRVA63D-202	M.G.RESISTOR	2K	1/16W
R206	NRSA63J-103	M.G.RESISTOR	10K	1/16W
R207	NRSA63J-124	M.G.RESISTOR	120K	1/16W
R208	NRSA63J-123	M.G.RESISTOR	12K	1/16W
R209	NRSA63J-391	M.G.RESISTOR	390	1/16W
R210	NRSA63J-103	M.G.RESISTOR	10K	1/16W
R211	NRSA63J-222	M.G.RESISTOR	2.2K	1/16W
R212	NRSA63J-222	M.G.RESISTOR	2.2K	1/16W
R213	NRSA63J-471	M.G.RESISTOR	470	1/16W
R214	NRSA63J-471	M.G.RESISTOR	470	1/16W
R215	NRSA63J-151	M.G.RESISTOR	150	1/16W
R216	NRSA63J-270	M.G.RESISTOR	27	1/16W
R217	NRSA63J-471	M.G.RESISTOR	470	1/16W
R218	NRSA63J-471	M.G.RESISTOR	470	1/16W
R219	NRSA63J-471	M.G.RESISTOR	470	1/16W
R220	NRSA63J-471	M.G.RESISTOR	470	1/16W
R221	NRSA63J-471	M.G.RESISTOR	470	1/16W
R222	NRSA63J-471	M.G.RESISTOR	470	1/16W
R223	NRSA63J-101	M.G.RESISTOR	100	1/16W
R224	NRSA63J-100	M.G.RESISTOR	10	1/16W
R225	NRSA63J-100	M.G.RESISTOR	10	1/16W
R226	NRSA63J-332	M.G.RESISTOR	3.3K	1/16W

Symbol No.	Part No.	Part Name	Description	
R227	NRSA63J-392	M.G.RESISTOR	3.9K	1/16W
R228	NRSA63J-392	M.G.RESISTOR	3.9K	1/16W
R229	NRSA63J-0R0	M.G.RESISTOR	0	1/16W
R230	NRSA63J-102	M.G.RESISTOR	1.0K	1/16W
R231	NRSA63J-104	M.G.RESISTOR	100K	1/16W
R232	NRSA63J-103	M.G.RESISTOR	10K	1/16W
R233	NRSA63J-222	M.G.RESISTOR	2.2K	1/16W
R234	NRSA63J-223	M.G.RESISTOR	22K	1/16W
R235	NRSA63J-102	M.G.RESISTOR	1.0K	1/16W
R237	NRSA63J-123	M.G.RESISTOR	12K	1/16W
R238	NRSA63J-472	M.G.RESISTOR	4.7K	1/16W
R247	NRSA63J-101	M.G.RESISTOR	100	1/16W
R261	NRSA63J-101	M.G.RESISTOR	100	1/16W
R264	NRSA63J-0R0	M.G.RESISTOR	0	1/16W
R266	NRSA63J-0R0	M.G.RESISTOR	0	1/16W
R268	NRSA63J-102	M.G.RESISTOR	1.0K	1/16W
R269	NRSA63J-333	M.G.RESISTOR	33K	1/16W
R270	NRSA63J-101	M.G.RESISTOR	100	1/16W
R271	NRSA63J-332	M.G.RESISTOR	3.3K	1/16W
R272	NRSA63J-101	M.G.RESISTOR	100	1/16W
R273	NRSA63J-103	M.G.RESISTOR	10K	1/16W
R274	NRSA63J-103	M.G.RESISTOR	10K	1/16W
R275	NRSA63J-102	M.G.RESISTOR	1.0K	1/16W
R276	NRSA63J-105	M.G.RESISTOR	1.0M	1/16W
R277	NRSA63J-101	M.G.RESISTOR	100	1/16W
R278	NRSA63J-0R0	M.G.RESISTOR	0	1/16W
R279	NRSA63J-0R0	M.G.RESISTOR	0	1/16W
R280	NRSA63J-105	M.G.RESISTOR	1.0M	1/16W
R281	NRSA63J-0R0	M.G.RESISTOR	0	1/16W
R282	NRSA63J-473	M.G.RESISTOR	47K	1/16W
R283	NRSA63J-473	M.G.RESISTOR	47K	1/16W
R284	NRSA63J-103	M.G.RESISTOR	10K	1/16W
R285	NRSA63J-103	M.G.RESISTOR	10K	1/16W
R286	NRSA63J-103	M.G.RESISTOR	10K	1/16W
R287	NRSA63J-222	M.G.RESISTOR	2.2K	1/16W
R288	NRSA63J-103	M.G.RESISTOR	10K	1/16W
R289	NRSA63J-151	M.G.RESISTOR	150	1/16W
R290	NRSA63J-103	M.G.RESISTOR	10K	1/16W
R291	NRSA63J-223	M.G.RESISTOR	22K	1/16W
R292	NRSA63J-151	M.G.RESISTOR	150	1/16W
R293	NRSA63J-151	M.G.RESISTOR	150	1/16W
R294	NRSA63J-101	M.G.RESISTOR	100	1/16W
R302	NRSA63J-103	M.G.RESISTOR	10K	1/16W
R303	NRSA63J-0R0	M.G.RESISTOR	0	1/16W
R304	NRSA63J-470	M.G.RESISTOR	47	1/16W
R305	NRSA63J-101	M.G.RESISTOR	100	1/16W
R306	NRSA63J-101	M.G.RESISTOR	100	1/16W
R307	NRSA63J-224	M.G.RESISTOR	220K	1/16W
R308	NRSA63J-224	M.G.RESISTOR	220K	1/16W
R309	NRSA63J-102	M.G.RESISTOR	1.0K	1/16W
R310	NRSA63J-102	M.G.RESISTOR	1.0K	1/16W
R314	NRSA63J-102	M.G.RESISTOR	1.0K	1/16W
R411	NRSA63J-0R0	M.G.RESISTOR	0	1/16W
R412	NRSA63J-0R0	M.G.RESISTOR	0	1/16W
R424	NRSA63J-102	M.G.RESISTOR	1.0K	1/16W
R426	NRSA63J-102	M.G.RESISTOR	1.0K	1/16W
R427	NRSA63J-0R0	M.G.RESISTOR	0	1/16W
R428	NRSA63J-272	M.G.RESISTOR	2.7K	1/16W
R510	NRSA63J-561	M.G.RESISTOR	560	1/16W

Symbol No.	Part No.	Part Name	Description	
R511	NRSA63J-182	M.G.RESISTOR	1.8K	1/16W
R512	NRSA63J-473	M.G.RESISTOR	47K	1/16W
R513	NRSA63J-473	M.G.RESISTOR	47K	1/16W
R514	NRSA63J-0R0	M.G.RESISTOR	0	1/16W
R515	NRSA63J-104	M.G.RESISTOR	100K	1/16W
R516	NRSA63J-0R0	M.G.RESISTOR	0	1/16W
R517	NRSA63J-0R0	M.G.RESISTOR	0	1/16W
R518	NRSA63J-222	M.G.RESISTOR	2.2K	1/16W
VR1	NVP1416-101	TRIM.RESISTOR	CH BAL	
VR2	NVP1416-501	TRIM.RESISTOR	FIL LEV	
VR3	NVP1416-202	TRIM.RESISTOR	FREQ	
VR4	NVP1416-202	TRIM.RESISTOR	FREQ	
VR6	NVP1415-101	TRIM.RESISTOR	1+D	
VR7	NVP1416-102	TRIM.RESISTOR	ERR RATE	
VR8	NVP1416-102	TRIM.RESISTOR	ERR RATE	
VR9	NVP1415-102	TRIM.RESISTOR	SL LEV	
VR10	NVP1416-201	TRIM.RESISTOR	PLL	
VR11	NVP1415-101	TRIM.RESISTOR	ERR RATE	
C1	NCF31CZ-104	CER.CAPACITOR	0.10	16V
C2	NCF31CZ-104	CER.CAPACITOR	0.10	16V
C3	NEH91CM-226	E.CAPACITOR	22	16V
C4	NCB31HK-103	CER.CAPACITOR	0.010	50V
C5	NCB31HK-103	CER.CAPACITOR	0.010	50V
C6	NCF31CZ-104	CER.CAPACITOR	0.10	16V
C7	NCF31CZ-104	CER.CAPACITOR	0.10	16V
C8	NCB31HK-103	CER.CAPACITOR	0.010	50V
C9	NCB31HK-103	CER.CAPACITOR	0.010	50V
C10	NCB31HK-103	CER.CAPACITOR	0.010	50V
C11	NEH91CM-106	E.CAPACITOR	10	16V
C12	NCT06CH-100	CER.CAPACITOR	10P	50V
C13	NCF31CZ-104	CER.CAPACITOR	0.10	16V
C14	NCB31HK-103	CER.CAPACITOR	0.010	50V
C15	NCF31CZ-104	CER.CAPACITOR	0.10	16V
C16	NCF31CZ-104	CER.CAPACITOR	0.10	16V
C17	NCF31CZ-104	CER.CAPACITOR	0.10	16V
C18	NCT06CH-560	CER.CAPACITOR	56P	50V
C19	NCF31CZ-104	CER.CAPACITOR	0.10	16V
C20	NCB31HK-103	CER.CAPACITOR	0.010	50V
C21	NCB31HK-103	CER.CAPACITOR	0.010	50V
C22	NEH91CM-226	E.CAPACITOR	22	16V
C23	NCF31CZ-104	CER.CAPACITOR	0.10	16V
C24	NCB31HK-222	CER.CAPACITOR	2200P	50V
C25	NCF31CZ-104	CER.CAPACITOR	0.10	16V
C26	NCB31HK-103	CER.CAPACITOR	0.010	50V
C27	NCB31HK-103	CER.CAPACITOR	0.010	50V
C28	NCF31CZ-104	CER.CAPACITOR	0.10	16V
C29	NCB31HK-103	CER.CAPACITOR	0.010	50V
C30	NCB31HK-103	CER.CAPACITOR	0.010	50V
C31	NEH91CM-226	E.CAPACITOR	22	16V
C32	NCF31CZ-104	CER.CAPACITOR	0.10	16V
C33	NCB31HK-103	CER.CAPACITOR	0.010	50V
C34	NCB31HK-103	CER.CAPACITOR	0.010	50V
C35	NEH91CM-226	E.CAPACITOR	22	16V
C38	NCF31CZ-104	CER.CAPACITOR	0.10	16V
C39	NCF31CZ-104	CER.CAPACITOR	0.10	16V
C40	NCF31CZ-104	CER.CAPACITOR	0.10	16V
C41	NCF31CZ-104	CER.CAPACITOR	0.10	16V

[RF PROCESS2]

Symbol No.	Part No.	Part Name	Description	
C42	NCB31HK-102	CER.CAPACITOR	1000P	50V
C43	NCB31HK-103	CER.CAPACITOR	0.010	50V
C44	NCB31HK-103	CER.CAPACITOR	0.010	50V
C45	NEH91CM-226	E.CAPACITOR	22	16V
C46	NCB31HK-103	CER.CAPACITOR	0.010	50V
C47	NEH91CM-226	E.CAPACITOR	22	16V
C48	NCB31HK-103	CER.CAPACITOR	0.010	50V
C49	NCB31HK-103	CER.CAPACITOR	0.010	50V
C50	NEH91CM-106	E.CAPACITOR	10	16V
C51	NCT06CH-101	CER.CAPACITOR	100P	50V
C52	NCB31HK-102	CER.CAPACITOR	1000P	50V
C53	NCT06CH-101	CER.CAPACITOR	100P	50V
C54	NCB31HK-103	CER.CAPACITOR	0.010	50V
C55	NCB31HK-102	CER.CAPACITOR	1000P	50V
C56	NCF31CZ-104	CER.CAPACITOR	0.10	16V
C57	NCT06CH-561	CER.CAPACITOR	560P	50V
C58	NCB31HK-103	CER.CAPACITOR	0.010	50V
C59	NEH91HM-105	E.CAPACITOR	1.0	50V
C60	NCB31HK-103	CER.CAPACITOR	0.010	50V
C61	NCB31HK-103	CER.CAPACITOR	0.010	50V
C62	NCB31HK-103	CER.CAPACITOR	0.010	50V
C63	NCB31HK-102	CER.CAPACITOR	1000P	50V
C64	NCF31CZ-104	CER.CAPACITOR	0.10	16V
C65	NCF31CZ-104	CER.CAPACITOR	0.10	16V
C66	NCF31CZ-104	CER.CAPACITOR	0.10	16V
C67	NEH91CM-226	E.CAPACITOR	22	16V
C68	NCB31HK-103	CER.CAPACITOR	0.010	50V
C69	NEH91CM-226	E.CAPACITOR	22	16V
C70	NCB31HK-103	CER.CAPACITOR	0.010	50V
C71	NEH91CM-226	E.CAPACITOR	22	16V
C72	NCB31HK-103	CER.CAPACITOR	0.010	50V
C73	NCB31HK-103	CER.CAPACITOR	0.010	50V
C74	NEH91CM-226	E.CAPACITOR	22	16V
C75	NCB31HK-103	CER.CAPACITOR	0.010	50V
C78	NCB31HK-103	CER.CAPACITOR	0.010	50V
C79	NEH91CM-106	E.CAPACITOR	10	16V
C80	NEH91CM-226	E.CAPACITOR	22	16V
C81	NCB31HK-103	CER.CAPACITOR	0.010	50V
C82	NCB31HK-103	CER.CAPACITOR	0.010	50V
C83	NEH91CM-106	E.CAPACITOR	10	16V
C84	NEH91CM-226	E.CAPACITOR	22	16V
C85	NCB31HK-103	CER.CAPACITOR	0.010	50V
C86	NCB31HK-103	CER.CAPACITOR	0.010	50V
C87	NCB31HK-103	CER.CAPACITOR	0.010	50V
C88	NCB31HK-103	CER.CAPACITOR	0.010	50V
C89	NCB31HK-103	CER.CAPACITOR	0.010	50V
C90	NCB31HK-103	CER.CAPACITOR	0.010	50V
C91	NCB31HK-103	CER.CAPACITOR	0.010	50V
C92	NCT06CH-100	CER.CAPACITOR	10P	50V
C93	NCB31HK-103	CER.CAPACITOR	0.010	50V
C94	NCB31HK-103	CER.CAPACITOR	0.010	50V
C95	NEH91CM-226	E.CAPACITOR	22	16V
C96	NCB31HK-103	CER.CAPACITOR	0.010	50V
C97	NCB31HK-103	CER.CAPACITOR	0.010	50V
C98	NEH91CM-226	E.CAPACITOR	22	16V
C99	NCB31HK-103	CER.CAPACITOR	0.010	50V
C100	NEH91CM-106	E.CAPACITOR	10	16V
C101	NEH91CM-226	E.CAPACITOR	22	16V
C102	NCB31HK-103	CER.CAPACITOR	0.010	50V

Symbol No.	Part No.	Part Name	Description	
C103	NCB31HK-103	CER.CAPACITOR	0.010	50V
C104	NCF31CZ-104	CER.CAPACITOR	0.10	16V
C105	NCT06CH-100	CER.CAPACITOR	10P	50V
C106	NCT06CH-100	CER.CAPACITOR	10P	50V
C107	NCB31HK-103	CER.CAPACITOR	0.010	50V
C108	NEH91CM-226	E.CAPACITOR	22	16V
C109	NCT06CH-101	CER.CAPACITOR	100P	50V
C110	NEH90JM-107	E.CAPACITOR	100	6.3V
C111	NEH90JM-107	E.CAPACITOR	100	6.3V
C112	NCF31CZ-104	CER.CAPACITOR	0.10	16V
C113	NCB31HK-103	CER.CAPACITOR	0.010	50V
C114	NCB31HK-103	CER.CAPACITOR	0.010	50V
C115	NCF31CZ-104	CER.CAPACITOR	0.10	16V
C116	NCF31CZ-104	CER.CAPACITOR	0.10	16V
C117	NCB31HK-103	CER.CAPACITOR	0.010	50V
C118	NCB31HK-103	CER.CAPACITOR	0.010	50V
C119	NCF31CZ-104	CER.CAPACITOR	0.10	16V
C120	NCB31HK-103	CER.CAPACITOR	0.010	50V
C121	NEH91CM-226	E.CAPACITOR	22	16V
C122	NCB31HK-103	CER.CAPACITOR	0.010	50V
C123	NEH91CM-226	E.CAPACITOR	22	16V
C124	NCB31HK-103	CER.CAPACITOR	0.010	50V
C130	NEH91CM-106	E.CAPACITOR	10	16V
C139	NCB31HK-103	CER.CAPACITOR	0.010	50V
C140	NEH91CM-226	E.CAPACITOR	22	16V
C145	NCB31HK-103	CER.CAPACITOR	0.010	50V
C148	NCB31HK-103	CER.CAPACITOR	0.010	50V
C149	NCB31HK-103	CER.CAPACITOR	0.010	50V
C150	NEH90JM-107	E.CAPACITOR	100	6.3V
C151	NEH90JM-107	E.CAPACITOR	100	6.3V
C152	NEH91HM-105	E.CAPACITOR	1.0	50V
C153	NEF11EM-474	TAN.CAPACITOR	0.47	25V
C154	NCB31HK-103	CER.CAPACITOR	0.010	50V
C155	NCB31HK-103	CER.CAPACITOR	0.010	50V
C156	NCB31HK-103	CER.CAPACITOR	0.010	50V
C157	NCB31HK-103	CER.CAPACITOR	0.010	50V
C158	NCT06CH-330	CER.CAPACITOR	33P	50V
C159	NCF31CZ-104	CER.CAPACITOR	0.10	16V
C160	NCF31CZ-104	CER.CAPACITOR	0.10	16V
C161	NCB31HK-103	CER.CAPACITOR	0.010	50V
C162	NCB31HK-103	CER.CAPACITOR	0.010	50V
C164	NCB31HK-103	CER.CAPACITOR	0.010	50V
C165	NCB31HK-103	CER.CAPACITOR	0.010	50V
C169	NCT06CH-101	CER.CAPACITOR	100P	50V
C170	NCT06CH-101	CER.CAPACITOR	100P	50V
C171	NEH91EM-475	E.CAPACITOR	4.7	25V
C179	NCB31HK-103	CER.CAPACITOR	0.010	50V
C201	NCB31HK-103	CER.CAPACITOR	0.010	50V
C202	NCB31HK-103	CER.CAPACITOR	0.010	50V
C203	NCB31HK-103	CER.CAPACITOR	0.010	50V
C204	NCB31HK-103	CER.CAPACITOR	0.010	50V
C205	NCF31CZ-104	CER.CAPACITOR	0.10	16V
C206	NCF31CZ-104	CER.CAPACITOR	0.10	16V
C225	NCF31CZ-104	CER.CAPACITOR	0.10	16V
C227	NCB31HK-103	CER.CAPACITOR	0.010	50V
C230	NCB31HK-102	CER.CAPACITOR	1000P	50V
C250	NCT06CH-221	CER.CAPACITOR	220P	50V
C256	NCB31HK-103	CER.CAPACITOR	0.010	50V

Symbol No.	Part No.	Part Name	Description
VC1	NAT3112-200	TRIM.CAPACITOR	20P 1+D
L1	PU58201-100	COIL	10μ
L2	PU58201-1R0	COIL	1μ
L3	PU58201-R47	COIL	0.47μ
CN1	PGZ02149-102	CONNECTOR	2PIN
CN2	PGZ02142-100	CONNECTOR	100PIN
TP1	SCV1880-001	TEST POINT	
TP2	SCV1880-001	TEST POINT	
TP3	SCV1880-001	TEST POINT	
TP4	SCV1880-001	TEST POINT	
TP5	SCV1880-001	TEST POINT	
TP6	SCV1880-001	TEST POINT	
TP7	SCV1880-001	TEST POINT	
TP8	SCV1880-001	TEST POINT	
TP9	SCV1880-001	TEST POINT	
TP10	SCV1880-001	TEST POINT	
TP11	SCV1880-001	TEST POINT	
TP12	SCV1880-001	TEST POINT	
TP13	SCV1880-001	TEST POINT	
TP14	SCV1880-001	TEST POINT	
TP15	SCV1880-001	TEST POINT	
TP16	SCV1880-001	TEST POINT	
TP17	SCV1880-001	TEST POINT	
TP18	SCV1880-001	TEST POINT	
TP19	SCV1880-001	TEST POINT	
TP20	SSV1096-001	TEST POINT	
TP21	SSV1096-001	TEST POINT	
TP22	SCV1880-001	TEST POINT	
TP23	SCV1880-001	TEST POINT	
TP24	SCV1880-001	TEST POINT	
TP25	SSV1096-001	TEST POINT	
TP26	SCV1880-001	TEST POINT	
TP27	SSV1096-001	TEST POINT	
TP28	SCV1880-001	TEST POINT	
TP29	SCV1880-001	TEST POINT	
TP30	SCV1880-001	TEST POINT	
TP38	SCV1880-001	TEST POINT	
TP39	SCV1880-001	TEST POINT	
TP40	SCV1880-001	TEST POINT	
TP41	SCV1880-001	TEST POINT	
TP42	SCV1880-001	TEST POINT	
TP43	SSV1096-001	TEST POINT	
TP44	SSV1096-001	TEST POINT	
TP45	SCV1880-001	TEST POINT	
TP46	SCV1880-001	TEST POINT	
TP49	SCV1880-001	TEST POINT	
TP50	SSV1096-001	TEST POINT	
TP52	SCV1880-001	TEST POINT	
TP53	SCV1880-001	TEST POINT	
FL1	PGZ02179	DELAY LINE	
FL2	PGZ02180	DELAY LINE	
FL3	PGZ02199	LPF	

Symbol No.	Part No.	Part Name	Description
K1	PGZ00627	FERRATE BEADS	
K2	PGZ00627	FERRATE BEADS	
K3	PGZ00627	FERRATE BEADS	
K4	PGZ00627	FERRATE BEADS	
K5	PGZ00627	FERRATE BEADS	
K8	PGZ00627	FERRATE BEADS	
K9	PGZ00627	FERRATE BEADS	
K10	PGZ00627	FERRATE BEADS	
K11	PGZ00627	FERRATE BEADS	
K12	PGZ00627	FERRATE BEADS	
K13	PGZ00627	FERRATE BEADS	
K14	PGZ00627	FERRATE BEADS	
K15	PGZ00627	FERRATE BEADS	
K16	PGZ00627	FERRATE BEADS	
K17	PGZ00627	FERRATE BEADS	
K18	PGZ00627	FERRATE BEADS	
K19	PGZ00627	FERRATE BEADS	
K20	PGZ00627	FERRATE BEADS	
K21	PGZ00627	FERRATE BEADS	
K22	PGZ00627	FERRATE BEADS	
K23	PGZ00627	FERRATE BEADS	
K24	PGZ00627	FERRATE BEADS	
K25	PGZ00627	FERRATE BEADS	
K32	PGZ00627	FERRATE BEADS	
T1	PGZ02198-02	COIL	
TB1	PGZ02228	EARTH LUG	
TB2	PGZ02228	EARTH LUG	
TB3	PGZ02228	EARTH LUG	
TB4	PGZ02228	EARTH LUG	
SL1	PRD20531	SHIELD CASE	
SC1	DPSP2606Z	SCREW	M2.6×6
SP1	PGZ01128-02	SPACER	

6.10 OUT ENC BOARD ASSEMBLY LIST [1][9]

SLK1028-A2A [1][9]□□□□□□

Symbol No.	Part No.	Part Name	Description
IC1	LM6361M	I.C.(M)	TEXAS
IC2	UPC78L05T	I.C.(M)	NEC
IC3	NJM79L05UA	I.C.(M)	JRC
IC7	MC14577CF	I.C.(M)	MOTOROLA
IC8	TK16031MTL	I.C.(M)	TOKO DENSI
IC9	TK16031MTL	I.C.(M)	TOKO DENSI
IC10	MM1111XF	I.C.(M)	MITUMI
IC11	UPC78L05T	I.C.(M)	NEC
IC12	UPC78L12T	I.C.(M)	NEC
IC13	NJM79L05UA	I.C.(M)	JRC
IC14	MC14577CF	I.C.(M)	MOTOROLA
IC15	TK16031MTL	I.C.(M)	TOKO DENSI
IC16	TK16031MTL	I.C.(M)	TOKO DENSI
IC17	MM1111XF	I.C.(M)	MITUMI
IC18	UPC78L05T	I.C.(M)	NEC
IC19	NJM79L05UA	I.C.(M)	JRC
IC20	TK16031MTL	I.C.(M)	TOKO DENSI
IC21	MC14577CF	I.C.(M)	MOTOROLA
IC22	TC4W53F	I.C.(M)	TOSHIBA
IC23	UPC4082G2	I.C.(M)	NEC
IC24	UPC78L12T	I.C.(M)	NEC
IC25	UPC78L05T	I.C.(M)	NEC
IC26	NJM79L05UA	I.C.(M)	JRC
IC27	TK16031MTL	I.C.(M)	TOKO DENSI
IC28	MC14577CF	I.C.(M)	MOTOROLA
IC29	TC4W53F	I.C.(M)	TOSHIBA
IC30	UPC4082G2	I.C.(M)	NEC
IC31	UPC78L05T	I.C.(M)	NEC
IC32	NJM79L05UA	I.C.(M)	JRC
IC301	NJM1496M	I.C.(M)	JRC
IC302	NJM1496M	I.C.(M)	JRC
IC303	UPC78L12T	I.C.(M)	NEC
IC304	NJM79L05UA	I.C.(M)	JRC
IC307	MC14577CF	I.C.(M)	MOTOROLA
IC308	UPC78L05T	I.C.(M)	NEC
IC309	NJM79L05UA	I.C.(M)	JRC
IC310	UPC4082G2	I.C.(M)	NEC
IC311	TC4W53F	I.C.(M)	TOSHIBA
IC312	UPC358G2	I.C.(M)	NEC
IC313	UPC78L12T	I.C.(M)	NEC
IC314	TC7SU04F	I.C.(M)	TOSHIBA
IC315	TC74VHC163F	I.C.(M)	TOSHIBA
IC316	TC74VHC164F	I.C.(M)	TOSHIBA
IC317	UPC78L05T	I.C.(M)	NEC
IC319	MC10H107M	I.C.(M)	MOTOROLA
IC320	UPC78L05T	I.C.(M)	NEC
IC321	TC74VHC86F	I.C.(M)	TOSHIBA
IC322	UPC358G2	I.C.(M)	NEC
IC323	TC7SU04F	I.C.(M)	TOSHIBA
IC324	TC74VHC163F	I.C.(M)	TOSHIBA
IC325	TC74VHC164F	I.C.(M)	TOSHIBA
IC326	UPC78L05T	I.C.(M)	NEC
IC330	TC74VHC541F	I.C.(M)	TOSHIBA
IC331	TC7W04F	I.C.(M)	TOSHIBA
IC332	TC74VHC123AF	I.C.(M)	TOSHIBA
IC333	UPC78L05T	I.C.(M)	NEC
IC334	NJM1496M	I.C.(M)	JRC
IC335	UPC78L12T	I.C.(M)	NEC
IC336	NJM79L05UA	I.C.(M)	JRC

Symbol No.	Part No.	Part Name	Description
Q1	2SA1576(QRS)	TRANSISTOR	ROHM
Q2	2SA1576(QRS)	TRANSISTOR	ROHM
Q3	2SC4081(QR)	TRANSISTOR	ROHM
Q4	2SC4081(QR)	TRANSISTOR	ROHM
Q9	2SA1576(QRS)	TRANSISTOR	ROHM
Q10	2SA1576(QRS)	TRANSISTOR	ROHM
Q11	2SC4081(QR)	TRANSISTOR	ROHM
Q12	2SC4081(QR)	TRANSISTOR	ROHM
Q13	2SA1576(QRS)	TRANSISTOR	ROHM
Q14	2SA1576(QRS)	TRANSISTOR	ROHM
Q15	2SC4081(QR)	TRANSISTOR	ROHM
Q16	2SC4081(QR)	TRANSISTOR	ROHM
Q17	2SA1576(QRS)	TRANSISTOR	ROHM
Q18	2SC4081(QR)	TRANSISTOR	ROHM
Q19	2SC4081(QR)	TRANSISTOR	ROHM
Q20	2SA1576(QRS)	TRANSISTOR	ROHM
Q21	2SA1576(QRS)	TRANSISTOR	ROHM
Q22	2SA1576(QRS)	TRANSISTOR	ROHM
Q23	2SC4081(QR)	TRANSISTOR	ROHM
Q24	2SC4081(QR)	TRANSISTOR	ROHM
Q25	2SA1576(QRS)	TRANSISTOR	ROHM
Q26	2SA1576(QRS)	TRANSISTOR	ROHM
Q39	2SK665	F.E.T.	MATSUSHITA
Q40	2SK665	F.E.T.	MATSUSHITA
Q301	2SC4081(QR)	TRANSISTOR	ROHM
Q302	2SC4081(QR)	TRANSISTOR	ROHM
Q303	2SC4081(QR)	TRANSISTOR	ROHM
Q305	2SK665	F.E.T.	MATSUSHITA
Q306	2SC4081(QR)	TRANSISTOR	ROHM
Q307	2SA1577(QR)	TRANSISTOR	ROHM
Q308	2SK665	F.E.T.	MATSUSHITA
Q311	2SC4081(QR)	TRANSISTOR	ROHM
Q312	2SA1577(QR)	TRANSISTOR	ROHM
Q313	2SK665	F.E.T.	MATSUSHITA
Q316	2SK665	F.E.T.	MATSUSHITA
Q317	2SC4081(QR)	TRANSISTOR	ROHM
Q318	2SC4081(QR)	TRANSISTOR	ROHM
Q320	2SC4081(QR)	TRANSISTOR	ROHM
Q321	2SA1576(QRS)	TRANSISTOR	ROHM
D301	IMN10	D.ARRAY	ROHM
D302	IMN10	D.ARRAY	ROHM
R1	NRSA63J-103	M.G.RESISTOR	10K 1/16W
R2	NRSA63J-101	M.G.RESISTOR	100 1/16W
R3	NRSA63J-101	M.G.RESISTOR	100 1/16W
R4	NRSA63J-182	M.G.RESISTOR	1.8K 1/16W
R5	NRSA63J-122	M.G.RESISTOR	1.2K 1/16W
R6	NRSA63J-101	M.G.RESISTOR	100 1/16W
R7	NRSA63J-122	M.G.RESISTOR	1.2K 1/16W
R8	NRVA63D-391	M.F.RESISTOR	390 1/16W
R9	NRVA63D-391	M.F.RESISTOR	390 1/16W
R10	NRSA63J-102	M.G.RESISTOR	1.0K 1/16W
R11	NRSA63J-182	M.G.RESISTOR	1.8K 1/16W
R12	NRSA63J-101	M.G.RESISTOR	100 1/16W
R13	NRSA63J-102	M.G.RESISTOR	1.0K 1/16W
R14	NRSA63J-101	M.G.RESISTOR	100 1/16W
R29	NRSA63J-103	M.G.RESISTOR	10K 1/16W
R30	NRSA63J-101	M.G.RESISTOR	100 1/16W

Symbol No.	Part No.	Part Name	Description	
R31	NRSA63J-101	M.G.RESISTOR	100	1/16W
R32	NRSA63J-182	M.G.RESISTOR	1.8K	1/16W
R33	NRSA63J-182	M.G.RESISTOR	1.8K	1/16W
R34	NRSA63J-101	M.G.RESISTOR	100	1/16W
R35	NRSA63J-122	M.G.RESISTOR	1.2K	1/16W
R36	NRVA63D-102	M.F.RESISTOR	1.0K	1/16W
R37	NRVA63D-102	M.F.RESISTOR	1.0K	1/16W
R38	NRSA63J-122	M.G.RESISTOR	1.2K	1/16W
R39	NRSA63J-471	M.G.RESISTOR	470	1/16W
R40	NRSA63J-101	M.G.RESISTOR	100	1/16W
R41	NRSA63J-103	M.G.RESISTOR	10K	1/16W
R42	NRSA63J-821	M.G.RESISTOR	820	1/16W
R43	NRSA63J-471	M.G.RESISTOR	470	1/16W
R44	NRSA63J-103	M.G.RESISTOR	10K	1/16W
R45	NRSA63J-153	M.G.RESISTOR	15K	1/16W
R46	NRSA63J-183	M.G.RESISTOR	18K	1/16W
R47	NRSA63J-102	M.G.RESISTOR	1.0K	1/16W
R48	NRSA63J-183	M.G.RESISTOR	18K	1/16W
R49	NRSA63J-102	M.G.RESISTOR	1.0K	1/16W
R50	NRSA63J-101	M.G.RESISTOR	100	1/16W
R51	NRSA63J-222	M.G.RESISTOR	2.2K	1/16W
R52	NRSA63J-152	M.G.RESISTOR	1.5K	1/16W
R54	NRSA63F-806	M.G.RESISTOR	80M	1/16W
R55	NRSA63F-182	M.G.RESISTOR	1.8K	1/16W
R56	NRSA63J-103	M.G.RESISTOR	10K	1/16W
R57	NRSA63J-101	M.G.RESISTOR	100	1/16W
R58	NRSA63J-101	M.G.RESISTOR	100	1/16W
R59	NRSA63J-182	M.G.RESISTOR	1.8K	1/16W
R60	NRSA63J-182	M.G.RESISTOR	1.8K	1/16W
R61	NRSA63J-101	M.G.RESISTOR	100	1/16W
R62	NRSA63J-122	M.G.RESISTOR	1.2K	1/16W
R63	NRVA63D-102	M.F.RESISTOR	1.0K	1/16W
R64	NRVA63D-102	M.F.RESISTOR	1.0K	1/16W
R65	NRSA63J-122	M.G.RESISTOR	1.2K	1/16W
R66	NRSA63J-471	M.G.RESISTOR	470	1/16W
R67	NRSA63J-101	M.G.RESISTOR	100	1/16W
R68	NRSA63J-103	M.G.RESISTOR	10K	1/16W
R69	NRSA63J-821	M.G.RESISTOR	820	1/16W
R70	NRSA63J-471	M.G.RESISTOR	470	1/16W
R71	NRSA63J-103	M.G.RESISTOR	10K	1/16W
R72	NRSA63J-153	M.G.RESISTOR	15K	1/16W
R73	NRSA63J-183	M.G.RESISTOR	18K	1/16W
R74	NRSA63J-102	M.G.RESISTOR	1.0K	1/16W
R75	NRSA63J-183	M.G.RESISTOR	18K	1/16W
R76	NRSA63J-102	M.G.RESISTOR	1.0K	1/16W
R77	NRSA63J-101	M.G.RESISTOR	100	1/16W
R78	NRSA63J-222	M.G.RESISTOR	2.2K	1/16W
R79	NRSA63J-152	M.G.RESISTOR	1.5K	1/16W
R81	NRSA63F-806	M.G.RESISTOR	80M	1/16W
R82	NRSA63F-182	M.G.RESISTOR	1.8K	1/16W
R83	NRSA63J-103	M.G.RESISTOR	10K	1/16W
R84	NRSA63J-101	M.G.RESISTOR	100	1/16W
R85	NRSA63J-101	M.G.RESISTOR	100	1/16W
R86	NRSA63J-182	M.G.RESISTOR	1.8K	1/16W
R87	NRSA63J-122	M.G.RESISTOR	1.2K	1/16W
R88	NRVA63D-102	M.F.RESISTOR	1.0K	1/16W
R89	NRVA63D-102	M.F.RESISTOR	1.0K	1/16W
R90	NRSA63J-101	M.G.RESISTOR	100	1/16W
R91	NRSA63J-102	M.G.RESISTOR	1.0K	1/16W

Symbol No.	Part No.	Part Name	Description	
R92	NRSA63J-103	M.G.RESISTOR	10K	1/16W
R93	NRSA63J-153	M.G.RESISTOR	15K	1/16W
R94	NRSA63J-183	M.G.RESISTOR	18K	1/16W
R95	NRSA63J-102	M.G.RESISTOR	1.0K	1/16W
R96	NRSA63J-101	M.G.RESISTOR	100	1/16W
R97	NRSA63J-222	M.G.RESISTOR	2.2K	1/16W
R98	NRSA63J-102	M.G.RESISTOR	1.0K	1/16W
R99	NRSA63J-103	M.G.RESISTOR	10K	1/16W
R101	NRSA63J-152	M.G.RESISTOR	1.5K	1/16W
R102	NRSA63J-471	M.G.RESISTOR	470	1/16W
R103	NRSA63J-561	M.G.RESISTOR	560	1/16W
R104	NRSA63J-102	M.G.RESISTOR	1.0K	1/16W
R105	NRSA63J-151	M.G.RESISTOR	150	1/16W
R106	NRSA63J-102	M.G.RESISTOR	1.0K	1/16W
R107	NRSA63J-102	M.G.RESISTOR	1.0K	1/16W
R108	NRSA63J-102	M.G.RESISTOR	1.0K	1/16W
R109	NRSA63J-102	M.G.RESISTOR	1.0K	1/16W
R110	NRSA63J-561	M.G.RESISTOR	560	1/16W
R111	NRSA63J-273	M.G.RESISTOR	27K	1/16W
R112	NRSA63J-272	M.G.RESISTOR	2.7K	1/16W
R113	NRSA63J-103	M.G.RESISTOR	10K	1/16W
R114	NRSA63J-101	M.G.RESISTOR	100	1/16W
R115	NRSA63J-101	M.G.RESISTOR	100	1/16W
R116	NRSA63J-182	M.G.RESISTOR	1.8K	1/16W
R117	NRSA63J-122	M.G.RESISTOR	1.2K	1/16W
R118	NRVA63D-102	M.F.RESISTOR	1.0K	1/16W
R119	NRVA63D-102	M.F.RESISTOR	1.0K	1/16W
R120	NRSA63J-101	M.G.RESISTOR	100	1/16W
R121	NRSA63J-102	M.G.RESISTOR	1.0K	1/16W
R122	NRSA63J-103	M.G.RESISTOR	10K	1/16W
R123	NRSA63J-153	M.G.RESISTOR	15K	1/16W
R124	NRSA63J-183	M.G.RESISTOR	18K	1/16W
R125	NRSA63J-102	M.G.RESISTOR	1.0K	1/16W
R126	NRSA63J-101	M.G.RESISTOR	100	1/16W
R129	NRSA63J-103	M.G.RESISTOR	10K	1/16W
R131	NRSA63J-152	M.G.RESISTOR	1.5K	1/16W
R132	NRSA63J-471	M.G.RESISTOR	470	1/16W
R133	NRSA63J-561	M.G.RESISTOR	560	1/16W
R134	NRSA63J-102	M.G.RESISTOR	1.0K	1/16W
R135	NRSA63J-221	M.G.RESISTOR	220	1/16W
R136	NRSA63J-102	M.G.RESISTOR	1.0K	1/16W
R137	NRSA63J-102	M.G.RESISTOR	1.0K	1/16W
R138	NRSA63J-102	M.G.RESISTOR	1.0K	1/16W
R139	NRSA63J-102	M.G.RESISTOR	1.0K	1/16W
R140	NRSA63J-561	M.G.RESISTOR	560	1/16W
R141	NRSA63J-273	M.G.RESISTOR	27K	1/16W
R142	NRSA63J-272	M.G.RESISTOR	2.7K	1/16W
R143	NRVA63D-152	M.F.RESISTOR	1.5K	1/16W
R144	NRVA63D-182	M.F.RESISTOR	1.8K	1/16W
R147	NRVA63D-682	M.F.RESISTOR	6.8K	1/16W
R148	NRVA63D-432	M.F.RESISTOR	4.3K	1/16W
R149	NRVA63D-682	M.F.RESISTOR	6.8K	1/16W
R150	NRVA63D-432	M.F.RESISTOR	4.3K	1/16W
R151	NRVA63D-682	M.F.RESISTOR	6.8K	1/16W
R152	NRVA63D-432	M.F.RESISTOR	4.3K	1/16W
R153	NRVA63D-682	M.F.RESISTOR	6.8K	1/16W
R154	NRVA63D-432	M.F.RESISTOR	4.3K	1/16W
R158	NRSA63J-0R0	M.G.RESISTOR	0	1/16W
R169	NRSA63J-0R0	M.G.RESISTOR	0	1/16W

[OUT ENC]

Symbol No.	Part No.	Part Name	Description	
R175	NRSA63J-0R0	M.G.RESISTOR	0	1/16W
R181	NRSA63J-0R0	M.G.RESISTOR	0	1/16W
R188	NRSA63J-0R0	M.G.RESISTOR	0	1/16W
R193	NRSA63J-331	M.G.RESISTOR	330	1/16W
R195	NRSA63J-101	M.G.RESISTOR	100	1/16W
R196	NRSA63J-101	M.G.RESISTOR	100	1/16W
R197	NRSA63J-331	M.G.RESISTOR	330	1/16W
R198	NRSA63J-331	M.G.RESISTOR	330	1/16W
R199	NRSA63J-0R0	M.G.RESISTOR	0	1/16W
R200	NRSA63J-103	M.G.RESISTOR	10K	1/16W
R201	NRSA63J-103	M.G.RESISTOR	10K	1/16W
R202	NRSA63J-273	M.G.RESISTOR	27K	1/16W
R203	NRSA63J-273	M.G.RESISTOR	27K	1/16W
R204	NRSA63J-223	M.G.RESISTOR	22K	1/16W
R206	NRSA63J-223	M.G.RESISTOR	22K	1/16W
R207	NRSA63J-223	M.G.RESISTOR	22K	1/16W
R208	NRSA63J-223	M.G.RESISTOR	22K	1/16W
R209	NRSA63J-223	M.G.RESISTOR	22K	1/16W
R301	NRSA63J-102	M.G.RESISTOR	1.0K	1/16W
R302	NRSA63J-561	M.G.RESISTOR	560	1/16W
R303	NRSA63J-471	M.G.RESISTOR	470	1/16W
R304	NRSA63J-102	M.G.RESISTOR	1.0K	1/16W
R305	NRSA63J-472	M.G.RESISTOR	4.7K	1/16W
R306	NRSA63J-560	M.G.RESISTOR	56	1/16W
R307	NRSA63J-560	M.G.RESISTOR	56	1/16W
R308	NRSA63J-102	M.G.RESISTOR	1.0K	1/16W
R309	NRSA63J-102	M.G.RESISTOR	1.0K	1/16W
R310	NRSA63J-222	M.G.RESISTOR	2.2K	1/16W
R311	NRSA63J-102	M.G.RESISTOR	1.0K	1/16W
R312	NRSA63J-561	M.G.RESISTOR	560	1/16W
R313	NRSA63J-471	M.G.RESISTOR	470	1/16W
R314	NRSA63J-472	M.G.RESISTOR	4.7K	1/16W
R315	NRSA63J-560	M.G.RESISTOR	56	1/16W
R316	NRSA63J-560	M.G.RESISTOR	56	1/16W
R317	NRSA63J-102	M.G.RESISTOR	1.0K	1/16W
R318	NRSA63J-102	M.G.RESISTOR	1.0K	1/16W
R319	NRSA63J-222	M.G.RESISTOR	2.2K	1/16W
R320	NRSA63J-152	M.G.RESISTOR	1.5K	1/16W
R321	NRSA63J-471	M.G.RESISTOR	470	1/16W
R322	NRSA63J-471	M.G.RESISTOR	470	1/16W
R323	NRSA63J-681	M.G.RESISTOR	680	1/16W
R324	NRSA63J-152	M.G.RESISTOR	1.5K	1/16W
R325	NRSA63J-102	M.G.RESISTOR	1.0K	1/16W
R326	NRSA63J-272	M.G.RESISTOR	2.7K	1/16W
R327	NRSA63J-102	M.G.RESISTOR	1.0K	1/16W
R328	NRSA63J-102	M.G.RESISTOR	1.0K	1/16W
R330	NRSA63J-222	M.G.RESISTOR	2.2K	1/16W
R331	NRSA63J-102	M.G.RESISTOR	1.0K	1/16W
R338	NRSA63J-271	M.G.RESISTOR	270	1/16W
R340	NRSA63J-681	M.G.RESISTOR	680	1/16W
R341	NRSA63J-471	M.G.RESISTOR	470	1/16W
R342	NRSA63J-101	M.G.RESISTOR	100	1/16W
R343	NRSA63J-562	M.G.RESISTOR	5.6K	1/16W
R344	NRSA63J-102	M.G.RESISTOR	1.0K	1/16W
R345	NRSA63J-822	M.G.RESISTOR	8.2K	1/16W
R346	NRSA63J-102	M.G.RESISTOR	1.0K	1/16W
R347	NRSA63J-332	M.G.RESISTOR	3.3K	1/16W
R348	NRSA63J-102	M.G.RESISTOR	1.0K	1/16W
R349	NRSA63J-332	M.G.RESISTOR	3.3K	1/16W

Symbol No.	Part No.	Part Name	Description	
R350	NRSA63J-682	M.G.RESISTOR	6.8K	1/16W
R351	NRSA63J-332	M.G.RESISTOR	3.3K	1/16W
R352	NRSA63J-102	M.G.RESISTOR	1.0K	1/16W
R353	NRSA63J-102	M.G.RESISTOR	1.0K	1/16W
R354	NRSA63J-562	M.G.RESISTOR	5.6K	1/16W
R355	NRSA63J-122	M.G.RESISTOR	1.2K	1/16W
R356	NRSA63J-103	M.G.RESISTOR	10K	1/16W
R357	NRSA63J-0R0	M.G.RESISTOR	0	1/16W
R358	NRSA63J-333	M.G.RESISTOR	33K	1/16W
R359	NRSA63J-182	M.G.RESISTOR	1.8K	1/16W
R360	NRSA63J-681	M.G.RESISTOR	680	1/16W
R361	NRSA63J-105	M.G.RESISTOR	1.0M	1/16W
R362	NRSA63J-101	M.G.RESISTOR	100	1/16W
R363	NRSA63J-101	M.G.RESISTOR	100	1/16W
R364	NRSA63J-101	M.G.RESISTOR	100	1/16W
R367	NRSA63J-101	M.G.RESISTOR	100	1/16W
R368	NRSA63J-332	M.G.RESISTOR	3.3K	1/16W
R373	NRSA63J-0R0	M.G.RESISTOR	0	1/16W
R376	NRSA63J-101	M.G.RESISTOR	100	1/16W
R380	NRSA63J-0R0	M.G.RESISTOR	0	1/16W
R384	NRSA63J-101	M.G.RESISTOR	100	1/16W
R386	NRSA63J-122	M.G.RESISTOR	1.2K	1/16W
R387	NRSA63J-122	M.G.RESISTOR	1.2K	1/16W
R388	NRSA63J-0R0	M.G.RESISTOR	0	1/16W
R389	NRSA63J-122	M.G.RESISTOR	1.2K	1/16W
R390	NRSA63J-122	M.G.RESISTOR	1.2K	1/16W
R391	NRSA63J-101	M.G.RESISTOR	100	1/16W
R392	NRSA63J-101	M.G.RESISTOR	100	1/16W
R394	NRSA63J-101	M.G.RESISTOR	100	1/16W
R395	NRSA63J-101	M.G.RESISTOR	100	1/16W
R396	NRSA63J-332	M.G.RESISTOR	3.3K	1/16W
R398	NRSA63J-152	M.G.RESISTOR	1.5K	1/16W
R399	NRSA63J-183	M.G.RESISTOR	18K	1/16W
R400	NRSA63J-562	M.G.RESISTOR	5.6K	1/16W
R401	NRSA63J-391	M.G.RESISTOR	390	1/16W
R402	NRSA63J-103	M.G.RESISTOR	10K	1/16W
R403	NRSA63J-333	M.G.RESISTOR	33K	1/16W
R404	NRSA63J-333	M.G.RESISTOR	33K	1/16W
R405	NRSA63J-333	M.G.RESISTOR	33K	1/16W
R406	NRSA63J-105	M.G.RESISTOR	1.0M	1/16W
R407	NRSA63J-101	M.G.RESISTOR	100	1/16W
R408	NRSA63J-101	M.G.RESISTOR	100	1/16W
R409	NRSA63J-101	M.G.RESISTOR	100	1/16W
R410	NRSA63J-101	M.G.RESISTOR	100	1/16W
R412	NRSA63J-102	M.G.RESISTOR	1.0K	1/16W
R413	NRSA63J-101	M.G.RESISTOR	100	1/16W
R414	NRSA63J-332	M.G.RESISTOR	3.3K	1/16W
R437	NRSA63J-0R0	M.G.RESISTOR	0	1/16W
R438	NRSA63J-122	M.G.RESISTOR	1.2K	1/16W
R439	NRSA63J-0R0	M.G.RESISTOR	0	1/16W
R440	NRSA63J-122	M.G.RESISTOR	1.2K	1/16W
R441	NRSA63J-101	M.G.RESISTOR	100	1/16W
R442	NRSA63J-101	M.G.RESISTOR	100	1/16W
R443	NRSA63J-101	M.G.RESISTOR	100	1/16W
R444	NRSA63J-101	M.G.RESISTOR	100	1/16W
R445	NRSA63J-101	M.G.RESISTOR	100	1/16W
R446	NRSA63J-103	M.G.RESISTOR	10K	1/16W
R447	NRSA63J-103	M.G.RESISTOR	10K	1/16W
R448	NRSA63J-103	M.G.RESISTOR	10K	1/16W

Symbol No.	Part No.	Part Name	Description	
R449	NRSA63J-103	M.G.RESISTOR	10K	1/16W
R450	NRSA63J-103	M.G.RESISTOR	10K	1/16W
R451	NRSA63J-103	M.G.RESISTOR	10K	1/16W
R452	NRSA63J-103	M.G.RESISTOR	10K	1/16W
R453	NRSA63J-103	M.G.RESISTOR	10K	1/16W
R454	NRSA63J-103	M.G.RESISTOR	10K	1/16W
R455	NRSA63J-682	M.G.RESISTOR	6.8K	1/16W
R456	NRSA63J-473	M.G.RESISTOR	47K	1/16W
R457	NRSA63J-562	M.G.RESISTOR	5.6K	1/16W
R458	NRSA63J-102	M.G.RESISTOR	1.0K	1/16W
R459	NRSA63J-821	M.G.RESISTOR	820	1/16W
R460	NRSA63J-102	M.G.RESISTOR	1.0K	1/16W
R461	NRSA63J-122	M.G.RESISTOR	1.2K	1/16W
R462	NRSA63J-222	M.G.RESISTOR	2.2K	1/16W
R463	NRSA63J-471	M.G.RESISTOR	470	1/16W
R464	NRSA63J-471	M.G.RESISTOR	470	1/16W
R465	NRSA63J-472	M.G.RESISTOR	4.7K	1/16W
R466	NRSA63J-681	M.G.RESISTOR	680	1/16W
R467	NRSA63J-560	M.G.RESISTOR	56	1/16W
R468	NRSA63J-560	M.G.RESISTOR	56	1/16W
R469	NRSA63J-102	M.G.RESISTOR	1.0K	1/16W
R470	NRSA63J-102	M.G.RESISTOR	1.0K	1/16W
R471	NRSA63J-102	M.G.RESISTOR	1.0K	1/16W
R472	NRSA63J-102	M.G.RESISTOR	1.0K	1/16W
R473	NRSA63J-272	M.G.RESISTOR	2.7K	1/16W
R474	NRSA63J-471	M.G.RESISTOR	470	1/16W
R475	NRSA63J-272	M.G.RESISTOR	2.7K	1/16W
R476	NRSA63J-103	M.G.RESISTOR	10K	1/16W
R477	NRSA63J-272	M.G.RESISTOR	2.7K	1/16W
R478	NRSA63J-471	M.G.RESISTOR	470	1/16W
R481	NRSA63J-102	M.G.RESISTOR	1.0K	1/16W
R482	NRSA63J-102	M.G.RESISTOR	1.0K	1/16W
R483	NRSA63J-0R0	M.G.RESISTOR	0	1/16W
R484	NRSA63J-102	M.G.RESISTOR	1.0K	1/16W
R485	NRSA63J-102	M.G.RESISTOR	1.0K	1/16W
R486	NRSA63J-102	M.G.RESISTOR	1.0K	1/16W
VR3	NVP1416-102	TRIM.RESISTOR	CPNR FREQ	
VR5	NVP1416-102	TRIM.RESISTOR	CPNR DL	
VR6	NVP1416-102	TRIM.RESISTOR	CPNB LEV	
VR8	NVP1416-102	TRIM.RESISTOR	CPNB DL	
VR9	NVP1416-501	TRIM.RESISTOR	CPSR LEV	
VR10	NVP1416-102	TRIM.RESISTOR	CPSR DL	
VR11	NVP1416-203	TRIM.RESISTOR	R-Y BAL	
VR12	NVP1416-501	TRIM.RESISTOR	CPSB LEV	
VR13	NVP1416-203	TRIM.RESISTOR	B-Y BAL	
VR301	NVP1416-102	TRIM.RESISTOR	ENCC DL	
VR302	NVP1416-502	TRIM.RESISTOR	HUE	
VR303	NVP1416-103	TRIM.RESISTOR	BST BAL	
VR304	NVP1416-501	TRIM.RESISTOR	BST LEV	
RA301	NRB082J-101	RESISTOR ARRAY		
C1	NEZ0001-107	E.CAPACITOR	100	
C2	NEH90JM-336	E.CAPACITOR	33	6.3V
C4	NCS31HJ-180	CER.CAPACITOR	18P	50V
C5	NCB31HK-103	CER.CAPACITOR	0.010	50V
C6	NCB31HK-103	CER.CAPACITOR	0.010	50V

Symbol No.	Part No.	Part Name	Description	
C7	NEZ0001-107	E.CAPACITOR	100	
C8	NCB31HK-103	CER.CAPACITOR	0.010	50V
C9	NCB31HK-103	CER.CAPACITOR	0.010	50V
C10	NEZ0001-107	E.CAPACITOR	100	
C11	NCB31HK-103	CER.CAPACITOR	0.010	50V
C12	NCB31HK-103	CER.CAPACITOR	0.010	50V
C25	NEZ0001-107	E.CAPACITOR	100	
C26	NEH90JM-336	E.CAPACITOR	33	6.3V
C28	NCB31HK-103	CER.CAPACITOR	0.010	50V
C29	NCB31HK-103	CER.CAPACITOR	0.010	50V
C30	NEZ0001-107	E.CAPACITOR	100	
C31	NEZ0001-107	E.CAPACITOR	100	
C32	NCB31HK-103	CER.CAPACITOR	0.010	50V
C33	NCB31HK-103	CER.CAPACITOR	0.010	50V
C34	NCB31HK-103	CER.CAPACITOR	0.010	50V
C35	NCB31HK-103	CER.CAPACITOR	0.010	50V
C36	NCB31HK-103	CER.CAPACITOR	0.010	50V
C37	NCB31HK-103	CER.CAPACITOR	0.010	50V
C38	NEZ0001-107	E.CAPACITOR	100	
C39	NEZ0001-107	E.CAPACITOR	100	
C40	NCB31HK-103	CER.CAPACITOR	0.010	50V
C41	NEZ0001-107	E.CAPACITOR	100	
C42	NCB31HK-103	CER.CAPACITOR	0.010	50V
C43	NCB31HK-103	CER.CAPACITOR	0.010	50V
C44	NEH91CM-476	E.CAPACITOR	47	16V
C45	NCB31HK-103	CER.CAPACITOR	0.010	50V
C46	NCB31HK-103	CER.CAPACITOR	0.010	50V
C47	NEZ0001-107	E.CAPACITOR	100	
C48	NCB31HK-103	CER.CAPACITOR	0.010	50V
C49	NCB31HK-103	CER.CAPACITOR	0.010	50V
C50	NEZ0001-107	E.CAPACITOR	100	
C51	NEH90JM-336	E.CAPACITOR	33	6.3V
C53	NCB31HK-103	CER.CAPACITOR	0.010	50V
C54	NCB31HK-103	CER.CAPACITOR	0.010	50V
C55	NEZ0001-107	E.CAPACITOR	100	
C56	NEZ0001-107	E.CAPACITOR	100	
C57	NCB31HK-103	CER.CAPACITOR	0.010	50V
C58	NCB31HK-103	CER.CAPACITOR	0.010	50V
C59	NCB31HK-103	CER.CAPACITOR	0.010	50V
C60	NCB31HK-103	CER.CAPACITOR	0.010	50V
C61	NCB31HK-103	CER.CAPACITOR	0.010	50V
C62	NCB31HK-103	CER.CAPACITOR	0.010	50V
C63	NEZ0001-107	E.CAPACITOR	100	
C64	NEZ0001-107	E.CAPACITOR	100	
C65	NCB31HK-103	CER.CAPACITOR	0.010	50V
C66	NEZ0001-107	E.CAPACITOR	100	
C67	NCB31HK-103	CER.CAPACITOR	0.010	50V
C68	NCB31HK-103	CER.CAPACITOR	0.010	50V
C69	NEZ0001-107	E.CAPACITOR	100	
C70	NCB31HK-103	CER.CAPACITOR	0.010	50V
C71	NCB31HK-103	CER.CAPACITOR	0.010	50V
C72	NEZ0001-107	E.CAPACITOR	100	
C73	NEH90JM-336	E.CAPACITOR	33	6.3V
C74	NEZ0001-107	E.CAPACITOR	100	
C75	NCB31HK-103	CER.CAPACITOR	0.010	50V
C76	NCB31HK-103	CER.CAPACITOR	0.010	50V
C77	NCB31HK-103	CER.CAPACITOR	0.010	50V
C78	NEZ0001-107	E.CAPACITOR	100	
C79	NCB31HK-103	CER.CAPACITOR	0.010	50V

OUT ENC]

Symbol No.	Part No.	Part Name	Description	
C80	NCB31HK-103	CER.CAPACITOR	0.010	50V
C81	NCB31HK-103	CER.CAPACITOR	0.010	50V
C82	NCB31HK-103	CER.CAPACITOR	0.010	50V
C83	NCB31HK-103	CER.CAPACITOR	0.010	50V
C84	NCB31HK-103	CER.CAPACITOR	0.010	50V
C85	NCB31HK-103	CER.CAPACITOR	0.010	50V
C86	NCB31HK-103	CER.CAPACITOR	0.010	50V
C87	NEN21HM-105	NP.CAPACITOR	1.0	50V
C88	NEH91CM-476	E.CAPACITOR	47	16V
C89	NCB31HK-103	CER.CAPACITOR	0.010	50V
C90	NCB31HK-103	CER.CAPACITOR	0.010	50V
C91	NEZ0001-107	E.CAPACITOR	100	
C92	NCB31HK-103	CER.CAPACITOR	0.010	50V
C93	NCB31HK-103	CER.CAPACITOR	0.010	50V
C94	NEZ0001-107	E.CAPACITOR	100	
C95	NCB31HK-103	CER.CAPACITOR	0.010	50V
C96	NCB31HK-103	CER.CAPACITOR	0.010	50V
C97	NEZ0001-107	E.CAPACITOR	100	
C98	NEH90JM-336	E.CAPACITOR	33	6.3V
C99	NEZ0001-107	E.CAPACITOR	100	
C100	NCB31HK-103	CER.CAPACITOR	0.010	50V
C101	NCB31HK-103	CER.CAPACITOR	0.010	50V
C102	NCB31HK-103	CER.CAPACITOR	0.010	50V
C103	NEZ0001-107	E.CAPACITOR	100	
C104	NCB31HK-103	CER.CAPACITOR	0.010	50V
C105	NCB31HK-103	CER.CAPACITOR	0.010	50V
C106	NCB31HK-103	CER.CAPACITOR	0.010	50V
C107	NCB31HK-103	CER.CAPACITOR	0.010	50V
C108	NCB31HK-103	CER.CAPACITOR	0.010	50V
C109	NCB31HK-103	CER.CAPACITOR	0.010	50V
C110	NCB31HK-103	CER.CAPACITOR	0.010	50V
C111	NCB31HK-103	CER.CAPACITOR	0.010	50V
C112	NEN21HM-105	NP.CAPACITOR	1.0	50V
C113	NEZ0001-107	E.CAPACITOR	100	
C114	NCB31HK-103	CER.CAPACITOR	0.010	50V
C115	NCB31HK-103	CER.CAPACITOR	0.010	50V
C116	NEZ0001-107	E.CAPACITOR	100	
C117	NCB31HK-103	CER.CAPACITOR	0.010	50V
C118	NCB31HK-103	CER.CAPACITOR	0.010	50V
C124	NCS31HJ-390	CER.CAPACITOR	39P	50V
C126	NCS31HJ-390	CER.CAPACITOR	39P	50V
C127	NCF31CZ-104	CER.CAPACITOR	0.10	16V
C128	NCF31CZ-104	CER.CAPACITOR	0.10	16V
C129	NCS31HJ-221	CER.CAPACITOR	220P	50V
C131	NCS31HJ-221	CER.CAPACITOR	220P	50V
C132	NCS31HJ-221	CER.CAPACITOR	220P	50V
C133	NCS31HJ-221	CER.CAPACITOR	220P	50V
C134	NCS31HJ-221	CER.CAPACITOR	220P	50V
C135	NCS31HJ-330	CER.CAPACITOR	33P	50V
C136	NCS31HJ-330	CER.CAPACITOR	33P	50V
C301	NCB31HK-103	CER.CAPACITOR	0.010	50V
C302	NCB31HK-103	CER.CAPACITOR	0.010	50V
C303	NCB31HK-103	CER.CAPACITOR	0.010	50V
C304	NCB31HK-103	CER.CAPACITOR	0.010	50V
C305	NCB31HK-103	CER.CAPACITOR	0.010	50V
C306	NCB31HK-103	CER.CAPACITOR	0.010	50V
C307	NCB31HK-103	CER.CAPACITOR	0.010	50V
C308	NCB31HK-103	CER.CAPACITOR	0.010	50V
C309	NCB31HK-103	CER.CAPACITOR	0.010	50V

Symbol No.	Part No.	Part Name	Description	
C310	NCB31HK-103	CER.CAPACITOR	0.010	50V
C311	NEH91CM-476	E.CAPACITOR	47	16V
C312	NCB31HK-103	CER.CAPACITOR	0.010	50V
C313	NCB31HK-103	CER.CAPACITOR	0.010	50V
C314	NEZ0001-107	E.CAPACITOR	100	
C315	NCB31HK-103	CER.CAPACITOR	0.010	50V
C316	NCB31HK-103	CER.CAPACITOR	0.010	50V
C317	NCS31HJ-101	CER.CAPACITOR	100P	50V
C318	NCB31HK-103	CER.CAPACITOR	0.010	50V
C319	NCS31HJ-101	CER.CAPACITOR	100P	50V
C328	NCB31HK-103	CER.CAPACITOR	0.010	50V
C329	NCB31HK-103	CER.CAPACITOR	0.010	50V
C330	NEZ0001-107	E.CAPACITOR	100	
C331	NCB31HK-103	CER.CAPACITOR	0.010	50V
C332	NCB31HK-103	CER.CAPACITOR	0.010	50V
C333	NEZ0001-107	E.CAPACITOR	100	
C334	NCB31HK-103	CER.CAPACITOR	0.010	50V
C335	NCB31HK-103	CER.CAPACITOR	0.010	50V
C336	NCB31HK-103	CER.CAPACITOR	0.010	50V
C337	NCB31HK-103	CER.CAPACITOR	0.010	50V
C338	NCB31HK-103	CER.CAPACITOR	0.010	50V
C339	NEH61HM-105	E.CAPACITOR	1.0	50V
C340	NCB31HK-103	CER.CAPACITOR	0.010	50V
C341	NEF11VM-104	TAN.CAPACITOR	0.10	35V
C342	NCF31CZ-104	CER.CAPACITOR	0.10	16V
C343	NCB31HK-103	CER.CAPACITOR	0.010	50V
C344	NEH91CM-476	E.CAPACITOR	47	16V
C345	NCB31HK-103	CER.CAPACITOR	0.010	50V
C346	NCB31HK-103	CER.CAPACITOR	0.010	50V
C347	NCB31HK-103	CER.CAPACITOR	0.010	50V
C348	NCB31HK-103	CER.CAPACITOR	0.010	50V
C349	NCB31HK-103	CER.CAPACITOR	0.010	50V
C350	NEZ0001-107	E.CAPACITOR	100	
C351	NCB31HK-103	CER.CAPACITOR	0.010	50V
C352	NCB31HK-103	CER.CAPACITOR	0.010	50V
C353	NCB31HK-103	CER.CAPACITOR	0.010	50V
C354	NCB31HK-103	CER.CAPACITOR	0.010	50V
C355	NEZ0001-107	E.CAPACITOR	100	
C356	NCB31HK-103	CER.CAPACITOR	0.010	50V
C357	NCB31HK-103	CER.CAPACITOR	0.010	50V
C364	NCB31HK-103	CER.CAPACITOR	0.010	50V
C365	NCB31HK-103	CER.CAPACITOR	0.010	50V
C366	NEZ0001-107	E.CAPACITOR	100	
C367	NCB31HK-103	CER.CAPACITOR	0.010	50V
C368	NCB31HK-103	CER.CAPACITOR	0.010	50V
C369	NCB31HK-103	CER.CAPACITOR	0.010	50V
C370	NEF11CM-105	TAN.CAPACITOR	1.0	16V
C371	NFV41CJ-104	FILM CAPACITOR	0.10	16V
C372	NCB31HK-103	CER.CAPACITOR	0.010	50V
C373	NCB31HK-103	CER.CAPACITOR	0.010	50V
C374	NCB31HK-103	CER.CAPACITOR	0.010	50V
C375	NCB31HK-103	CER.CAPACITOR	0.010	50V
C376	NEZ0001-107	E.CAPACITOR	100	
C377	NCB31HK-103	CER.CAPACITOR	0.010	50V
C378	NCB31HK-103	CER.CAPACITOR	0.010	50V
C379	NCB31HK-103	CER.CAPACITOR	0.010	50V
C380	NCB31HK-103	CER.CAPACITOR	0.010	50V
C381	NEZ0001-107	E.CAPACITOR	100	
C382	NCB31HK-103	CER.CAPACITOR	0.010	50V

Symbol No.	Part No.	Part Name	Description	
C383	NCB31HK-103	CER.CAPACITOR	0.010	50V
C395	NCB31HK-103	CER.CAPACITOR	0.010	50V
C396	NCB31HK-103	CER.CAPACITOR	0.010	50V
C397	NFV41HJ-102	FILM CAPACITOR	1000P	50V
C398	NCB31HK-103	CER.CAPACITOR	0.010	50V
C399	NFV41HJ-102	FILM CAPACITOR	1000P	50V
C400	NEZ0001-107	E.CAPACITOR	100	
C401	NCB31HK-103	CER.CAPACITOR	0.010	50V
C402	NCB31HK-103	CER.CAPACITOR	0.010	50V
C403	NCS31HJ-330	CER.CAPACITOR	33P	50V
C404	NCS31HJ-221	CER.CAPACITOR	220P	50V
C405	NCB31HK-103	CER.CAPACITOR	0.010	50V
C406	NCB31HK-103	CER.CAPACITOR	0.010	50V
C407	NCB31HK-103	CER.CAPACITOR	0.010	50V
C408	NCB31HK-103	CER.CAPACITOR	0.010	50V
C409	NCB31HK-103	CER.CAPACITOR	0.010	50V
C410	NEH91CM-476	E.CAPACITOR	47	16V
C411	NCB31HK-103	CER.CAPACITOR	0.010	50V
C412	NCB31HK-103	CER.CAPACITOR	0.010	50V
C413	NEZ0001-107	E.CAPACITOR	100	
C414	NCB31HK-103	CER.CAPACITOR	0.010	50V
C415	NCB31HK-103	CER.CAPACITOR	0.010	50V
VC1	QAT3661-500	TRIM.CAPACITOR	Y FREQ	
VC3	QAT3661-500	TRIM.CAPACITOR	CPNR FREQ	
VC4	QAT3661-500	TRIM.CAPACITOR	CPNB FREQ	
L301	PU58201-680	COIL	68μ	
LC301	PGZ01972	NOISE FILTER		
LC302	PGZ01972	NOISE FILTER		
X601	PGZ01521	CRYSTAL	14.31818MHz	
X602	PGZ01521	CRYSTAL	14.31818MHz	
S1	SCV1919-004	DIP SWITCH		
CN1	PGZ02142-120	CONNECTOR	120PIN	
CN2	PGZ02142-100	CONNECTOR	100PIN	
TP1	SCV1880-001	TEST POINT		
TP3	SCV1880-001	TEST POINT		
TP4	SCV1880-001	TEST POINT		
TP5	SCV1880-001	TEST POINT		
TP6	SCV1880-001	TEST POINT		
TP7	SCV1880-001	TEST POINT		
TP8	SCV1880-001	TEST POINT		
TP51	SCV1880-001	TEST POINT		
TP52	SCV1880-001	TEST POINT		
TP53	SCV1880-001	TEST POINT		
TP54	SCV1880-001	TEST POINT		
TP55	SCV1880-001	TEST POINT		
TP56	SCV1880-001	TEST POINT		
TP301	SCV1880-001	TEST POINT		
TP302	SCV1880-001	TEST POINT		

Symbol No.	Part No.	Part Name	Description
TP303	SCV1880-001	TEST POINT	
TP304	SCV1880-001	TEST POINT	
TP305	SCV1880-001	TEST POINT	
TP351	SCV1880-001	TEST POINT	
TP352	SCV1880-001	TEST POINT	
TP353	SCV1880-001	TEST POINT	
TP354	SCV1880-001	TEST POINT	
TP355	SCV1880-001	TEST POINT	
FL1	PELN0320	LPF	
FL2	PGZ02183	EQUALIZER	
FL5	PGZ02181	LPF	
FL6	PGZ02182	EQUALIZER	
FL7	PGZ02181	LPF	
FL8	PGZ02182	EQUALIZER	
FL9	PGZ02181	LPF	
FL10	PGZ02182	EQUALIZER	
FL11	PGZ02181	LPF	
FL12	PGZ02182	EQUALIZER	
FL301	PGZ02207	BPF	
TB1	PGZ02228	EARTH LUG	
TB2	PGZ02228	EARTH LUG	
TB3	PGZ02228	EARTH LUG	
TB4	PGZ02228	EARTH LUG	
SL1	PRD20530	SHIELD CASE	
SC1	DPSP2606Z	SCREW	M2.6×6
SP1	PGZ00582	SPACER	

5.11 ANA AUDIO BOARD ASSEMBLY LIST [2][0]

SLK2022-A2A [2][0]□□□□□□□

Symbol No.	Part No.	Part Name	Description
IC1	XRA7765AS	I.C.(M)	EXAR
IC2	XRA7765AS	I.C.(M)	EXAR
IC3	M5218AFP	I.C.(M)	MITSUBISHI
IC4	M5218AFP	I.C.(M)	MITSUBISHI
IC5	M5218AFP	I.C.(M)	MITSUBISHI
IC6	M5218AFP	I.C.(M)	MITSUBISHI
IC7	TC4094BF	I.C.(M)	TOSHIBA
IC8	TC4094BF	I.C.(M)	TOSHIBA
IC9	UPC78L12T	I.C.(M)	NEC
IC10	UPC78L12T	I.C.(M)	NEC
IC31	NJM4560M	I.C.(M)	JRC
IC32	M5218AFP	I.C.(M)	MITSUBISHI
Q1	DTC124EK	TRANSISTOR	ROHM
Q2	DTA124EK	TRANSISTOR	ROHM
Q3	DTC124EK	TRANSISTOR	ROHM
Q4	DTC124EK	TRANSISTOR	ROHM
Q5	DTC124EK	TRANSISTOR	ROHM
Q6	DTC124EK	TRANSISTOR	ROHM
Q7	DTC124EK	TRANSISTOR	ROHM
Q8	DTC124EK	TRANSISTOR	ROHM
Q9	DTC124EK	TRANSISTOR	ROHM
Q10	DTA124EK	TRANSISTOR	ROHM
Q11	DTC124EK	TRANSISTOR	ROHM
Q12	DTA124EK	TRANSISTOR	ROHM
Q13	DTA124EK	TRANSISTOR	ROHM
Q14	DTA124EK	TRANSISTOR	ROHM
Q15	DTC323TK	TRANSISTOR	ROHM
Q16	DTC323TK	TRANSISTOR	ROHM
Q17	DTA124EK	TRANSISTOR	ROHM
Q18	DTA124EK	TRANSISTOR	ROHM
Q19	DTC323TK	TRANSISTOR	ROHM
Q20	DTC323TK	TRANSISTOR	ROHM
Q31	2SD1994A(RS)	TRANSISTOR	MATSUSHITA
Q32	2SD1994A(RS)	TRANSISTOR	MATSUSHITA
Q33	2SC2412K(QR)	TRANSISTOR	ROHM
Q34	2SC2412K(QR)	TRANSISTOR	ROHM
Q35	2SC2412K(QR)	TRANSISTOR	ROHM
Q36	2SC2412K(QR)	TRANSISTOR	ROHM
Q37	2SC2412K(QR)	TRANSISTOR	ROHM
Q38	2SC2412K(QR)	TRANSISTOR	ROHM
Q39	2SC2412K(QR)	TRANSISTOR	ROHM
Q40	2SC2412K(QR)	TRANSISTOR	ROHM
Q41	2SC2412K(QR)	TRANSISTOR	ROHM
Q42	2SC2412K(QR)	TRANSISTOR	ROHM
Q43	2SA1037K(QR)	TRANSISTOR	ROHM
Q44	2SA1037K(QR)	TRANSISTOR	ROHM
Q45	2SC2412K(QR)	TRANSISTOR	ROHM
Q46	2SC2412K(QR)	TRANSISTOR	ROHM
Q47	2SD1994A(RS)	TRANSISTOR	MATSUSHITA
Q48	2SD1994A(RS)	TRANSISTOR	MATSUSHITA
Q49	2SB1322A(RS)	TRANSISTOR	MATSUSHITA
Q50	2SB1322A(RS)	TRANSISTOR	MATSUSHITA
Q51	2SC2412K(QR)	TRANSISTOR	ROHM
Q52	2SC2412K(QR)	TRANSISTOR	ROHM
Q53	2SC2412K(QR)	TRANSISTOR	ROHM
Q54	2SC2412K(QR)	TRANSISTOR	ROHM
Q55	DTA124EK	TRANSISTOR	ROHM
Q56	DTA124EK	TRANSISTOR	ROHM

Symbol No.	Part No.	Part Name	Description
Q57	DTC124EK	TRANSISTOR	ROHM
Q58	DTC124EK	TRANSISTOR	ROHM
Q59	DTA124EK	TRANSISTOR	ROHM
Q60	DTA124EK	TRANSISTOR	ROHM
D31	RD5.6ES	ZENER DIODE	NEC
D32	RD5.6ES	ZENER DIODE	NEC
D33	DA204K	DIODE	ROHM
R1	NRSA02J-223	M.G.RESISTOR	22K 1/10W
R2	NRSA02J-223	M.G.RESISTOR	22K 1/10W
R3	NRSA02J-101	M.G.RESISTOR	100 1/10W
R4	NRSA02J-101	M.G.RESISTOR	100 1/10W
R5	NRSA02J-124	M.G.RESISTOR	120K 1/10W
R6	NRSA02J-124	M.G.RESISTOR	120K 1/10W
R7	NRSA02J-561	M.G.RESISTOR	560 1/10W
R8	NRSA02J-561	M.G.RESISTOR	560 1/10W
R9	NRSA02J-102	M.G.RESISTOR	1.0K 1/10W
R10	NRSA02J-102	M.G.RESISTOR	1.0K 1/10W
R11	NRSA02J-102	M.G.RESISTOR	1.0K 1/10W
R12	NRSA02J-102	M.G.RESISTOR	1.0K 1/10W
R13	NRSA02J-103	M.G.RESISTOR	10K 1/10W
R14	NRSA02J-103	M.G.RESISTOR	10K 1/10W
R15	NRSA02J-103	M.G.RESISTOR	10K 1/10W
R16	NRSA02J-103	M.G.RESISTOR	10K 1/10W
R17	NRSA02J-183	M.G.RESISTOR	18K 1/10W
R18	NRSA02J-183	M.G.RESISTOR	18K 1/10W
R19	NRSA02J-102	M.G.RESISTOR	1.0K 1/10W
R20	NRSA02J-102	M.G.RESISTOR	1.0K 1/10W
R21	NRSA02J-202	M.G.RESISTOR	2.0K 1/10W
R22	NRSA02J-202	M.G.RESISTOR	2.0K 1/10W
R23	NRSA02J-472	M.G.RESISTOR	4.7K 1/10W
R24	NRSA02J-472	M.G.RESISTOR	4.7K 1/10W
R25	NRSA02J-182	M.G.RESISTOR	1.8K 1/10W
R26	NRSA02J-182	M.G.RESISTOR	1.8K 1/10W
R27	NRSA02J-823	M.G.RESISTOR	82K 1/10W
R28	NRSA02J-823	M.G.RESISTOR	82K 1/10W
R29	NRSA02J-823	M.G.RESISTOR	82K 1/10W
R30	NRSA02J-823	M.G.RESISTOR	82K 1/10W
R31	NRSA02J-122	M.G.RESISTOR	1.2K 1/10W
R32	NRSA02J-122	M.G.RESISTOR	1.2K 1/10W
R33	NRSA02J-473	M.G.RESISTOR	47K 1/10W
R34	NRSA02J-473	M.G.RESISTOR	47K 1/10W
R35	NRSA02J-0R0	M.G.RESISTOR	0 1/10W
R36	NRSA02J-392	M.G.RESISTOR	3.9K 1/10W
R43	NRSA02J-823	M.G.RESISTOR	82K 1/10W
R47	NRSA02J-333	M.G.RESISTOR	33K 1/10W
R55	NRSA02J-333	M.G.RESISTOR	33K 1/10W
R65	NRSA02J-822	M.G.RESISTOR	8.2K 1/10W
R72	NRSA02J-823	M.G.RESISTOR	82K 1/10W
R301	NRSA02J-824	M.G.RESISTOR	820K 1/10W
R302	NRSA02J-822	M.G.RESISTOR	8.2K 1/10W
R303	NRSA02J-821	M.G.RESISTOR	820 1/10W
R304	NRSA02J-823	M.G.RESISTOR	82K 1/10W
R305	NRSA02J-823	M.G.RESISTOR	82K 1/10W
R306	NRSA02J-153	M.G.RESISTOR	15K 1/10W
R307	NRSA02J-682	M.G.RESISTOR	6.8K 1/10W
R308	NRSA02J-682	M.G.RESISTOR	6.8K 1/10W
R309	NRSA02J-153	M.G.RESISTOR	15K 1/10W

Symbol No.	Part No.	Part Name	Description	
R310	NRSA02J-822	M.G.RESISTOR	8.2K	1/10W
R311	NRSA02J-273	M.G.RESISTOR	27K	1/10W
R312	NRSA02J-273	M.G.RESISTOR	27K	1/10W
R313	NRSA02J-123	M.G.RESISTOR	12K	1/10W
R314	NRSA02J-123	M.G.RESISTOR	12K	1/10W
R315	NRSA02J-681	M.G.RESISTOR	680	1/10W
R316	NRSA02J-681	M.G.RESISTOR	680	1/10W
R317	NRSA02J-332	M.G.RESISTOR	3.3K	1/10W
R318	NRSA02J-332	M.G.RESISTOR	3.3K	1/10W
R319	NRSA02J-393	M.G.RESISTOR	39K	1/10W
R320	NRSA02J-393	M.G.RESISTOR	39K	1/10W
R321	NRSA02J-182	M.G.RESISTOR	1.8K	1/10W
R322	NRSA02J-182	M.G.RESISTOR	1.8K	1/10W
R323	NRSA02J-180	M.G.RESISTOR	18	1/10W
R324	NRSA02J-180	M.G.RESISTOR	18	1/10W
R325	NRSA02J-221	M.G.RESISTOR	220	1/10W
R326	NRSA02J-221	M.G.RESISTOR	220	1/10W
R327	NRSA02J-122	M.G.RESISTOR	1.2K	1/10W
R328	NRSA02J-122	M.G.RESISTOR	1.2K	1/10W
R329	NRSA02J-392	M.G.RESISTOR	3.9K	1/10W
R330	NRSA02J-392	M.G.RESISTOR	3.9K	1/10W
R331	NRSA02J-223	M.G.RESISTOR	22K	1/10W
R332	NRSA02J-223	M.G.RESISTOR	22K	1/10W
R333	NRSA02J-392	M.G.RESISTOR	3.9K	1/10W
R334	NRSA02J-392	M.G.RESISTOR	3.9K	1/10W
R335	NRSA02J-561	M.G.RESISTOR	560	1/10W
R336	NRSA02J-561	M.G.RESISTOR	560	1/10W
R337	NRSA02J-122	M.G.RESISTOR	1.2K	1/10W
R338	NRSA02J-122	M.G.RESISTOR	1.2K	1/10W
R339	NRSA02J-273	M.G.RESISTOR	27K	1/10W
R340	NRSA02J-273	M.G.RESISTOR	27K	1/10W
R341	NRSA02J-563	M.G.RESISTOR	56K	1/10W
R342	NRSA02J-563	M.G.RESISTOR	56K	1/10W
R343	NRSA02J-822	M.G.RESISTOR	8.2K	1/10W
R344	NRSA02J-822	M.G.RESISTOR	8.2K	1/10W
R345	NRSA02J-2R2	M.G.RESISTOR	2.2	1/10W
R346	NRSA02J-2R2	M.G.RESISTOR	2.2	1/10W
R347	NRSA02J-181	M.G.RESISTOR	180	1/10W
R348	NRSA02J-181	M.G.RESISTOR	180	1/10W
R349	NRSA02J-2R2	M.G.RESISTOR	2.2	1/10W
R350	NRSA02J-2R2	M.G.RESISTOR	2.2	1/10W
R351	NRSA02J-272	M.G.RESISTOR	2.7K	1/10W
R352	NRSA02J-272	M.G.RESISTOR	2.7K	1/10W
R353	NRSA02J-563	M.G.RESISTOR	56K	1/10W
R354	NRSA02J-563	M.G.RESISTOR	56K	1/10W
R355	NRSA02J-822	M.G.RESISTOR	8.2K	1/10W
R356	NRSA02J-822	M.G.RESISTOR	8.2K	1/10W
R357	NRSA02J-473	M.G.RESISTOR	47K	1/10W
R358	NRSA02J-473	M.G.RESISTOR	47K	1/10W
R359	NRSA02J-473	M.G.RESISTOR	47K	1/10W
R360	NRSA02J-473	M.G.RESISTOR	47K	1/10W
R361	NRSA02J-221	M.G.RESISTOR	220	1/10W
R362	NRSA02J-221	M.G.RESISTOR	220	1/10W
R363	NRSA02J-222	M.G.RESISTOR	2.2K	1/10W
R364	NRSA02J-222	M.G.RESISTOR	2.2K	1/10W
R365	NRSA02J-221	M.G.RESISTOR	220	1/10W
R366	NRSA02J-221	M.G.RESISTOR	220	1/10W
R367	NRSA02J-222	M.G.RESISTOR	2.2K	1/10W
R368	NRSA02J-222	M.G.RESISTOR	2.2K	1/10W
R369	QRD121J-3R3	C.RESISTOR	3.3	1/2W

Symbol No.	Part No.	Part Name	Description	
R370	QRD121J-3R3	C.RESISTOR	3.3	1/2W
R371	QRD121J-3R3	C.RESISTOR	3.3	1/2W
R372	QRD121J-3R3	C.RESISTOR	3.3	1/2W
R373	NRS016J-120	M.G.RESISTOR	12	1W
R374	NRS016J-120	M.G.RESISTOR	12	1W
R375	NRSA02J-222	M.G.RESISTOR	2.2K	1/10W
R376	NRSA02J-222	M.G.RESISTOR	2.2K	1/10W
R377	NRSA02J-2R2	M.G.RESISTOR	2.2	1/10W
R378	NRSA02J-2R2	M.G.RESISTOR	2.2	1/10W
R379	NRSA02J-2R2	M.G.RESISTOR	2.2	1/10W
R380	NRSA02J-2R2	M.G.RESISTOR	2.2	1/10W
R381	NRSA02J-222	M.G.RESISTOR	2.2K	1/10W
R382	NRSA02J-222	M.G.RESISTOR	2.2K	1/10W
R383	NRSA02J-103	M.G.RESISTOR	10K	1/10W
R384	NRSA02J-103	M.G.RESISTOR	10K	1/10W
R385	NRSA02J-822	M.G.RESISTOR	8.2K	1/10W
R401	NRSA02J-823	M.G.RESISTOR	82K	1/10W
R402	NRSA02J-823	M.G.RESISTOR	82K	1/10W
R403	NRSA02J-102	M.G.RESISTOR	1.0K	1/10W
R404	NRSA02J-102	M.G.RESISTOR	1.0K	1/10W
R405	NRSA02J-105	M.G.RESISTOR	1.0M	1/10W
R406	NRSA02J-105	M.G.RESISTOR	1.0M	1/10W
R407	NRSA02J-103	M.G.RESISTOR	10K	1/10W
R408	NRSA02J-103	M.G.RESISTOR	10K	1/10W
R409	NRSA02J-681	M.G.RESISTOR	680	1/10W
R410	NRSA02J-681	M.G.RESISTOR	680	1/10W
R411	NRSA02J-103	M.G.RESISTOR	10K	1/10W
R412	NRSA02J-103	M.G.RESISTOR	10K	1/10W
R413	NRSA02J-562	M.G.RESISTOR	5.6K	1/10W
R414	NRSA02J-562	M.G.RESISTOR	5.6K	1/10W
R415	NRSA02J-562	M.G.RESISTOR	5.6K	1/10W
R416	NRSA02J-562	M.G.RESISTOR	5.6K	1/10W
R417	NRSA02J-104	M.G.RESISTOR	100K	1/10W
R418	NRSA02J-104	M.G.RESISTOR	100K	1/10W
R419	NRSA02J-123	M.G.RESISTOR	12K	1/10W
R420	NRSA02J-223	M.G.RESISTOR	22K	1/10W
R421	NRSA02J-223	M.G.RESISTOR	22K	1/10W
R422	NRSA02J-223	M.G.RESISTOR	22K	1/10W
C1	NCS21HJ-821	CER.CAPACITOR	820P	50V
C2	NCS21HJ-821	CER.CAPACITOR	820P	50V
C3	QEBA1EM-475	E.CAPACITOR	4.7	25V
C4	QEBA1EM-475	E.CAPACITOR	4.7	25V
C5	QCSA1HJ-680	CER.CAPACITOR	68P	50V
C6	QCSA1HJ-680	CER.CAPACITOR	68P	50V
C7	QFN31HK-273	MY.CAPACITOR	0.027	50V
C8	QFN31HK-273	MY.CAPACITOR	0.027	50V
C9	NCS21HJ-101	CER.CAPACITOR	100P	50V
C10	NCS21HJ-101	CER.CAPACITOR	100P	50V
C11	QETA1EM-107	E.CAPACITOR	100	25V
C12	QETA1EM-107	E.CAPACITOR	100	25V
C15	QEPA1CM-106	E.CAPACITOR	10	16V
C16	QEPA1CM-106	E.CAPACITOR	10	16V
C17	NCS21HJ-331	CER.CAPACITOR	330P	50V
C18	NCS21HJ-331	CER.CAPACITOR	330P	50V
C19	NCS21HJ-331	CER.CAPACITOR	330P	50V
C20	NCS21HJ-331	CER.CAPACITOR	330P	50V
C21	QEK61EM-476	E.CAPACITOR	47	25V
C22	QEK61EM-476	E.CAPACITOR	47	25V

[ANA AUDIO]

Symbol No.	Part No.	Part Name	Description	
C23	QEK61EM-476	E.CAPACITOR	47	25V
C24	QEK61EM-476	E.CAPACITOR	47	25V
C25	QEK61HM-105	E.CAPACITOR	1.0	50V
C26	QEK61HM-105	E.CAPACITOR	1.0	50V
C27	QEPA1EM-106	E.CAPACITOR	10	25V
C28	QEPA1EM-106	E.CAPACITOR	10	25V
C29	QEK61HM-106	E.CAPACITOR	10	50V
C30	QEK61HM-106	E.CAPACITOR	10	50V
C31	QEK61HM-106	E.CAPACITOR	10	50V
C32	QEK61HM-106	E.CAPACITOR	10	50V
C33	QEK61HM-106	E.CAPACITOR	10	50V
C34	QEK61HM-106	E.CAPACITOR	10	50V
C35	QETA1EM-226	E.CAPACITOR	22	25V
C36	QETA1EM-226	E.CAPACITOR	22	25V
C37	QEK61HM-106	E.CAPACITOR	10	50V
C38	QEK61HM-106	E.CAPACITOR	10	50V
C39	QEK61EM-476	E.CAPACITOR	47	25V
C40	QEK61EM-476	E.CAPACITOR	47	25V
C41	NCB21EK-104	CER.CAPACITOR	0.10	25V
C42	QEK61EM-476	E.CAPACITOR	47	25V
C43	QEK61EM-476	E.CAPACITOR	47	25V
C44	NCB21EK-104	CER.CAPACITOR	0.10	25V
C45	NCB21EK-104	CER.CAPACITOR	0.10	25V
C46	QEK61EM-476	E.CAPACITOR	47	25V
C47	QEK61EM-476	E.CAPACITOR	47	25V
C48	NCB21EK-104	CER.CAPACITOR	0.10	25V
C49	NCB21EK-104	CER.CAPACITOR	0.10	25V
C50	QEK61EM-476	E.CAPACITOR	47	25V
C51	QEK61EM-476	E.CAPACITOR	47	25V
C52	NCB21EK-104	CER.CAPACITOR	0.10	25V
C53	NCS21HJ-101	CER.CAPACITOR	100P	50V
C54	NCS21HJ-101	CER.CAPACITOR	100P	50V
C55	NCB21HK-822	CER.CAPACITOR	8200P	50V
C56	NCB21HK-822	CER.CAPACITOR	8200P	50V
C57	NCF21CZ-105	CER.CAPACITOR	1	16V
C58	NCF21CZ-105	CER.CAPACITOR	1	16V
C67	QEK61HM-106	E.CAPACITOR	10	50V
C301	NCB21HK-223	CER.CAPACITOR	0.022	50V
C302	NCS21HJ-271	CER.CAPACITOR	270P	50V
C303	NCS21HJ-271	CER.CAPACITOR	270P	50V
C304	NCB21HK-103	CER.CAPACITOR	0.010	50V
C305	NCS21HJ-271	CER.CAPACITOR	270P	50V
C306	QEK61EM-476	E.CAPACITOR	47	25V
C307	NCB21HK-103	CER.CAPACITOR	0.010	50V
C308	NCB21HK-103	CER.CAPACITOR	0.010	50V
C309	QEK61EM-476	E.CAPACITOR	47	25V
C310	QEK61EM-476	E.CAPACITOR	47	25V
C311	QEK61EM-476	E.CAPACITOR	47	25V
C312	QEK61EM-476	E.CAPACITOR	47	25V
C313	QFP32AJ-102	P.P.CAPACITOR	1000P	100V
C314	QFP32AJ-102	P.P.CAPACITOR	1000P	100V
C315	NCS21HJ-181	CER.CAPACITOR	180P	50V
C316	NCS21HJ-181	CER.CAPACITOR	180P	50V
C317	NCB21HK-103	CER.CAPACITOR	0.010	50V
C318	NCB21HK-103	CER.CAPACITOR	0.010	50V
C319	QETA1EM-226	E.CAPACITOR	22	25V
C320	QETA1EM-226	E.CAPACITOR	22	25V
C321	NCS21HJ-102	CER.CAPACITOR	1000P	50V
C322	NCS21HJ-102	CER.CAPACITOR	1000P	50V
C323	NCS21HJ-221	CER.CAPACITOR	220P	50V

Symbol No.	Part No.	Part Name	Description	
C324	NCS21HJ-221	CER.CAPACITOR	220P	50V
C325	NCS21HJ-221	CER.CAPACITOR	220P	50V
C326	NCS21HJ-221	CER.CAPACITOR	220P	50V
C327	QFP42AJ-153	P.P.CAPACITOR	0.015	100V
C328	QFP42AJ-153	P.P.CAPACITOR	0.015	100V
C329	NCB21HK-103	CER.CAPACITOR	0.010	50V
C330	NCB21HK-103	CER.CAPACITOR	0.010	50V
C331	NCB21HK-103	CER.CAPACITOR	0.010	50V
C332	NCB21HK-103	CER.CAPACITOR	0.010	50V
C333	NCB21HK-103	CER.CAPACITOR	0.010	50V
C334	QEK61EM-476	E.CAPACITOR	47	25V
C335	NCB21HK-103	CER.CAPACITOR	0.010	50V
C336	QEK61EM-476	E.CAPACITOR	47	25V
C337	QETA1VM-107	E.CAPACITOR	100	35V
C338	NCB21HK-103	CER.CAPACITOR	0.010	50V
C339	QETA1VM-107	E.CAPACITOR	100	35V
C340	QETA1VM-107	E.CAPACITOR	100	35V
C401	QEK61HM-105	E.CAPACITOR	1.0	50V
C402	QEK61HM-105	E.CAPACITOR	1.0	50V
C403	NCS21HJ-101	CER.CAPACITOR	100P	50V
C404	NCS21HJ-101	CER.CAPACITOR	100P	50V
C405	QETA1EM-226	E.CAPACITOR	22	25V
C406	QETA1EM-226	E.CAPACITOR	22	25V
C407	QETA1EM-226	E.CAPACITOR	22	25V
C408	QETA1EM-226	E.CAPACITOR	22	25V
C409	QFN41HJ-272	MY.CAPACITOR	2700P	50V
C410	QFN41HJ-272	MY.CAPACITOR	2700P	50V
C411	QFN41HJ-102	MY.CAPACITOR	1000P	50V
C412	QFN41HJ-102	MY.CAPACITOR	1000P	50V
C413	QEK61HM-105	E.CAPACITOR	1.0	50V
C414	QEK61HM-105	E.CAPACITOR	1.0	50V
C415	QEK61HM-104	E.CAPACITOR	0.10	50V
C416	QEK61HM-104	E.CAPACITOR	0.10	50V
C417	QEK61EM-476	E.CAPACITOR	47	25V
C418	QEK61EM-476	E.CAPACITOR	47	25V
L1	PGZ02044-822	COIL	8200μ	
L2	PGZ02044-822	COIL	8200μ	
L3	YU41134-220	COIL	22μ	
L31	YU41134-3R9	COIL	3.9μ	
L32	YU41134-3R9	COIL	33μ	
L33	YU41134-330	COIL	33μ	
L34	YU41134-330	COIL	33μ	
L35	YU41134-330	COIL	33μ	
L36	YU41134-330	COIL	33μ	
TH1	ERT-D2FHL462S	THERMISTOR		
TH2	ERT-D2FHL462S	THERMISTOR		
TH31	ERT-D2FHL102S	THERMISTOR		
TH32	ERT-D2FHL102S	THERMISTOR		
CN1	PGZ02142-100	CONNECTOR	100PIN	
CN11	PU59555-3	CONNECTOR	3PIN	
CN12	PU59555-3	CONNECTOR	3PIN	
CN31	PU59555-4	CONNECTOR	4PIN	
TP1	SQMX001-001	TEST POINT		
TP2	SQMX001-001	TEST POINT		
TP3	SQMX001-001	TEST POINT		

6.12 DIG AUDIO BOARD ASSEMBLY LIST [2][1]

SLK1030-A3A [2][1]□□□□□□□

Symbol No.	Part No.	Part Name	Description
TP4	SQMX001-001	TEST POINT	
TP5	SQMX001-001	TEST POINT	
TP6	SQMX001-001	TEST POINT	
TP7	SQMX001-001	TEST POINT	
TP8	SQMX001-001	TEST POINT	
TP9	SQMX001-001	TEST POINT	
TP31	SQMX001-001	TEST POINT	
TP32	SQMX001-001	TEST POINT	
TP33	SQMX001-001	TEST POINT	
TP34	SQMX001-001	TEST POINT	
TP35	SQMX001-001	TEST POINT	
TP36	SQMX001-001	TEST POINT	
TP37	SQMX001-001	TEST POINT	
TP38	SQMX001-001	TEST POINT	
FL1	PU60206	LPF	
FL2	PU60206	LPF	
T1	PGZ01859	TRANSFORMER	
T2	PGZ01859	TRANSFORMER	
TB1	SQMX002-001	TERMINAL	
TB2	SQMX002-001	TERMINAL	
TB3	SQMX002-001	TERMINAL	
TB4	SQMX002-001	TERMINAL	
SL1	PRD20531	SHIELD CASE	
SC1	DPSP2606Z	SCREW	M2.6×6
SP1	PGZ01128-02	SPACER	

Symbol No.	Part No.	Part Name	Description
IC1	UPC78L05T	I.C.(M)	NEC
IC2	PCM1710U(G)	I.C.(M)	BAR BRAWN
IC3	UPC78L12T	I.C.(M)	NEC
IC4	NJM79L12UA	I.C.(M)	JRC
IC5	M5218AFP	I.C.(M)	MITSUBISHI
IC7	M5201FP	I.C.(M)	MITSUBISHI
IC8	M5201FP	I.C.(M)	MITSUBISHI
IC9	UPC78L05T	I.C.(M)	NEC
IC10	AK5340-VS	I.C.(M)	ASAHIKASEI
IC11	M5218AFP	I.C.(M)	MITSUBISHI
IC12	M5218AFP	I.C.(M)	MITSUBISHI
IC13	TC74HC04AF	I.C.(M)	TOSHIBA
IC14	TC74HC74AF	I.C.(M)	TOSHIBA
IC15	TC74HC161AF	I.C.(M)	TOSHIBA
IC16	TC74HC161AF	I.C.(M)	TOSHIBA
IC17	TC74HC04AF	I.C.(M)	TOSHIBA
IC21	UPD78P054GC-101	I.C.(M)	NEC
IC22	BR24C01AF	I.C.(M)	ROHM
IC23	M62353GP	I.C.(M)	MITSUBISHI
IC24	BA10358F	I.C.(M)	ROHM
IC25	UPC78L12T	I.C.(M)	NEC
IC26	TC4051BF	I.C.(M)	TOSHIBA
IC27	M5218AFP	I.C.(M)	MITSUBISHI
IC28	M5218AFP	I.C.(M)	MITSUBISHI
IC32	TC74VHCT541F	I.C.(M)	TOSHIBA
IC33	TC74HC04AF	I.C.(M)	TOSHIBA
IC34	UPD485505G-35	I.C.(M)	NEC
IC35	TC74HC74AF	I.C.(M)	TOSHIBA
IC36	TC74HC74AF	I.C.(M)	TOSHIBA
IC37	UPD6383GF	I.C.(M)	NEC
IC38	TC74HC4053AF	I.C.(M)	TOSHIBA
IC39	TC74HC4053AF	I.C.(M)	TOSHIBA
IC40	HM514260CTT-8	I.C.(M)	HITACHI
IC41	SN74LS04NS	I.C.(M)	TEXAS
IC42	TC74HC04AF	I.C.(M)	TOSHIBA
IC43	TC74HC04AF	I.C.(M)	TOSHIBA
IC44	TC74HC04AF	I.C.(M)	TOSHIBA
IC46	TC74HC590AF	I.C.(M)	TOSHIBA
IC47	TC74HC161AF	I.C.(M)	TOSHIBA
IC48	MM74HC4046M	I.C.(M)	NS
IC49	BA10358F	I.C.(M)	ROHM
IC50	TC74HC04AF	I.C.(M)	TOSHIBA
IC51	TC74HC4053AF	I.C.(M)	TOSHIBA
IC53	TC74HC74AF	I.C.(M)	TOSHIBA
IC54	TC74LCX244F	I.C.(M)	TOSHIBA
IC101	UPC78L05T	I.C.(M)	NEC
IC102	AK5340-VS	I.C.(M)	ASAHIKASEI
IC103	M5201FP	I.C.(M)	MITSUBISHI
IC104	M5201FP	I.C.(M)	MITSUBISHI
IC105	M5201FP	I.C.(M)	MITSUBISHI
IC106	M5201FP	I.C.(M)	MITSUBISHI
IC107	M5218AFP	I.C.(M)	MITSUBISHI
IC108	M5218AFP	I.C.(M)	MITSUBISHI
IC110	M5218AFP	I.C.(M)	MITSUBISHI
IC111	UPC78L05T	I.C.(M)	NEC
IC401	TC74VHCT541F	I.C.(M)	TOSHIBA
IC501	M62353GP	I.C.(M)	MITSUBISHI

[DIG AUDIO]

Symbol No.	Part No.	Part Name	Description
Q1	2SA1037K	TRANSISTOR	ROHM
Q2	DTA124EK	TRANSISTOR	ROHM
Q3	DTC124EK	TRANSISTOR	ROHM
Q4	DTC124EK	TRANSISTOR	ROHM
Q11	DTC124EK	TRANSISTOR	ROHM
Q12	DTC124EK	TRANSISTOR	ROHM
Q13	DTC124EK	TRANSISTOR	ROHM
Q14	DTC124EK	TRANSISTOR	ROHM
Q15	DTC124EK	TRANSISTOR	ROHM
Q16	2SC2412K(QR)	TRANSISTOR	ROHM
Q17	2SB1030RS	TRANSISTOR	MATSUSHITA
Q18	DTC124EK	TRANSISTOR	ROHM
Q19	DTA124EK	TRANSISTOR	ROHM
Q20	DTC124EK	TRANSISTOR	ROHM
Q21	DTA124EK	TRANSISTOR	ROHM
Q22	DTC124EK	TRANSISTOR	ROHM
Q23	2SC2412K(QR)	TRANSISTOR	ROHM
Q101	2SC2412K(QR)	TRANSISTOR	ROHM
Q102	2SA1037K	TRANSISTOR	ROHM
Q103	DTC124EK	TRANSISTOR	ROHM
Q104	DTC124EK	TRANSISTOR	ROHM
Q105	DTC124EK	TRANSISTOR	ROHM
Q106	DTC124EK	TRANSISTOR	ROHM
D1	DA204K	DIODE	ROHM
D2	DA204K	DIODE	ROHM
D3	DA204K	DIODE	ROHM
D4	DA204K	DIODE	ROHM
D11	DA204K	DIODE	ROHM
D12	DA204K	DIODE	ROHM
D13	MA3043(M)	ZENER DIODE	MATSUSHITA
D14	DA204K	DIODE	ROHM
D15	DA204K	DIODE	ROHM
D16	DA204K	DIODE	ROHM
D101	MA3047(M)	ZENER DIODE	MATSUSHITA
D102	DA204K	DIODE	ROHM
D103	DA204K	DIODE	ROHM
R1	NRSA63J-122	M.G.RESISTOR	1.2K 1/16W
R2	NRSA63J-103	M.G.RESISTOR	10K 1/16W
R3	NRSA63J-0R0	M.G.RESISTOR	0 1/16W
R4	NRSA63J-104	M.G.RESISTOR	100K 1/16W
R5	NRSA63J-823	M.G.RESISTOR	82K 1/16W
R6	NRSA63J-823	M.G.RESISTOR	82K 1/16W
R7	NRSA63J-103	M.G.RESISTOR	10K 1/16W
R8	NRSA63J-103	M.G.RESISTOR	10K 1/16W
R9	NRSA63J-822	M.G.RESISTOR	8.2K 1/16W
R10	NRSA63J-822	M.G.RESISTOR	8.2K 1/16W
R11	NRSA63J-822	M.G.RESISTOR	8.2K 1/16W
R12	NRSA63J-822	M.G.RESISTOR	8.2K 1/16W
R13	NRSA63J-473	M.G.RESISTOR	47K 1/16W
R14	NRSA63J-473	M.G.RESISTOR	47K 1/16W
R15	NRSA63J-103	M.G.RESISTOR	10K 1/16W
R16	NRSA63J-103	M.G.RESISTOR	10K 1/16W
R17	NRSA63J-472	M.G.RESISTOR	4.7K 1/16W
R18	NRSA63J-472	M.G.RESISTOR	4.7K 1/16W
R19	NRSA63J-103	M.G.RESISTOR	10K 1/16W
R20	NRSA63J-103	M.G.RESISTOR	10K 1/16W

Symbol No.	Part No.	Part Name	Description
R21	NRSA63J-103	M.G.RESISTOR	10K 1/16W
R22	NRSA63J-103	M.G.RESISTOR	10K 1/16W
R23	NRSA63J-472	M.G.RESISTOR	4.7K 1/16W
R24	NRSA63J-472	M.G.RESISTOR	4.7K 1/16W
R25	NRSA63J-912	M.G.RESISTOR	9.1K 1/16W
R26	NRSA63J-912	M.G.RESISTOR	9.1K 1/16W
R27	NRSA63J-182	M.G.RESISTOR	1.8K 1/16W
R28	NRSA63J-182	M.G.RESISTOR	1.8K 1/16W
R29	NRSA63J-103	M.G.RESISTOR	10K 1/16W
R30	NRSA63J-103	M.G.RESISTOR	10K 1/16W
R31	NRSA63J-103	M.G.RESISTOR	10K 1/16W
R32	NRSA63J-103	M.G.RESISTOR	10K 1/16W
R33	NRSA63J-331	M.G.RESISTOR	330 1/16W
R34	NRSA63J-331	M.G.RESISTOR	330 1/16W
R35	NRSA63J-331	M.G.RESISTOR	330 1/16W
R36	NRSA63J-331	M.G.RESISTOR	330 1/16W
R37	NRSA63J-0R0	M.G.RESISTOR	0 1/16W
R38	NRSA63J-0R0	M.G.RESISTOR	0 1/16W
R39	NRSA63J-0R0	M.G.RESISTOR	0 1/16W
R40	NRSA63J-223	M.G.RESISTOR	22K 1/16W
R41	NRSA63J-0R0	M.G.RESISTOR	0 1/16W
R42	NRSA63J-0R0	M.G.RESISTOR	0 1/16W
R43	NRSA63J-0R0	M.G.RESISTOR	0 1/16W
R44	NRSA63J-0R0	M.G.RESISTOR	0 1/16W
R45	NRSA63J-103	M.G.RESISTOR	10K 1/16W
R46	NRSA63J-222	M.G.RESISTOR	2.2K 1/16W
R47	NRSA63J-221	M.G.RESISTOR	220 1/16W
R48	NRSA63J-101	M.G.RESISTOR	100 1/16W
R49	NRSA63J-0R0	M.G.RESISTOR	0 1/16W
R50	NRSA63J-0R0	M.G.RESISTOR	0 1/16W
R51	NRSA63J-0R0	M.G.RESISTOR	0 1/16W
R52	NRSA63J-101	M.G.RESISTOR	100 1/16W
R53	NRSA63J-102	M.G.RESISTOR	1.0K 1/16W
R54	NRSA63J-101	M.G.RESISTOR	100 1/16W
R55	NRSA63J-823	M.G.RESISTOR	82K 1/16W
R56	NRSA63J-823	M.G.RESISTOR	82K 1/16W
R57	NRSA63J-0R0	M.G.RESISTOR	0 1/16W
R58	NRSA63J-103	M.G.RESISTOR	10K 1/16W
R61	NRSA63J-0R0	M.G.RESISTOR	0 1/16W
R62	NRSA63J-101	M.G.RESISTOR	100 1/16W
R101	NRSA63J-0R0	M.G.RESISTOR	0 1/16W
R102	NRSA63J-151	M.G.RESISTOR	150 1/16W
R103	NRSA63J-105	M.G.RESISTOR	1.0M 1/16W
R104	NRSA63J-101	M.G.RESISTOR	100 1/16W
R105	NRSA63J-101	M.G.RESISTOR	100 1/16W
R106	NRSA63J-101	M.G.RESISTOR	100 1/16W
R107	NRSA63J-101	M.G.RESISTOR	100 1/16W
R108	NRSA63J-101	M.G.RESISTOR	100 1/16W
R109	NRSA63J-101	M.G.RESISTOR	100 1/16W
R110	NRSA63J-101	M.G.RESISTOR	100 1/16W
R111	NRSA63J-101	M.G.RESISTOR	100 1/16W
R112	NRSA63J-101	M.G.RESISTOR	100 1/16W
R113	NRSA63J-101	M.G.RESISTOR	100 1/16W
R114	NRSA63J-101	M.G.RESISTOR	100 1/16W
R115	NRSA63J-101	M.G.RESISTOR	100 1/16W
R116	NRSA63J-101	M.G.RESISTOR	100 1/16W
R117	NRSA63J-101	M.G.RESISTOR	100 1/16W
R118	NRSA63J-101	M.G.RESISTOR	100 1/16W
R119	NRSA63J-333	M.G.RESISTOR	33K 1/16W
R120	NRSA63J-103	M.G.RESISTOR	10K 1/16W

Symbol No.	Part No.	Part Name	Description	
R121	NRSA63J-103	M.G.RESISTOR	10K	1/16W
R122	NRSA63J-102	M.G.RESISTOR	1.0K	1/16W
R123	NRSA63J-102	M.G.RESISTOR	1.0K	1/16W
R124	NRSA63J-102	M.G.RESISTOR	1.0K	1/16W
R125	NRSA63J-102	M.G.RESISTOR	1.0K	1/16W
R126	NRSA63J-221	M.G.RESISTOR	220	1/16W
R127	NRSA63J-221	M.G.RESISTOR	220	1/16W
R128	NRSA63J-472	M.G.RESISTOR	4.7K	1/16W
R129	NRSA63J-103	M.G.RESISTOR	10K	1/16W
R130	NRSA63J-103	M.G.RESISTOR	10K	1/16W
R131	NRSA63J-222	M.G.RESISTOR	2.2K	1/16W
R132	NRSA63J-222	M.G.RESISTOR	2.2K	1/16W
R133	NRSA63J-102	M.G.RESISTOR	1.0K	1/16W
R134	NRSA63J-102	M.G.RESISTOR	1.0K	1/16W
R135	NRSA63J-101	M.G.RESISTOR	100	1/16W
R136	NRSA63J-101	M.G.RESISTOR	100	1/16W
R137	NRSA63J-101	M.G.RESISTOR	100	1/16W
R138	NRSA63J-101	M.G.RESISTOR	100	1/16W
R139	NRSA63J-101	M.G.RESISTOR	100	1/16W
R140	NRSA63J-101	M.G.RESISTOR	100	1/16W
R141	NRSA63J-101	M.G.RESISTOR	100	1/16W
R142	NRSA63J-101	M.G.RESISTOR	100	1/16W
R143	NRSA63J-102	M.G.RESISTOR	1.0K	1/16W
R144	NRSA63J-103	M.G.RESISTOR	10K	1/16W
R145	NRSA63J-103	M.G.RESISTOR	10K	1/16W
R146	NRSA63J-102	M.G.RESISTOR	1.0K	1/16W
R147	NRSA63J-102	M.G.RESISTOR	1.0K	1/16W
R148	NRSA63J-0R0	M.G.RESISTOR	0	1/16W
R149	NRSA63J-0R0	M.G.RESISTOR	0	1/16W
R150	NRSA63J-0R0	M.G.RESISTOR	0	1/16W
R151	NRSA63J-0R0	M.G.RESISTOR	0	1/16W
R152	NRSA63J-0R0	M.G.RESISTOR	0	1/16W
R153	NRSA63J-0R0	M.G.RESISTOR	0	1/16W
R154	NRSA63J-101	M.G.RESISTOR	100	1/16W
R155	NRSA63J-101	M.G.RESISTOR	100	1/16W
R156	NRSA63J-101	M.G.RESISTOR	100	1/16W
R157	NRSA63J-101	M.G.RESISTOR	100	1/16W
R158	NRSA63J-101	M.G.RESISTOR	100	1/16W
R159	NRSA63J-101	M.G.RESISTOR	100	1/16W
R160	NRSA63J-101	M.G.RESISTOR	100	1/16W
R161	NRSA63J-0R0	M.G.RESISTOR	0	1/16W
R162	NRSA63J-823	M.G.RESISTOR	82K	1/16W
R163	NRSA63J-823	M.G.RESISTOR	82K	1/16W
R164	NRSA63J-823	M.G.RESISTOR	82K	1/16W
R165	NRSA63J-823	M.G.RESISTOR	82K	1/16W
R166	NRVA63D-123	M.F.RESISTOR	12K	1/16W
R167	NRVA63D-102	M.F.RESISTOR	1.0K	1/16W
R168	NRVA63D-101	M.F.RESISTOR	100	1/16W
R169	NRVA63D-392	M.F.RESISTOR	3.9K	1/16W
R170	NRVA63D-391	M.F.RESISTOR	390	1/16W
R171	NRVA63D-563	M.F.RESISTOR	56K	1/16W
R172	NRVA63D-223	M.F.RESISTOR	22K	1/16W
R173	NRVA63D-223	M.F.RESISTOR	22K	1/16W
R174	NRVA63D-104	M.F.RESISTOR	100K	1/16W
R175	NRSA63J-224	M.G.RESISTOR	220K	1/16W
R176	NRSA63J-224	M.G.RESISTOR	220K	1/16W
R177	NRVA63D-393	M.F.RESISTOR	39K	1/16W
R178	NRVA63D-393	M.F.RESISTOR	39K	1/16W
R179	NRVA63D-393	M.F.RESISTOR	39K	1/16W
R180	NRVA63D-393	M.F.RESISTOR	39K	1/16W

Symbol No.	Part No.	Part Name	Description	
R181	NRVA63D-393	M.F.RESISTOR	39K	1/16W
R182	NRVA63D-393	M.F.RESISTOR	39K	1/16W
R183	NRVA63D-393	M.F.RESISTOR	39K	1/16W
R184	NRVA63D-103	M.F.RESISTOR	10K	1/16W
R185	NRSA63J-104	M.G.RESISTOR	100K	1/16W
R186	NRSA63J-103	M.G.RESISTOR	10K	1/16W
R187	NRSA63J-103	M.G.RESISTOR	10K	1/16W
R188	NRSA63J-0R0	M.G.RESISTOR	0	1/16W
R189	NRSA63J-101	M.G.RESISTOR	100	1/16W
R190	NRSA63J-222	M.G.RESISTOR	2.2K	1/16W
R191	NRSA63J-222	M.G.RESISTOR	2.2K	1/16W
R192	NRSA63J-222	M.G.RESISTOR	2.2K	1/16W
R193	NRSA63J-101	M.G.RESISTOR	100	1/16W
R194	NRSA63J-222	M.G.RESISTOR	2.2K	1/16W
R195	NRSA63J-101	M.G.RESISTOR	100	1/16W
R201	NRSA63J-103	M.G.RESISTOR	10K	1/16W
R202	NRSA63J-103	M.G.RESISTOR	10K	1/16W
R203	NRSA63J-101	M.G.RESISTOR	100	1/16W
R204	NRSA63J-101	M.G.RESISTOR	100	1/16W
R205	NRSA63J-103	M.G.RESISTOR	10K	1/16W
R206	NRSA63J-103	M.G.RESISTOR	10K	1/16W
R207	NRSA63J-101	M.G.RESISTOR	100	1/16W
R208	NRSA63J-101	M.G.RESISTOR	100	1/16W
R214	NRSA63J-101	M.G.RESISTOR	100	1/16W
R215	NRSA63J-101	M.G.RESISTOR	100	1/16W
R216	NRSA63J-101	M.G.RESISTOR	100	1/16W
R217	NRSA63J-0R0	M.G.RESISTOR	0	1/16W
R218	NRSA63J-0R0	M.G.RESISTOR	0	1/16W
R219	NRSA63J-0R0	M.G.RESISTOR	0	1/16W
R220	NRSA63J-101	M.G.RESISTOR	100	1/16W
R221	NRSA63J-0R0	M.G.RESISTOR	0	1/16W
R222	NRSA63J-101	M.G.RESISTOR	100	1/16W
R223	NRSA63J-0R0	M.G.RESISTOR	0	1/16W
R224	NRSA63J-101	M.G.RESISTOR	100	1/16W
R225	NRSA63J-101	M.G.RESISTOR	100	1/16W
R226	NRSA63J-101	M.G.RESISTOR	100	1/16W
R227	NRSA63J-391	M.G.RESISTOR	390	1/16W
R228	NRSA63J-101	M.G.RESISTOR	100	1/16W
R229	NRSA63J-101	M.G.RESISTOR	100	1/16W
R230	NRSA63J-101	M.G.RESISTOR	100	1/16W
R231	NRSA63J-101	M.G.RESISTOR	100	1/16W
R232	NRSA63J-391	M.G.RESISTOR	390	1/16W
R233	NRSA63J-103	M.G.RESISTOR	10K	1/16W
R234	NRSA63J-103	M.G.RESISTOR	10K	1/16W
R235	NRSA63J-103	M.G.RESISTOR	10K	1/16W
R236	NRSA63J-103	M.G.RESISTOR	10K	1/16W
R237	NRSA63J-103	M.G.RESISTOR	10K	1/16W
R238	NRSA63J-103	M.G.RESISTOR	10K	1/16W
R239	NRSA63J-103	M.G.RESISTOR	10K	1/16W
R240	NRSA63J-103	M.G.RESISTOR	10K	1/16W
R241	NRSA63J-103	M.G.RESISTOR	10K	1/16W
R242	NRSA63J-101	M.G.RESISTOR	100	1/16W
R243	NRSA63J-101	M.G.RESISTOR	100	1/16W
R244	NRSA63J-181	M.G.RESISTOR	180	1/16W
R245	NRSA63J-101	M.G.RESISTOR	100	1/16W
R246	NRSA63J-101	M.G.RESISTOR	100	1/16W
R247	NRSA63J-0R0	M.G.RESISTOR	0	1/16W
R248	NRSA63J-101	M.G.RESISTOR	100	1/16W
R249	NRSA63J-101	M.G.RESISTOR	100	1/16W
R251	NRSA63J-0R0	M.G.RESISTOR	0	1/16W

[DIG AUDIO]

Symbol No.	Part No.	Part Name	Description	
R254	NRSA63J-102	M.G.RESISTOR	1.0K	1/16W
R255	NRSA63J-331	M.G.RESISTOR	330	1/16W
R256	NRSA63J-101	M.G.RESISTOR	100	1/16W
R257	NRSA63J-102	M.G.RESISTOR	1.0K	1/16W
R258	NRSA63J-102	M.G.RESISTOR	1.0K	1/16W
R259	NRSA63J-683	M.G.RESISTOR	68K	1/16W
R260	NRSA63J-332	M.G.RESISTOR	3.3K	1/16W
R261	NRSA63J-102	M.G.RESISTOR	1.0K	1/16W
R262	NRSA63J-563	M.G.RESISTOR	56K	1/16W
R263	NRSA63J-124	M.G.RESISTOR	120K	1/16W
R264	NRSA63J-102	M.G.RESISTOR	1.0K	1/16W
R265	NRSA63J-102	M.G.RESISTOR	1.0K	1/16W
R267	NRSA63J-0R0	M.G.RESISTOR	0	1/16W
R271	NRSA63J-472	M.G.RESISTOR	4.7K	1/16W
R272	NRSA63J-472	M.G.RESISTOR	4.7K	1/16W
R273	NRSA63J-472	M.G.RESISTOR	4.7K	1/16W
R291	NRSA63J-101	M.G.RESISTOR	100	1/16W
R292	NRSA63J-101	M.G.RESISTOR	100	1/16W
R293	NRSA63J-564	M.G.RESISTOR	560K	1/16W
R294	NRSA63J-102	M.G.RESISTOR	1.0K	1/16W
R295	NRSA63J-0R0	M.G.RESISTOR	0	1/16W
R296	NRSA63J-0R0	M.G.RESISTOR	0	1/16W
R301	NRSA63J-472	M.G.RESISTOR	4.7K	1/16W
R302	NRSA63J-472	M.G.RESISTOR	4.7K	1/16W
R303	NRSA63J-472	M.G.RESISTOR	4.7K	1/16W
R304	NRSA63J-472	M.G.RESISTOR	4.7K	1/16W
R305	NRSA63J-104	M.G.RESISTOR	100K	1/16W
R306	NRSA63J-104	M.G.RESISTOR	100K	1/16W
R307	NRVA63D-122	M.F.RESISTOR	1.2K	1/16W
R308	NRVA63D-122	M.F.RESISTOR	1.2K	1/16W
R309	NRVA63D-221	M.F.RESISTOR	220	1/16W
R310	NRVA63D-221	M.F.RESISTOR	220	1/16W
R311	NRVA63D-332	M.F.RESISTOR	3.3K	1/16W
R312	NRVA63D-332	M.F.RESISTOR	3.3K	1/16W
R313	NRVA63D-222	M.F.RESISTOR	2.2K	1/16W
R314	NRVA63D-222	M.F.RESISTOR	2.2K	1/16W
R315	NRSA63J-0R0	M.G.RESISTOR	0	1/16W
R316	NRSA63J-0R0	M.G.RESISTOR	0	1/16W
R317	NRSA63J-473	M.G.RESISTOR	47K	1/16W
R318	NRSA63J-473	M.G.RESISTOR	47K	1/16W
R319	NRSA63J-103	M.G.RESISTOR	10K	1/16W
R320	NRSA63J-103	M.G.RESISTOR	10K	1/16W
R321	NRSA63J-103	M.G.RESISTOR	10K	1/16W
R322	NRSA63J-103	M.G.RESISTOR	10K	1/16W
R323	NRSA63J-392	M.G.RESISTOR	3.9K	1/16W
R324	NRSA63J-392	M.G.RESISTOR	3.9K	1/16W
R325	NRSA63J-472	M.G.RESISTOR	4.7K	1/16W
R326	NRSA63J-472	M.G.RESISTOR	4.7K	1/16W
R327	NRSA63J-103	M.G.RESISTOR	10K	1/16W
R328	NRSA63J-103	M.G.RESISTOR	10K	1/16W
R329	NRSA63J-472	M.G.RESISTOR	4.7K	1/16W
R330	NRSA63J-472	M.G.RESISTOR	4.7K	1/16W
R331	NRSA63J-473	M.G.RESISTOR	47K	1/16W
R332	NRSA63J-473	M.G.RESISTOR	47K	1/16W
R333	NRSA63J-103	M.G.RESISTOR	10K	1/16W
R334	NRSA63J-103	M.G.RESISTOR	10K	1/16W
R335	NRSA63J-103	M.G.RESISTOR	10K	1/16W
R336	NRSA63J-103	M.G.RESISTOR	10K	1/16W
R337	NRSA63J-331	M.G.RESISTOR	330	1/16W
R338	NRSA63J-331	M.G.RESISTOR	330	1/16W

Symbol No.	Part No.	Part Name	Description	
R339	NRSA63J-331	M.G.RESISTOR	330	1/16W
R340	NRSA63J-331	M.G.RESISTOR	330	1/16W
R341	NRSA63J-0R0	M.G.RESISTOR	0	1/16W
R342	NRSA63J-0R0	M.G.RESISTOR	0	1/16W
R343	NRSA63J-0R0	M.G.RESISTOR	0	1/16W
R344	NRSA63J-223	M.G.RESISTOR	22K	1/16W
R345	NRSA63J-101	M.G.RESISTOR	100	1/16W
R347	NRSA63J-152	M.G.RESISTOR	1.5K	1/16W
R348	NRSA63J-152	M.G.RESISTOR	1.5K	1/16W
R349	NRSA63J-472	M.G.RESISTOR	4.7K	1/16W
R350	NRSA63J-472	M.G.RESISTOR	4.7K	1/16W
R351	NRSA63J-332	M.G.RESISTOR	3.3K	1/16W
R352	NRSA63J-332	M.G.RESISTOR	3.3K	1/16W
R353	NRSA63J-472	M.G.RESISTOR	4.7K	1/16W
R354	NRSA63J-472	M.G.RESISTOR	4.7K	1/16W
R355	NRSA63J-222	M.G.RESISTOR	2.2K	1/16W
R356	NRSA63J-222	M.G.RESISTOR	2.2K	1/16W
R401	NRSA63J-0R0	M.G.RESISTOR	0	1/16W
R405	NRSA63J-103	M.G.RESISTOR	10K	1/16W
R501	NRSA63J-101	M.G.RESISTOR	100	1/16W
R502	NRSA63J-101	M.G.RESISTOR	100	1/16W
R503	NRSA63J-101	M.G.RESISTOR	100	1/16W
R946	NRSA63J-473	M.G.RESISTOR	47K	1/16W
C1	NCF31CZ-104	CER.CAPACITOR	0.10	16V
C2	NEH91CM-476	E.CAPACITOR	47	16V
C3	NCF31CZ-104	CER.CAPACITOR	0.10	16V
C4	NEH91EM-336	E.CAPACITOR	33	25V
C5	NEH71EM-107	E.CAPACITOR	100	25V
C6	NEH71EM-107	E.CAPACITOR	100	25V
C7	NCF31CZ-104	CER.CAPACITOR	0.10	16V
C8	NEH91CM-476	E.CAPACITOR	47	16V
C9	NCF31CZ-104	CER.CAPACITOR	0.10	16V
C10	NEF11CM-106	TAN.CAPACITOR	10	16V
C11	NEF11CM-226	TAN.CAPACITOR	22	16V
C12	NCF31CZ-104	CER.CAPACITOR	0.10	16V
C13	NCF31CZ-104	CER.CAPACITOR	0.10	16V
C14	NEH91CM-106	E.CAPACITOR	10	16V
C15	NCF31CZ-104	CER.CAPACITOR	0.10	16V
C16	NEH91CM-106	E.CAPACITOR	10	16V
C17	NCF31CZ-104	CER.CAPACITOR	0.10	16V
C18	NEH91CM-106	E.CAPACITOR	10	16V
C19	NCF31CZ-104	CER.CAPACITOR	0.10	16V
C20	NEH91CM-106	E.CAPACITOR	10	16V
C21	NEH91CM-106	E.CAPACITOR	10	16V
C22	NEH91CM-106	E.CAPACITOR	10	16V
C23	NEH91CM-106	E.CAPACITOR	10	16V
C24	NEH91CM-106	E.CAPACITOR	10	16V
C25	NEH91CM-476	E.CAPACITOR	47	16V
C26	NCF31CZ-104	CER.CAPACITOR	0.10	16V
C27	NEH91EM-336	E.CAPACITOR	33	25V
C28	NEF11EM-106	TAN.CAPACITOR	10	25V
C29	NCF31CZ-104	CER.CAPACITOR	0.10	16V
C30	NCF31CZ-104	CER.CAPACITOR	0.10	16V
C31	NEH91EM-336	E.CAPACITOR	33	25V
C32	NEF11EM-106	TAN.CAPACITOR	10	25V
C33	NCF31CZ-104	CER.CAPACITOR	0.10	16V
C34	NCF31CZ-104	CER.CAPACITOR	0.10	16V
C35	NEH91CM-476	E.CAPACITOR	47	16V

Symbol No.	Part No.	Part Name	Description	
C36	NEH91CM-476	E.CAPACITOR	47	16V
C37	NEH91CM-476	E.CAPACITOR	47	16V
C38	NEH91CM-476	E.CAPACITOR	47	16V
C39	NFV41HJ-102	FILM CAPACITOR	1000P	50V
C40	NFV41HJ-102	FILM CAPACITOR	1000P	50V
C41	NCS31HJ-680	CER.CAPACITOR	68P	50V
C42	NCS31HJ-680	CER.CAPACITOR	68P	50V
C43	NEH91CM-106	E.CAPACITOR	10	16V
C44	NEH91CM-106	E.CAPACITOR	10	16V
C45	NCF31CZ-104	CER.CAPACITOR	0.10	16V
C46	NEF11CM-106	TAN.CAPACITOR	10	16V
C47	NEF11CM-226	TAN.CAPACITOR	22	16V
C48	NCF31CZ-104	CER.CAPACITOR	0.10	16V
C49	NCF31CZ-104	CER.CAPACITOR	0.10	16V
C50	NEH91CM-106	E.CAPACITOR	10	16V
C51	NEH91CM-106	E.CAPACITOR	10	16V
C52	NEH91CM-106	E.CAPACITOR	10	16V
C53	NCF31CZ-104	CER.CAPACITOR	0.10	16V
C54	NCF31CZ-104	CER.CAPACITOR	0.10	16V
C55	NFV41HJ-152	FILM CAPACITOR	1500P	50V
C56	NFV41HJ-152	FILM CAPACITOR	1500P	50V
C57	NCF31CZ-104	CER.CAPACITOR	0.10	16V
C58	NEH91CM-106	E.CAPACITOR	10	16V
C59	NCF31CZ-104	CER.CAPACITOR	0.10	16V
C60	NEH91CM-106	E.CAPACITOR	10	16V
C61	NCF31CZ-104	CER.CAPACITOR	0.10	16V
C62	NCF31CZ-104	CER.CAPACITOR	0.10	16V
C63	NEH91CM-106	E.CAPACITOR	10	16V
C64	NCF31CZ-104	CER.CAPACITOR	0.10	16V
C65	NCF31CZ-104	CER.CAPACITOR	0.10	16V
C66	NCF31CZ-104	CER.CAPACITOR	0.10	16V
C67	NEH91CM-106	E.CAPACITOR	10	16V
C68	NEH91CM-106	E.CAPACITOR	10	16V
C69	NCF31CZ-104	CER.CAPACITOR	0.10	16V
C70	NCF31CZ-104	CER.CAPACITOR	0.10	16V
C71	NCF31CZ-104	CER.CAPACITOR	0.10	16V
C73	NCB31HK-103	CER.CAPACITOR	0.010	50V
C74	NCB31HK-103	CER.CAPACITOR	0.010	50V
C78	NCF31CZ-104	CER.CAPACITOR	0.10	16V
C79	NCF31CZ-104	CER.CAPACITOR	0.10	16V
C80	NCF31CZ-104	CER.CAPACITOR	0.10	16V
C93	NCB31HK-103	CER.CAPACITOR	0.010	50V
C101	NCF31CZ-104	CER.CAPACITOR	0.10	16V
C102	NEH91CM-476	E.CAPACITOR	47	16V
C103	NCF31CZ-104	CER.CAPACITOR	0.10	16V
C104	NCS31HJ-220	CER.CAPACITOR	22P	50V
C105	NCS31HJ-220	CER.CAPACITOR	22P	50V
C106	NCF31CZ-104	CER.CAPACITOR	0.10	16V
C107	NEH91CM-476	E.CAPACITOR	47	16V
C108	NCF31CZ-104	CER.CAPACITOR	0.10	16V
C109	NEH91CM-476	E.CAPACITOR	47	16V
C110	NEH91CM-106	E.CAPACITOR	10	16V
C111	NEH91CM-106	E.CAPACITOR	10	16V
C113	NEH91CM-106	E.CAPACITOR	10	16V
C114	NEH91CM-106	E.CAPACITOR	10	16V
C115	NEH91CM-106	E.CAPACITOR	10	16V
C116	NCF31CZ-104	CER.CAPACITOR	0.10	16V
C117	NEH91CM-106	E.CAPACITOR	10	16V
C118	NEH91CM-106	E.CAPACITOR	10	16V

Symbol No.	Part No.	Part Name	Description	
C119	NEH91CM-106	E.CAPACITOR	10	16V
C120	NEH91CM-106	E.CAPACITOR	10	16V
C121	NCB31HK-103	CER.CAPACITOR	0.010	50V
C122	NCS31HJ-221	CER.CAPACITOR	220P	50V
C123	NCS31HJ-101	CER.CAPACITOR	100P	50V
C124	NCF31CZ-104	CER.CAPACITOR	0.10	16V
C125	NCF31CZ-104	CER.CAPACITOR	0.10	16V
C126	NEH91EM-336	E.CAPACITOR	33	25V
C127	NEF11EM-106	TAN.CAPACITOR	10	25V
C128	NCF31CZ-104	CER.CAPACITOR	0.10	16V
C129	NCF31CZ-104	CER.CAPACITOR	0.10	16V
C130	NEH91CM-476	E.CAPACITOR	47	16V
C131	NEN21EM-106	NP.CAPACITOR	10	25V
C132	NEN21EM-106	NP.CAPACITOR	10	25V
C133	NEH91CM-476	E.CAPACITOR	47	16V
C134	NEH91CM-106	E.CAPACITOR	10	16V
C135	NCF31CZ-104	CER.CAPACITOR	0.10	16V
C136	NEN21EM-106	NP.CAPACITOR	10	25V
C137	NCF31CZ-104	CER.CAPACITOR	0.10	16V
C138	NEH91CM-476	E.CAPACITOR	47	16V
C139	NEH91CM-106	E.CAPACITOR	10	16V
C140	NCS31HJ-100	CER.CAPACITOR	10P	50V
C141	NEH91CM-476	E.CAPACITOR	47	16V
C142	NEH91CM-476	E.CAPACITOR	47	16V
C143	NCF31CZ-104	CER.CAPACITOR	0.10	16V
C144	NCF31CZ-104	CER.CAPACITOR	0.10	16V
C145	NCF31CZ-104	CER.CAPACITOR	0.10	16V
C146	NCF31CZ-104	CER.CAPACITOR	0.10	16V
C147	NCB31HK-272	CER.CAPACITOR	2700P	50V
C148	NEH91CM-106	E.CAPACITOR	10	16V
C149	NCF31CZ-104	CER.CAPACITOR	0.10	16V
C150	NCF31CZ-104	CER.CAPACITOR	0.10	16V
C201	NCB31HK-103	CER.CAPACITOR	0.010	50V
C202	NEH91CM-476	E.CAPACITOR	47	16V
C203	NCB31HK-103	CER.CAPACITOR	0.010	50V
C204	NCF31CZ-104	CER.CAPACITOR	0.10	16V
C205	NEH91CM-106	E.CAPACITOR	10	16V
C206	NCB31HK-103	CER.CAPACITOR	0.010	50V
C207	NCB31HK-103	CER.CAPACITOR	0.010	50V
C208	NCB31HK-103	CER.CAPACITOR	0.010	50V
C209	NCF31CZ-104	CER.CAPACITOR	0.10	16V
C210	NCF31CZ-104	CER.CAPACITOR	0.10	16V
C211	NCF31CZ-104	CER.CAPACITOR	0.10	16V
C212	NCF31CZ-104	CER.CAPACITOR	0.10	16V
C213	NCF31CZ-104	CER.CAPACITOR	0.10	16V
C214	NCF31CZ-104	CER.CAPACITOR	0.10	16V
C215	NCF31CZ-104	CER.CAPACITOR	0.10	16V
C216	NCF31CZ-104	CER.CAPACITOR	0.10	16V
C217	NCF31CZ-104	CER.CAPACITOR	0.10	16V
C218	NCF31CZ-104	CER.CAPACITOR	0.10	16V
C219	NCF31CZ-104	CER.CAPACITOR	0.10	16V
C220	NCB31HK-102	CER.CAPACITOR	1000P	50V
C221	NCF31CZ-104	CER.CAPACITOR	0.10	16V
C223	NCS31HJ-181	CER.CAPACITOR	180P	50V
C251	NCF31CZ-104	CER.CAPACITOR	0.10	16V
C252	NEH91CM-226	E.CAPACITOR	22	16V
C253	NCF31CZ-104	CER.CAPACITOR	0.10	16V
C254	NCB31HK-103	CER.CAPACITOR	0.010	50V
C255	NCF31CZ-104	CER.CAPACITOR	0.10	16V

[DIG AUDIO]

Symbol No.	Part No.	Part Name	Description	
C256	NCB31HK-103	CER.CAPACITOR	0.010	50V
C259	NCF31CZ-104	CER.CAPACITOR	0.10	16V
C260	NEH91CM-226	E.CAPACITOR	22	16V
C261	NCF31CZ-104	CER.CAPACITOR	0.10	16V
C262	NCF31CZ-104	CER.CAPACITOR	0.10	16V
C263	NCB31HK-103	CER.CAPACITOR	0.010	50V
C264	NCF31CZ-104	CER.CAPACITOR	0.10	16V
C265	NCF31CZ-104	CER.CAPACITOR	0.10	16V
C266	NCB31HK-103	CER.CAPACITOR	0.010	50V
C267	NEH91CM-226	E.CAPACITOR	22	16V
C268	NCF31CZ-104	CER.CAPACITOR	0.10	16V
C269	NCF31CZ-104	CER.CAPACITOR	0.10	16V
C270	NCF31CZ-104	CER.CAPACITOR	0.10	16V
C301	NCF31CZ-104	CER.CAPACITOR	0.10	16V
C302	NEF11CM-106	TAN.CAPACITOR	10	16V
C303	NEF11CM-226	TAN.CAPACITOR	22	16V
C304	NCF31CZ-104	CER.CAPACITOR	0.10	16V
C305	NEH91CM-106	E.CAPACITOR	10	16V
C306	NEH91CM-106	E.CAPACITOR	10	16V
C307	NEH91CM-106	E.CAPACITOR	10	16V
C308	NEH91CM-106	E.CAPACITOR	10	16V
C309	NFV41HJ-153	FILM CAPACITOR	0.015	50V
C310	NFV41HJ-153	FILM CAPACITOR	0.015	50V
C311	NEN21CM-475	NP.CAPACITOR	4.7	16V
C312	NEN21CM-475	NP.CAPACITOR	4.7	16V
C313	NEH91CM-476	E.CAPACITOR	47	16V
C314	NEH91CM-476	E.CAPACITOR	47	16V
C315	NEH91CM-106	E.CAPACITOR	10	16V
C316	NEH91CM-106	E.CAPACITOR	10	16V
C317	NEH91CM-476	E.CAPACITOR	47	16V
C318	NEH91CM-476	E.CAPACITOR	47	16V
C319	NEH91CM-106	E.CAPACITOR	10	16V
C320	NEH91CM-106	E.CAPACITOR	10	16V
C321	NFV41HJ-152	FILM CAPACITOR	1500P	50V
C322	NFV41HJ-152	FILM CAPACITOR	1500P	50V
C323	NEH91CM-106	E.CAPACITOR	10	16V
C324	NCF31CZ-104	CER.CAPACITOR	0.10	16V
C325	NCS31HJ-220	CER.CAPACITOR	22P	50V
C326	NCS31HJ-220	CER.CAPACITOR	22P	50V
C327	NCS31HJ-220	CER.CAPACITOR	22P	50V
C328	NCS31HJ-220	CER.CAPACITOR	22P	50V
C329	NCS31HJ-220	CER.CAPACITOR	22P	50V
C330	NCS31HJ-220	CER.CAPACITOR	22P	50V
C331	NCB31HK-103	CER.CAPACITOR	0.010	50V
C332	NCB31HK-103	CER.CAPACITOR	0.010	50V
C333	NCB31HK-103	CER.CAPACITOR	0.010	50V
C334	NCB31HK-103	CER.CAPACITOR	0.010	50V
C341	NEN21AM-106	NP.CAPACITOR	10	10V
C342	NEN21AM-106	NP.CAPACITOR	10	10V
C401	NCB31HK-103	CER.CAPACITOR	0.010	50V
L1	YU41135-101	COIL	100μ	
L2	YU41135-101	COIL	100μ	
L3	YU41135-101	COIL	100μ	
L9	YU41135-101	COIL	100μ	
LC1	PGZ01972	NOISE FILTER		
LC2	PGZ01972	NOISE FILTER		

Symbol No.	Part No.	Part Name	Description
LC3	PGZ01972	NOISE FILTER	
LC4	PGZ01972	NOISE FILTER	
LC5	PGZ01972	NOISE FILTER	
X1	PGZ02200-001	CRYSTAL	4.9152MHz
X2	SDV0026	IC(VCO)	
CN1	PGZ02142-120	CONNECTOR	120PIN
CN2	PGZ02142-100	CONNECTOR	100PIN
TP1	SCV1880-001	TEST POINT	
TP2	SCV1880-001	TEST POINT	
TP3	SCV1880-001	TEST POINT	
TP4	SCV1880-001	TEST POINT	
TP5	SCV1880-001	TEST POINT	
TP21	SCV1880-001	TEST POINT	
TP31	SCV1880-001	TEST POINT	
TP32	SCV1880-001	TEST POINT	
TP33	SCV1880-001	TEST POINT	
TP34	SCV1880-001	TEST POINT	
TP35	SCV1880-001	TEST POINT	
TP36	SCV1880-001	TEST POINT	
TP37	SCV1880-001	TEST POINT	
TP38	SCV1880-001	TEST POINT	
TP39	SCV1880-001	TEST POINT	
TP40	SCV1880-001	TEST POINT	
TP41	SCV1880-001	TEST POINT	
TP42	SCV1880-001	TEST POINT	
TP43	SCV1880-001	TEST POINT	
TP51	SCV1880-001	TEST POINT	
TP52	SCV1880-001	TEST POINT	
TP53	SCV1880-001	TEST POINT	
TP54	SCV1880-001	TEST POINT	
TP55	SCV1880-001	TEST POINT	
K1	PGZ01693-009	FERRATE BEADS	
TB1	PGZ02228	EARTH LUG	
TB2	PGZ02228	EARTH LUG	
TB3	PGZ02228	EARTH LUG	
TB4	PGZ02228	EARTH LUG	
TB5	SQMX002-001	TERMINAL	
TB6	SQMX002-001	TERMINAL	
SL1	PRD20530	SHIELD CASE	
SC1	DPSP2606Z	SCREW	M2.6×6
SP1	PGZ00582	SPACER	

6.13 AUDIO I/O BOARD ASSEMBLY LIST [2][2]

SLK1031-A3A [2][2][ ][ ][ ][ ][ ][ ]

Symbol No.	Part No.	Part Name	Description
IC1	M5220P	I.C.(M)	MITSUBISHI
IC2	M5220P	I.C.(M)	MITSUBISHI
IC3	M5220P	I.C.(M)	MITSUBISHI
IC4	M5220P	I.C.(M)	MITSUBISHI
IC5	M5201L	I.C.(M)	MITSUBISHI
IC6	M5201L	I.C.(M)	MITSUBISHI
IC7	M5283P	I.C.(M)	MITSUBISHI
IC8	M5283P	I.C.(M)	MITSUBISHI
IC9	UPC78N12H	I.C.(M)	NEC
IC10	UPC78N12H	I.C.(M)	NEC
IC11	UPC79N12H	I.C.(M)	NEC
IC12	UPC79N12H	I.C.(M)	NEC
IC13	M5201L	I.C.(M)	MITSUBISHI
IC16	M5201L	I.C.(M)	MITSUBISHI
IC17	M5218AP	I.C.(M)	MITSUBISHI
IC23	M5218AP	I.C.(M)	MITSUBISHI
IC101	M5283P	I.C.(M)	MITSUBISHI
IC102	M5283P	I.C.(M)	MITSUBISHI
IC103	M5201L	I.C.(M)	MITSUBISHI
IC104	M5201L	I.C.(M)	MITSUBISHI
IC105	M5218AP	I.C.(M)	MITSUBISHI
IC106	M5218AP	I.C.(M)	MITSUBISHI
IC107	M5220P	I.C.(M)	MITSUBISHI
IC108	M5220P	I.C.(M)	MITSUBISHI
IC109	M5220P	I.C.(M)	MITSUBISHI
IC110	M5220P	I.C.(M)	MITSUBISHI
Q1	DTC124ES	TRANSISTOR	ROHM
Q2	DTA124ES	TRANSISTOR	ROHM
Q11	2SD1994A(RS)	TRANSISTOR	MATSUSHITA
Q12	2SB1322A(RS)	TRANSISTOR	MATSUSHITA
Q101	2SA933S(QRS)	TRANSISTOR	ROHM
Q102	2SA933S(QRS)	TRANSISTOR	ROHM
Q103	2SC1741S(QR)	TRANSISTOR	ROHM
Q104	2SC1741S(QR)	TRANSISTOR	ROHM
Q105	2SD1253A	TRANSISTOR	MATSUSHITA
Q106	2SD1253A	TRANSISTOR	MATSUSHITA
Q107	2SB930A	TRANSISTOR	MATSUSHITA
Q108	2SB930A	TRANSISTOR	MATSUSHITA
Q109	2SA933S(QRS)	TRANSISTOR	ROHM
Q110	2SA933S(QRS)	TRANSISTOR	ROHM
Q111	2SC1741S(QR)	TRANSISTOR	ROHM
Q112	2SC1741S(QR)	TRANSISTOR	ROHM
Q113	2SD1253A	TRANSISTOR	MATSUSHITA
Q114	2SD1253A	TRANSISTOR	MATSUSHITA
Q115	2SB930A	TRANSISTOR	MATSUSHITA
Q116	2SB930A	TRANSISTOR	MATSUSHITA
Q117	DTC124ES	TRANSISTOR	ROHM
Q118	DTC124ES	TRANSISTOR	ROHM
Q120	DTC124ES	TRANSISTOR	ROHM
Q121	DTC124ES	TRANSISTOR	ROHM
Q122	2SC1741S(QR)	TRANSISTOR	ROHM
Q123	2SC1741S(QR)	TRANSISTOR	ROHM
Q124	2SC1741S(QR)	TRANSISTOR	ROHM
D1	ERA15-02	DIODE	FIJI ELECTRIC
D2	ERA15-02	DIODE	FIJI ELECTRIC
D3	1SS133	DIODE	ROHM

Symbol No.	Part No.	Part Name	Description	
R1	QRD161J-822	C.RESISTOR	8.2K	1/6W
R2	QRD161J-822	C.RESISTOR	8.2K	1/6W
R3	QRD161J-222	C.RESISTOR	2.2K	1/6W
R4	QRD161J-222	C.RESISTOR	2.2K	1/6W
R5	QRD161J-222	C.RESISTOR	2.2K	1/6W
R6	QRD161J-222	C.RESISTOR	2.2K	1/6W
R7	QRD161J-822	C.RESISTOR	8.2K	1/6W
R8	QRD161J-822	C.RESISTOR	8.2K	1/6W
R9	QRD161J-104	C.RESISTOR	100K	1/6W
R10	QRD161J-104	C.RESISTOR	100K	1/6W
R11	QRD161J-104	C.RESISTOR	100K	1/6W
R12	QRD161J-104	C.RESISTOR	100K	1/6W
R13	QRD161J-103	C.RESISTOR	10K	1/6W
R14	QRD161J-103	C.RESISTOR	10K	1/6W
R15	QRD161J-562	C.RESISTOR	5.6K	1/6W
R16	QRD161J-562	C.RESISTOR	5.6K	1/6W
R17	QRD161J-562	C.RESISTOR	5.6K	1/6W
R18	QRD161J-562	C.RESISTOR	5.6K	1/6W
R19	QRD161J-103	C.RESISTOR	10K	1/6W
R20	QRD161J-103	C.RESISTOR	10K	1/6W
R21	QRD161J-103	C.RESISTOR	10K	1/6W
R22	QRD161J-103	C.RESISTOR	10K	1/6W
R23	QRD161J-183	C.RESISTOR	18K	1/6W
R24	QRD161J-183	C.RESISTOR	18K	1/6W
R25	QRD161J-183	C.RESISTOR	18K	1/6W
R26	QRD161J-183	C.RESISTOR	18K	1/6W
R27	QRD161J-103	C.RESISTOR	10K	1/6W
R28	QRD161J-103	C.RESISTOR	10K	1/6W
R29	QRD161J-472	C.RESISTOR	4.7K	1/6W
R30	QRD161J-472	C.RESISTOR	4.7K	1/6W
R31	QRD161J-473	C.RESISTOR	47K	1/6W
R32	QRD161J-473	C.RESISTOR	47K	1/6W
R33	QRD161J-102	C.RESISTOR	1.0K	1/6W
R34	QRD161J-102	C.RESISTOR	1.0K	1/6W
R35	QRD161J-103	C.RESISTOR	10K	1/6W
R36	QRD161J-103	C.RESISTOR	10K	1/6W
R37	QRD161J-123	C.RESISTOR	12K	1/6W
R38	QRD161J-123	C.RESISTOR	12K	1/6W
R39	QRD161J-103	C.RESISTOR	10K	1/6W
R40	QRD161J-103	C.RESISTOR	10K	1/6W
R41	QRD161J-103	C.RESISTOR	10K	1/6W
R42	QRD161J-103	C.RESISTOR	10K	1/6W
R43	QRD161J-103	C.RESISTOR	10K	1/6W
R44	QRD161J-103	C.RESISTOR	10K	1/6W
R45	QRD161J-103	C.RESISTOR	10K	1/6W
R46	QRD161J-472	C.RESISTOR	4.7K	1/6W
R47	QRD161J-472	C.RESISTOR	4.7K	1/6W
R48	QRX026J-8R2	M.F.RESISTOR	8.2	2W
R49	QRD161J-222	C.RESISTOR	2.2K	1/6W
R50	QRD161J-222	C.RESISTOR	2.2K	1/6W
R51	QRV141F-5601	M.F.RESISTOR	5.60K	1/4W
R52	QRV141F-5601	M.F.RESISTOR	5.60K	1/4W
R53	QRD161J-222	C.RESISTOR	2.2K	1/6W
R54	QRD161J-104	C.RESISTOR	100K	1/6W
R55	QRD161J-100	C.RESISTOR	10	1/6W
R101	QRV141F-1332	M.F.RESISTOR	13.3K	1/4W
R102	QRV141F-1332	M.F.RESISTOR	13.3K	1/4W
R103	QRV141F-4701	M.F.RESISTOR	4.70K	1/4W
R104	QRV141F-4701	M.F.RESISTOR	4.70K	1/4W
R105	QRV141F-1002	M.F.RESISTOR	10.0K	1/4W

[AUDIO I/O]

Symbol No.	Part No.	Part Name	Description	
R106	QRV141F-1002	M.F.RESISTOR	10.0K	1/4W
R107	QRV141F-8201	M.F.RESISTOR	8.20K	1/4W
R108	QRV141F-8201	M.F.RESISTOR	8.20K	1/4W
R109	QRV141F-1002	M.F.RESISTOR	10.0K	1/4W
R110	QRV141F-1002	M.F.RESISTOR	10.0K	1/4W
R111	QRD161J-0R0	C.RESISTOR	0	1/6W
R112	QRD161J-0R0	C.RESISTOR	0	1/6W
R113	QRV141F-2372	M.F.RESISTOR	23.7K	1/4W
R114	QRV141F-2372	M.F.RESISTOR	23.7K	1/4W
R115	QRV141F-4701	M.F.RESISTOR	4.70K	1/4W
R116	QRV141F-4701	M.F.RESISTOR	4.70K	1/4W
R117	QRD161J-183	C.RESISTOR	18K	1/6W
R118	QRD161J-183	C.RESISTOR	18K	1/6W
R122	QRD161J-222	C.RESISTOR	2.2K	1/6W
R123	QRV141F-1002	M.F.RESISTOR	10.0K	1/4W
R124	QRV141F-1002	M.F.RESISTOR	10.0K	1/4W
R125	QRV141F-1002	M.F.RESISTOR	10.0K	1/4W
R126	QRV141F-1002	M.F.RESISTOR	10.0K	1/4W
R127	QRV141F-1002	M.F.RESISTOR	10.0K	1/4W
R128	QRV141F-1002	M.F.RESISTOR	10.0K	1/4W
R129	QRV141F-1002	M.F.RESISTOR	10.0K	1/4W
R130	QRV141F-1002	M.F.RESISTOR	10.0K	1/4W
R131	QRV141F-1872	M.F.RESISTOR	18.7K	1/4W
R132	QRV141F-1872	M.F.RESISTOR	18.7K	1/4W
R133	QRV141F-1872	M.F.RESISTOR	18.7K	1/4W
R134	QRV141F-1872	M.F.RESISTOR	18.7K	1/4W
R135	QRD161J-123	C.RESISTOR	12K	1/6W
R136	QRD161J-123	C.RESISTOR	12K	1/6W
R137	QRD161J-123	C.RESISTOR	12K	1/6W
R138	QRD161J-123	C.RESISTOR	12K	1/6W
R139	QRD161J-274	C.RESISTOR	270K	1/6W
R140	QRD161J-274	C.RESISTOR	270K	1/6W
R141	QRV141F-2052	M.F.RESISTOR	20.5K	1/4W
R142	QRV141F-2052	M.F.RESISTOR	20.5K	1/4W
R143	QRD161J-274.	C.RESISTOR	270K	1/6W
R144	QRD161J-274	C.RESISTOR	270K	1/6W
R145	QRD161J-0R0	C.RESISTOR	0	1/6W
R146	QRD161J-0R0	C.RESISTOR	0	1/6W
R147	QRV141F-1001	M.F.RESISTOR	1.00K	1/4W
R148	QRV141F-1001	M.F.RESISTOR	1.00K	1/4W
R149	QRV141F-2002AY	M.F.RESISTOR	20.0K	1/4W
R150	QRV141F-2002AY	M.F.RESISTOR	20.0K	1/4W
R151	QRD161J-101	C.RESISTOR	100	1/6W
R152	QRD161J-101	C.RESISTOR	100	1/6W
R153	QRD161J-101	C.RESISTOR	100	1/6W
R154	QRD161J-101	C.RESISTOR	100	1/6W
R155	QRD161J-123	C.RESISTOR	12K	1/6W
R156	QRD161J-123	C.RESISTOR	12K	1/6W
R157	QRD161J-123	C.RESISTOR	12K	1/6W
R158	QRD161J-123	C.RESISTOR	12K	1/6W
R159	QRX026J-1R5	M.F.RESISTOR	1.5	2W
R160	QRX026J-1R5	M.F.RESISTOR	1.5	2W
R161	QRX026J-1R5	M.F.RESISTOR	1.5	2W
R162	QRX026J-1R5	M.F.RESISTOR	1.5	2W
R163	QRG026J-220	O.M.F.RESISTOR	22	2W
R164	QRG026J-220	O.M.F.RESISTOR	22	2W
R165	QRD161J-123	C.RESISTOR	12K	1/6W
R166	QRD161J-123	C.RESISTOR	12K	1/6W
R167	QRD161J-123	C.RESISTOR	12K	1/6W
R168	QRD161J-123	C.RESISTOR	12K	1/6W

Symbol No.	Part No.	Part Name	Description	
R169	QRX026J-1R5	M.F.RESISTOR	1.5	2W
R170	QRX026J-1R5	M.F.RESISTOR	1.5	2W
R171	QRX026J-1R5	M.F.RESISTOR	1.5	2W
R172	QRX026J-1R5	M.F.RESISTOR	1.5	2W
R173	QRG026J-220	O.M.F.RESISTOR	22	2W
R174	QRG026J-220	O.M.F.RESISTOR	22	2W
R175	QRD161J-561	C.RESISTOR	560	1/6W
R176	QRD161J-561	C.RESISTOR	560	1/6W
R179	QRD161J-681	C.RESISTOR	680	1/6W
R180	QRD161J-103	C.RESISTOR	10K	1/6W
R181	QRD161J-682	C.RESISTOR	6.8K	1/6W
R182	QRD161J-223	C.RESISTOR	22K	1/6W
R183	QRD161J-222	C.RESISTOR	2.2K	1/6W
R184	QRD161J-681	C.RESISTOR	680	1/6W
R185	QRD161J-103	C.RESISTOR	10K	1/6W
R186	QRD161J-153	C.RESISTOR	15K	1/6W
R187	QRD161J-153	C.RESISTOR	15K	1/6W
R188	QRD161J-223	C.RESISTOR	22K	1/6W
R189	QRD161J-222	C.RESISTOR	2.2K	1/6W
R190	QRD161J-681	C.RESISTOR	680	1/6W
R191	QRD161J-103	C.RESISTOR	10K	1/6W
R192	QRD161J-682	C.RESISTOR	6.8K	1/6W
R193	QRD161J-681	C.RESISTOR	680	1/6W
R194	QRD161J-103	C.RESISTOR	10K	1/6W
R195	QRD161J-153	C.RESISTOR	15K	1/6W
R196	QRD161J-153	C.RESISTOR	15K	1/6W
R197	QRD161J-223	C.RESISTOR	22K	1/6W
R198	QRD161J-223	C.RESISTOR	22K	1/6W
R199	QRD161J-562	C.RESISTOR	5.6K	1/6W
R201	QRD161J-102	C.RESISTOR	1.0K	1/6W
R202	QRD161J-103	C.RESISTOR	10K	1/6W
R203	QRD161J-102	C.RESISTOR	1.0K	1/6W
R204	QRD161J-103	C.RESISTOR	10K	1/6W
R206	QRD161J-101	C.RESISTOR	100	1/6W
R207	QRD161J-183	C.RESISTOR	18K	1/6W
C1	QEPA1EM-475	E.CAPACITOR	4.7	25V
C2	QEPA1EM-475	E.CAPACITOR	4.7	25V
C3	QEPA1EM-475	E.CAPACITOR	4.7	25V
C4	QEPA1EM-475	E.CAPACITOR	4.7	25V
C5	QCS31HJ-220	CER.CAPACITOR	22P	50V
C6	QCS31HJ-220	CER.CAPACITOR	22P	50V
C7	QCS31HJ-220	CER.CAPACITOR	22P	50V
C8	QCS31HJ-220	CER.CAPACITOR	22P	50V
C9	QETA1VM-107	E.CAPACITOR	100	35V
C10	QETA1VM-107	E.CAPACITOR	100	35V
C11	QETA1VM-107	E.CAPACITOR	100	35V
C12	QETA1VM-107	E.CAPACITOR	100	35V
C13	QEK61EM-476	E.CAPACITOR	47	25V
C14	QEK61EM-476	E.CAPACITOR	47	25V
C15	QEK61EM-476	E.CAPACITOR	47	25V
C16	QEK61EM-476	E.CAPACITOR	47	25V
C17	QEPA1EM-475	E.CAPACITOR	4.7	25V
C18	QEPA1EM-475	E.CAPACITOR	4.7	25V
C19	QEK61EM-476	E.CAPACITOR	47	25V
C20	QEK61EM-476	E.CAPACITOR	47	25V
C21	QCZ0206-104	CER.CAPACITOR	0.10	
C22	QCZ0206-104	CER.CAPACITOR	0.10	
C23	QEK61EM-476	E.CAPACITOR	47	25V

Symbol No.	Part No.	Part Name	Description	
C24	QEK61EM-476	E.CAPACITOR	47	25V
C25	QETA1VM-227	E.CAPACITOR	220	35V
C26	QETA1VM-227	E.CAPACITOR	220	35V
C27	QETA1VM-227	E.CAPACITOR	220	35V
C28	QETA1VM-227	E.CAPACITOR	220	35V
C29	QEK61HM-106	E.CAPACITOR	10	50V
C30	QEK61HM-106	E.CAPACITOR	10	50V
C31	QEE81EM-476	E.CAPACITOR	47	25V
C32	QEE81EM-476	E.CAPACITOR	47	25V
C33	QCZ0206-104	CER.CAPACITOR	0.10	
C34	QCZ0206-104	CER.CAPACITOR	0.10	
C35	QCZ0206-104	CER.CAPACITOR	0.10	
C36	QCZ0206-104	CER.CAPACITOR	0.10	
C37	QEE81EM-336	E.CAPACITOR	33	25V
C38	QEE81EM-336	E.CAPACITOR	33	25V
C39	QCS31HJ-220	CER.CAPACITOR	22P	50V
C40	QCS31HJ-220	CER.CAPACITOR	22P	50V
C41	QCS31HJ-220	CER.CAPACITOR	22P	50V
C42	QCS31HJ-220	CER.CAPACITOR	22P	50V
C43	QCZ0206-104	CER.CAPACITOR	0.10	
C44	QCZ0206-104	CER.CAPACITOR	0.10	
C45	QEE81EM-336	E.CAPACITOR	33	25V
C46	QEE81EM-336	E.CAPACITOR	33	25V
C47	QCF11HP-103	CER.CAPACITOR	0.010	50V
C48	QCF11HP-103	CER.CAPACITOR	0.010	50V
C49	QETA1VM-107	E.CAPACITOR	100	35V
C50	QCF11HP-103	CER.CAPACITOR	0.010	50V
C51	QETA1VM-107	E.CAPACITOR	100	35V
C52	QCF11HP-103	CER.CAPACITOR	0.010	50V
C101	QEK61EM-476	E.CAPACITOR	47	25V
C102	QEK61EM-476	E.CAPACITOR	47	25V
C103	QEK61EM-476	E.CAPACITOR	47	25V
C104	QEK61EM-476	E.CAPACITOR	47	25V
C105	QEK61EM-476	E.CAPACITOR	47	25V
C106	QEK61EM-476	E.CAPACITOR	47	25V
C107	QEK61EM-476	E.CAPACITOR	47	25V
C108	QEK61EM-476	E.CAPACITOR	47	25V
C109	QCS31HJ-390	CER.CAPACITOR	39P	50V
C110	QCS31HJ-390	CER.CAPACITOR	39P	50V
C111	QCZ0206-104	CER.CAPACITOR	0.10	
C112	QCZ0206-104	CER.CAPACITOR	0.10	
C113	QCZ0206-104	CER.CAPACITOR	0.10	
C114	QCZ0206-104	CER.CAPACITOR	0.10	
C115	QCS31HJ-390	CER.CAPACITOR	39P	50V
C116	QCS31HJ-390	CER.CAPACITOR	39P	50V
C117	QEPA1EM-106	E.CAPACITOR	10	25V
C118	QEPA1EM-106	E.CAPACITOR	10	25V
C119	QEPA1EM-106	E.CAPACITOR	10	25V
C120	QEPA1EM-106	E.CAPACITOR	10	25V
C121	QCS31HJ-220	CER.CAPACITOR	22P	50V
C122	QCS31HJ-220	CER.CAPACITOR	22P	50V
C123	QCS31HJ-220	CER.CAPACITOR	22P	50V
C124	QCS31HJ-220	CER.CAPACITOR	22P	50V
C125	QCS31HJ-220	CER.CAPACITOR	22P	50V
C126	QCS31HJ-220	CER.CAPACITOR	22P	50V
C127	QCS31HJ-220	CER.CAPACITOR	22P	50V
C128	QCS31HJ-220	CER.CAPACITOR	22P	50V
C129	QCS11HJ-102	CER.CAPACITOR	1000P	50V
C130	QCS11HJ-102	CER.CAPACITOR	1000P	50V

Symbol No.	Part No.	Part Name	Description	
C131	QETA1VM-107	E.CAPACITOR	100	35V
C132	QETA1VM-107	E.CAPACITOR	100	35V
C133	QETA1VM-107	E.CAPACITOR	100	35V
C134	QETA1VM-107	E.CAPACITOR	100	35V
C135	QEK61EM-476	E.CAPACITOR	47	25V
C136	QEK61EM-476	E.CAPACITOR	47	25V
C137	QEK61CM-476Z	E.CAPACITOR	47	16V
C138	QETA1CM-337	E.CAPACITOR	330	16V
RY1	PU55260	RELAY		
RY2	PU55260	RELAY		
CN3	PGZ02142-120	CONNECTOR	120PIN	
CN4	PGZ02142-100	CONNECTOR	100PIN	
TP1	SQMX001-001	TEST POINT		
TP2	SQMX001-001	TEST POINT		
TP3	SQMX001-001	TEST POINT		
TP4	SQMX001-001	TEST POINT		
TP5	SQMX001-001	TEST POINT		
TP6	SQMX001-001	TEST POINT		
TP7	SQMX001-001	TEST POINT		
TP8	SQMX001-001	TEST POINT		
TP9	SQMX001-001	TEST POINT		
TP10	SQMX001-001	TEST POINT		
TP11	SQMX001-001	TEST POINT		
TP12	SQMX001-001	TEST POINT		
TP13	SQMX001-001	TEST POINT		
TP14	SQMX001-001	TEST POINT		
TP15	SQMX001-001	TEST POINT		
TP16	SQMX001-001	TEST POINT		
TP17	SQMX001-001	TEST POINT		
TP18	SQMX001-001	TEST POINT		
TP19	SQMX001-001	TEST POINT		
TP20	SQMX001-001	TEST POINT		
TP21	SQMX001-001	TEST POINT		
TP101	SQMX001-001	TEST POINT		
TP102	SQMX001-001	TEST POINT		
TP103	SQMX001-001	TEST POINT		
TP104	SQMX001-001	TEST POINT		
TP105	SQMX001-001	TEST POINT		
TP106	SQMX001-001	TEST POINT		
TP107	SQMX001-001	TEST POINT		
TP108	SQMX001-001	TEST POINT		
TP109	SQMX001-001	TEST POINT		
TP110	SQMX001-001	TEST POINT		
TP111	SQMX001-001	TEST POINT		
TP112	SQMX001-001	TEST POINT		
TP113	SQMX001-001	TEST POINT		
TP114	SQMX001-001	TEST POINT		
TP115	SQMX001-001	TEST POINT		
TP116	SQMX001-001	TEST POINT		
TB1	SQMX002-001	TERMINAL		
TB2	SQMX002-001	TERMINAL		
TB3	SQMX002-001	TERMINAL		
TB4	SQMX002-001	TERMINAL		

[AUDIO I/O]

Symbol No.	Part No.	Part Name	Description
SL1	PRD20530	SHIELD CASE	
SC1	DPSP2606Z	SCREW	M2.6×6
SP1	PGZ00582	SPACER	

6.14 MCTL/SV BOARD ASSEMBLY LIST 30

SLK1008-A1A 30□□□□□□□

Symbol No.	Part No.	Part Name	Description
IC1	UPD71055GB	I.C.(M)	NEC
IC2	SC78148GF-026	I.C.(M)	NEC
IC3	TC74HC138AF	I.C.(M)	TOSHIBA
IC4	PLSL1016	I.C.(M), ROM	JVC M27C512-15F1
SKT4	SSV2326-028	IC SOCKET	FOR IC4
IC5	TC74HC573AF	I.C.(M)	TOSHIBA
IC6	TC74HC86AF	I.C.(M)	TOSHIBA
IC7	BA10358F	I.C.(M)	ROHM
IC8	BR24C02F	I.C.(M)	ROHM
IC9	TC4W53F	I.C.(M)	TOSHIBA
IC10	TC7S08F	I.C.(M)	TOSHIBA
IC13	TC7W08F	I.C.(M)	TOSHIBA
IC14	BA10358F	I.C.(M)	ROHM
IC15	BA10358F	I.C.(M)	ROHM
IC16	TA8405S	I.C.(M)	TOSHIBA
IC17	UPC78L12T	I.C.(M)	NEC
IC18	TC4066BF	I.C.(M)	TOSHIBA
IC19	TC4066BF	I.C.(M)	TOSHIBA
IC20	NJM2068MD	I.C.(M)	JRC
IC21	BA10393F	I.C.(M)	ROHM
IC22	M62354FP	I.C.(M)	MITSUBISHI
IC23	BA10358F	I.C.(M)	ROHM
IC24	BA10358F	I.C.(M)	ROHM
IC25	BA10339F	I.C.(M)	ROHM
IC26	NJM2068MD	I.C.(M)	JRC
IC27	BA10393F	I.C.(M)	ROHM
IC28	TC4013BF	I.C.(M)	TOSHIBA
IC29	NJM2068MD	I.C.(M)	JRC
IC30	NJM2068MD	I.C.(M)	JRC
IC31	BA10358F	I.C.(M)	ROHM
IC32	TL431CPS	I.C.(M)	TEXAS
IC33	TC4W53F	I.C.(M)	TOSHIBA
IC34	BA7043FS	I.C.(M)	ROHM
IC35	BA10358F	I.C.(M)	ROHM
IC36	TC7W00F	I.C.(M)	TOSHIBA
IC37	TC4W53F	I.C.(M)	TOSHIBA
IC38	BA10393F	I.C.(M)	ROHM
IC39	BA10393F	I.C.(M)	ROHM
IC40	NJM2068MD	I.C.(M)	JRC
IC41	BA6441FP	I.C.(M)	ROHM
IC42	TC4538BF	I.C.(M)	TOSHIBA
Q1	DTC114YK	TRANSISTOR	ROHM
Q2	DTC114EK	TRANSISTOR	ROHM
Q3	DTC114EK	TRANSISTOR	ROHM
Q4	2SC2412K	TRANSISTOR	ROHM
Q5	2SB1142	TRANSISTOR	SANYO
Q6	2SC2412K	TRANSISTOR	ROHM
Q7	2SD1682	TRANSISTOR	SANYO
Q8	2SB1073(PQ)	TRANSISTOR	MATSUSHITA
Q9	DTC114EK	TRANSISTOR	ROHM
Q10	2SB1073(PQ)	TRANSISTOR	MATSUSHITA
Q11	DTC114EK	TRANSISTOR	ROHM
Q12	2SB907	TRANSISTOR	TOSHIBA
Q13	DTC114EK	TRANSISTOR	ROHM
Q14	2SB1073(PQ)	TRANSISTOR	MATSUSHITA

Symbol No.	Part No.	Part Name	Description	
Q15	DTC114EK	TRANSISTOR	ROHM	
Q16	2SB1073(PQ)	TRANSISTOR	MATSUSHITA	
Q17	DTC114EK	TRANSISTOR	ROHM	
Q18	DTA114EK	TRANSISTOR	ROHM	
Q19	2SC2412K	TRANSISTOR	ROHM	
Q20	2SC2412K	TRANSISTOR	ROHM	
Q21	2SC2412K	TRANSISTOR	ROHM	
Q22	2SC2412K	TRANSISTOR	ROHM	
Q23	2SC2412K	TRANSISTOR	ROHM	
Q24	2SC2412K	TRANSISTOR	ROHM	
Q25	2SB1142	TRANSISTOR	SANYO	
Q26	2SC2412K	TRANSISTOR	ROHM	
Q27	2SA1037K	TRANSISTOR	ROHM	
Q29	DTC114EK	TRANSISTOR	ROHM	
D1	DAN202K	DIODE	ROHM	
D2	RB400D	DIODE	ROHM	
D3	MA738	DIODE	MATSUSHITA	
D4	MA738	DIODE	MATSUSHITA	
D5	MA738	DIODE	MATSUSHITA	
D6	MA738	DIODE	MATSUSHITA	
D7	DAP202K	DIODE	ROHM	
D8	RB400D	DIODE	ROHM	
D9	DAN202K	DIODE	ROHM	
D10	DAN202K	DIODE	ROHM	
D11	DAN202K	DIODE	ROHM	
D12	DAN202K	DIODE	ROHM	
D13	MA738	DIODE	MATSUSHITA	
D14	MA3020	ZENER DIODE	MATSUSHITA	
R1	NRSA02J-104	M.G.RESISTOR	100K	1/10W
R2	NRSA02J-104	M.G.RESISTOR	100K	1/10W
R3	NRSA02J-104	M.G.RESISTOR	100K	1/10W
R4	NRSA02J-103	M.G.RESISTOR	10K	1/10W
R5	NRSA02J-103	M.G.RESISTOR	10K	1/10W
R6	NRSA02J-103	M.G.RESISTOR	10K	1/10W
R7	NRSA02J-121	M.G.RESISTOR	120	1/10W
R8	NRSA02J-104	M.G.RESISTOR	100K	1/10W
R9	NRSA02J-103	M.G.RESISTOR	10K	1/10W
R10	NRSA02J-104	M.G.RESISTOR	100K	1/10W
R11	NRSA02J-103	M.G.RESISTOR	10K	1/10W
R12	NRSA02J-104	M.G.RESISTOR	100K	1/10W
R13	NRSA02J-0R0	M.G.RESISTOR	0	1/10W
R14	NRSA02J-103	M.G.RESISTOR	10K	1/10W
R15	NRSA02J-103	M.G.RESISTOR	10K	1/10W
R16	NRSA02J-103	M.G.RESISTOR	10K	1/10W
R17	NRSA02J-104	M.G.RESISTOR	100K	1/10W
R18	NRSA02J-104	M.G.RESISTOR	100K	1/10W
R19	NRSA02J-104	M.G.RESISTOR	100K	1/10W
R20	NRSA02J-103	M.G.RESISTOR	10K	1/10W
R21	NRSA02J-103	M.G.RESISTOR	10K	1/10W
R22	NRSA02J-103	M.G.RESISTOR	10K	1/10W
R23	NRSA02J-223	M.G.RESISTOR	22K	1/10W
R24	NRSA02J-391	M.G.RESISTOR	390	1/10W
R25	NRSA02J-121	M.G.RESISTOR	120	1/10W
R26	NRSA02J-103	M.G.RESISTOR	10K	1/10W
R27	NRSA02J-104	M.G.RESISTOR	100K	1/10W
R28	NRSA02J-472	M.G.RESISTOR	4.7K	1/10W
R29	NRSA02J-104	M.G.RESISTOR	100K	1/10W

Symbol No.	Part No.	Part Name	Description	
R30	NRSA02J-223	M.G.RESISTOR	22K	1/10W
R31	NRSA02J-103	M.G.RESISTOR	10K	1/10W
R32	NRSA02J-223	M.G.RESISTOR	22K	1/10W
R33	NRSA02J-183	M.G.RESISTOR	18K	1/10W
R34	NRSA02J-103	M.G.RESISTOR	10K	1/10W
R35	NRSA02J-103	M.G.RESISTOR	10K	1/10W
R36	NRSA02J-223	M.G.RESISTOR	22K	1/10W
R37	NRSA02J-183	M.G.RESISTOR	18K	1/10W
R38	NRSA02J-103	M.G.RESISTOR	10K	1/10W
R39	NRSA02J-103	M.G.RESISTOR	10K	1/10W
R40	NRSA02J-102	M.G.RESISTOR	1.0K	1/10W
R41	NRSA02J-473	M.G.RESISTOR	47K	1/10W
R42	NRSA02J-473	M.G.RESISTOR	47K	1/10W
R43	NRSA02J-183	M.G.RESISTOR	18K	1/10W
R44	NRSA02J-823	M.G.RESISTOR	82K	1/10W
R45	NRSA02J-221	M.G.RESISTOR	220	1/10W
R46	NRSA02J-393	M.G.RESISTOR	39K	1/10W
R47	NRSA02J-153	M.G.RESISTOR	15K	1/10W
R48	NRSA02J-223	M.G.RESISTOR	22K	1/10W
R49	NRSA02J-473	M.G.RESISTOR	47K	1/10W
R50	NRSA02J-333	M.G.RESISTOR	33K	1/10W
R52	NRSA02J-102	M.G.RESISTOR	1.0K	1/10W
R53	NRSA02J-184	M.G.RESISTOR	180K	1/10W
R54	NRSA02J-104	M.G.RESISTOR	100K	1/10W
R55	NRSA02J-103	M.G.RESISTOR	10K	1/10W
R56	NRSA02J-103	M.G.RESISTOR	10K	1/10W
R57	NRSA02J-471	M.G.RESISTOR	470	1/10W
R58	NRSA02J-473	M.G.RESISTOR	47K	1/10W
R59	NRSA02J-473	M.G.RESISTOR	47K	1/10W
R60	NRSA02J-681	M.G.RESISTOR	680	1/10W
R61	NRSA02J-472	M.G.RESISTOR	4.7K	1/10W
R62	NRSA02J-472	M.G.RESISTOR	4.7K	1/10W
R63	QRG026J-101	O.M.F.RESISTOR	100	2W
R64	QRG026J-101	O.M.F.RESISTOR	100	2W
R65	NRSA02J-472	M.G.RESISTOR	4.7K	1/10W
R66	NRSA02J-472	M.G.RESISTOR	4.7K	1/10W
R67	NRSA02J-472	M.G.RESISTOR	4.7K	1/10W
R68	NRSA02J-472	M.G.RESISTOR	4.7K	1/10W
R69	NRSA02J-472	M.G.RESISTOR	4.7K	1/10W
R70	NRSA02J-472	M.G.RESISTOR	4.7K	1/10W
R71	NRSA02J-472	M.G.RESISTOR	4.7K	1/10W
R72	NRSA02J-472	M.G.RESISTOR	4.7K	1/10W
R73	NRSA02J-0R0	M.G.RESISTOR	0	1/10W
R74	NRSA02J-0R0	M.G.RESISTOR	0	1/10W
R75	NRSA02J-0R0	M.G.RESISTOR	0	1/10W
R77	NRSA02J-102	M.G.RESISTOR	1.0K	1/10W
R78	NRSA02J-102	M.G.RESISTOR	1.0K	1/10W
R79	NRSA02J-102	M.G.RESISTOR	1.0K	1/10W
R80	NRSA02J-102	M.G.RESISTOR	1.0K	1/10W
R81	NRSA02J-102	M.G.RESISTOR	1.0K	1/10W
R82	NRSA02J-102	M.G.RESISTOR	1.0K	1/10W
R83	NRSA02J-102	M.G.RESISTOR	1.0K	1/10W
R84	NRSA02J-102	M.G.RESISTOR	1.0K	1/10W
R85	NRSA02J-102	M.G.RESISTOR	1.0K	1/10W
R86	NRSA02J-102	M.G.RESISTOR	1.0K	1/10W
R87	NRSA02J-102	M.G.RESISTOR	1.0K	1/10W
R88	NRSA02J-102	M.G.RESISTOR	1.0K	1/10W
R89	NRSA02J-102	M.G.RESISTOR	1.0K	1/10W

[MCTL/SV]

Symbol No.	Part No.	Part Name	Description	
R90	NRSA02J-102	M.G.RESISTOR	1.0K	1/10W
R91	NRSA02J-102	M.G.RESISTOR	1.0K	1/10W
R92	NRSA02J-102	M.G.RESISTOR	1.0K	1/10W
R93	NRSA02J-102	M.G.RESISTOR	1.0K	1/10W
R94	NRSA02J-104	M.G.RESISTOR	100K	1/10W
R95	NRSA02J-104	M.G.RESISTOR	100K	1/10W
R96	NRSA02J-104	M.G.RESISTOR	100K	1/10W
R97	NRSA02J-104	M.G.RESISTOR	100K	1/10W
R98	NRSA02J-104	M.G.RESISTOR	100K	1/10W
R99	NRSA02J-104	M.G.RESISTOR	100K	1/10W
R100	NRSA02J-104	M.G.RESISTOR	100K	1/10W
R101	NRSA02J-104	M.G.RESISTOR	100K	1/10W
R102	NRSA02J-104	M.G.RESISTOR	100K	1/10W
R103	NRSA02J-104	M.G.RESISTOR	100K	1/10W
R104	NRSA02J-100	M.G.RESISTOR	10	1/10W
R105	NRSA02J-104	M.G.RESISTOR	100K	1/10W
R106	NRSA02J-104	M.G.RESISTOR	100K	1/10W
R107	NRSA02J-104	M.G.RESISTOR	100K	1/10W
R108	NRSA02J-104	M.G.RESISTOR	100K	1/10W
R109	NRSA02J-103	M.G.RESISTOR	10K	1/10W
R110	NRSA02J-121	M.G.RESISTOR	120	1/10W
R111	NRSA02J-121	M.G.RESISTOR	120	1/10W
R112	NRSA02J-121	M.G.RESISTOR	120	1/10W
R113	NRSA02J-102	M.G.RESISTOR	1.0K	1/10W
R114	NRSA02J-102	M.G.RESISTOR	1.0K	1/10W
R115	NRSA02J-102	M.G.RESISTOR	1.0K	1/10W
R116	NRSA02J-102	M.G.RESISTOR	1.0K	1/10W
R117	NRSA02J-561	M.G.RESISTOR	560	1/10W
R118	NRSA02J-102	M.G.RESISTOR	1.0K	1/10W
R119	NRSA02J-102	M.G.RESISTOR	1.0K	1/10W
R120	NRSA02J-102	M.G.RESISTOR	1.0K	1/10W
R121	NRSA02J-102	M.G.RESISTOR	1.0K	1/10W
R122	NRSA02J-104	M.G.RESISTOR	100K	1/10W
R123	NRSA02J-104	M.G.RESISTOR	100K	1/10W
R124	NRSA02J-104	M.G.RESISTOR	100K	1/10W
R125	NRSA02J-100	M.G.RESISTOR	10	1/10W
R126	NRSA02J-681	M.G.RESISTOR	680	1/10W
R127	NRSA02J-681	M.G.RESISTOR	680	1/10W
R128	NRSA02J-103	M.G.RESISTOR	10K	1/10W
R129	NRSA02J-103	M.G.RESISTOR	10K	1/10W
R130	NRSA02J-103	M.G.RESISTOR	10K	1/10W
R131	NRSA02J-103	M.G.RESISTOR	10K	1/10W
R132	NRSA02J-103	M.G.RESISTOR	10K	1/10W
R133	NRSA02J-103	M.G.RESISTOR	10K	1/10W
R134	NRSA02J-102	M.G.RESISTOR	1.0K	1/10W
R135	NRSA02J-561	M.G.RESISTOR	560	1/10W
R136	NRSA02J-564	M.G.RESISTOR	560K	1/10W
R137	NRSA02J-105	M.G.RESISTOR	1.0M	1/10W
R138	NRSA02J-102	M.G.RESISTOR	1.0K	1/10W
R139	NRSA02J-102	M.G.RESISTOR	1.0K	1/10W
R140	NRSA02J-103	M.G.RESISTOR	10K	1/10W
R141	NRSA02J-222	M.G.RESISTOR	2.2K	1/10W
R142	NRSA02J-394	M.G.RESISTOR	390K	1/10W
R143	NRSA02J-153	M.G.RESISTOR	15K	1/10W
R144	NRSA02J-153	M.G.RESISTOR	15K	1/10W
R145	NRSA02J-472	M.G.RESISTOR	4.7K	1/10W
R146	NRSA02J-103	M.G.RESISTOR	10K	1/10W
R147	NRSA02J-103	M.G.RESISTOR	10K	1/10W
R148	NRSA02J-100	M.G.RESISTOR	10	1/10W

Symbol No.	Part No.	Part Name	Description	
R149	NRSA02J-101	M.G.RESISTOR	100	1/10W
R150	NRSA02J-101	M.G.RESISTOR	100	1/10W
R151	NRSA02J-101	M.G.RESISTOR	100	1/10W
R152	NRSA02J-332	M.G.RESISTOR	3.3K	1/10W
R153	NRSA02J-473	M.G.RESISTOR	47K	1/10W
R154	NRSA02J-332	M.G.RESISTOR	3.3K	1/10W
R155	NRSA02J-103	M.G.RESISTOR	10K	1/10W
R156	NRSA02J-473	M.G.RESISTOR	47K	1/10W
R157	NRSA02J-474	M.G.RESISTOR	470K	1/10W
R158	NRSA02J-222	M.G.RESISTOR	2.2K	1/10W
R159	NRSA02J-223	M.G.RESISTOR	22K	1/10W
R160	NRSA02J-222	M.G.RESISTOR	2.2K	1/10W
R161	NRSA02J-222	M.G.RESISTOR	2.2K	1/10W
R162	NRSA02J-332	M.G.RESISTOR	3.3K	1/10W
R163	NRSA02J-473	M.G.RESISTOR	47K	1/10W
R164	NRSA02J-332	M.G.RESISTOR	3.3K	1/10W
R165	NRSA02J-103	M.G.RESISTOR	10K	1/10W
R166	NRSA02J-473	M.G.RESISTOR	47K	1/10W
R167	NRSA02J-474	M.G.RESISTOR	470K	1/10W
R168	NRSA02J-222	M.G.RESISTOR	2.2K	1/10W
R169	NRSA02J-223	M.G.RESISTOR	22K	1/10W
R170	NRSA02J-222	M.G.RESISTOR	2.2K	1/10W
R171	NRSA02J-222	M.G.RESISTOR	2.2K	1/10W
R172	NRSA02J-332	M.G.RESISTOR	3.3K	1/10W
R173	NRSA02J-473	M.G.RESISTOR	47K	1/10W
R174	NRSA02J-332	M.G.RESISTOR	3.3K	1/10W
R175	NRSA02J-103	M.G.RESISTOR	10K	1/10W
R176	NRSA02J-473	M.G.RESISTOR	47K	1/10W
R177	NRSA02J-474	M.G.RESISTOR	470K	1/10W
R178	NRSA02J-222	M.G.RESISTOR	2.2K	1/10W
R179	NRSA02J-223	M.G.RESISTOR	22K	1/10W
R180	NRSA02J-222	M.G.RESISTOR	2.2K	1/10W
R181	NRSA02J-222	M.G.RESISTOR	2.2K	1/10W
R182	NRSA02J-332	M.G.RESISTOR	3.3K	1/10W
R183	NRSA02J-473	M.G.RESISTOR	47K	1/10W
R184	NRSA02J-332	M.G.RESISTOR	3.3K	1/10W
R185	NRSA02J-103	M.G.RESISTOR	10K	1/10W
R186	NRSA02J-473	M.G.RESISTOR	47K	1/10W
R187	NRSA02J-474	M.G.RESISTOR	470K	1/10W
R188	NRSA02J-222	M.G.RESISTOR	2.2K	1/10W
R189	NRSA02J-223	M.G.RESISTOR	22K	1/10W
R190	NRSA02J-222	M.G.RESISTOR	2.2K	1/10W
R191	NRSA02J-222	M.G.RESISTOR	2.2K	1/10W
R192	NRSA02J-473	M.G.RESISTOR	47K	1/10W
R193	NRSA02J-473	M.G.RESISTOR	47K	1/10W
R194	NRSA02J-222	M.G.RESISTOR	2.2K	1/10W
R195	NRSA02J-562	M.G.RESISTOR	5.6K	1/10W
R196	NRSA02J-222	M.G.RESISTOR	2.2K	1/10W
R197	NRSA02J-684	M.G.RESISTOR	680K	1/10W
R198	NRSA02J-222	M.G.RESISTOR	2.2K	1/10W
R199	NRSA02J-104	M.G.RESISTOR	100K	1/10W
R200	NRSA02J-222	M.G.RESISTOR	2.2K	1/10W
R201	NRSA02J-222	M.G.RESISTOR	2.2K	1/10W
R202	NRSA02J-222	M.G.RESISTOR	2.2K	1/10W
R203	NRSA02J-562	M.G.RESISTOR	5.6K	1/10W
R204	NRSA02J-222	M.G.RESISTOR	2.2K	1/10W
R205	NRSA02J-684	M.G.RESISTOR	680K	1/10W
R206	NRSA02J-222	M.G.RESISTOR	2.2K	1/10W
R207	NRSA02J-104	M.G.RESISTOR	100K	1/10W

Symbol No.	Part No.	Part Name	Description	
R208	NRSA02J-222	M.G.RESISTOR	2.2K	1/10W
R209	NRSA02J-222	M.G.RESISTOR	2.2K	1/10W
R210	NRSA02J-823	M.G.RESISTOR	82K	1/10W
R211	NRSA02J-103	M.G.RESISTOR	10K	1/10W
R212	NRSA02J-102	M.G.RESISTOR	1.0K	1/10W
R213	NRSA02J-153	M.G.RESISTOR	15K	1/10W
R214	NRSA02J-153	M.G.RESISTOR	15K	1/10W
R215	NRSA02J-102	M.G.RESISTOR	1.0K	1/10W
R216	NRSA02J-333	M.G.RESISTOR	33K	1/10W
R217	NRSA02J-222	M.G.RESISTOR	2.2K	1/10W
R218	NRSA02J-273	M.G.RESISTOR	27K	1/10W
R219	NRSA02J-223	M.G.RESISTOR	22K	1/10W
R220	NRSA02J-103	M.G.RESISTOR	10K	1/10W
R221	NRSA02J-334	M.G.RESISTOR	330K	1/10W
R222	NRSA02J-223	M.G.RESISTOR	22K	1/10W
R223	NRSA02J-223	M.G.RESISTOR	22K	1/10W
R224	NRSA02J-474	M.G.RESISTOR	470K	1/10W
R225	NRSA02J-474	M.G.RESISTOR	470K	1/10W
R226	NRSA02J-821	M.G.RESISTOR	820	1/10W
R227	NRSA02J-104	M.G.RESISTOR	100K	1/10W
R228	NRSA02J-182	M.G.RESISTOR	1.8K	1/10W
R229	NRSA02J-271	M.G.RESISTOR	270	1/10W
R230	NRSA02J-221	M.G.RESISTOR	220	1/10W
R231	NRVA62D-103	M.F.RESISTOR	10K	1/16W
R232	NRVA62D-103	M.F.RESISTOR	10K	1/16W
R233	NRSA02J-681	M.G.RESISTOR	680	1/10W
R234	NRSA02J-681	M.G.RESISTOR	680	1/10W
R235	NRSA02J-681	M.G.RESISTOR	680	1/10W
R236	NRSA02J-100	M.G.RESISTOR	10	1/10W
R238	NRSA02J-102	M.G.RESISTOR	1.0K	1/10W
R239	NRSA02J-473	M.G.RESISTOR	47K	1/10W
R240	NRSA02J-102	M.G.RESISTOR	1.0K	1/10W
R241	NRSA02J-223	M.G.RESISTOR	22K	1/10W
R242	NRSA02J-333	M.G.RESISTOR	33K	1/10W
R243	NRSA02J-683	M.G.RESISTOR	68K	1/10W
R244	NRSA02J-334	M.G.RESISTOR	330K	1/10W
R245	NRSA02J-104	M.G.RESISTOR	100K	1/10W
R246	NRSA02J-104	M.G.RESISTOR	100K	1/10W
R248	NRSA02J-393	M.G.RESISTOR	39K	1/10W
R249	NRSA02J-103	M.G.RESISTOR	10K	1/10W
R250	NRSA02J-103	M.G.RESISTOR	10K	1/10W
R251	NRSA02J-101	M.G.RESISTOR	100	1/10W
R252	NRSA02J-475	M.G.RESISTOR	4.7M	1/10W
R253	NRSA02J-105	M.G.RESISTOR	1.0M	1/10W
R255	NRSA02J-0R0	M.G.RESISTOR	0	1/10W
R256	NRSA02J-223	M.G.RESISTOR	22K	1/10W
R257	NRSA02J-224	M.G.RESISTOR	220K	1/10W
R258	NRSA02J-334	M.G.RESISTOR	330K	1/10W
R259	NRSA02J-563	M.G.RESISTOR	56K	1/10W
R260	NRSA02J-182	M.G.RESISTOR	1.8K	1/10W
R261	NRSA02J-333	M.G.RESISTOR	33K	1/10W
R262	NRSA02J-103	M.G.RESISTOR	10K	1/10W
R263	NRSA02J-222	M.G.RESISTOR	2.2K	1/10W
R264	NRSA02J-474	M.G.RESISTOR	470K	1/10W
R265	NRSA02J-103	M.G.RESISTOR	10K	1/10W
R266	NRSA02J-222	M.G.RESISTOR	2.2K	1/10W
R267	NRSA02J-102	M.G.RESISTOR	1.0K	1/10W
R268	NRSA02J-272	M.G.RESISTOR	2.7K	1/10W
R269	NRSA02J-272	M.G.RESISTOR	2.7K	1/10W

Symbol No.	Part No.	Part Name	Description	
R270	NRSA02J-272	M.G.RESISTOR	2.7K	1/10W
R271	NRSA02J-184	M.G.RESISTOR	180K	1/10W
R272	NRSA02J-473	M.G.RESISTOR	47K	1/10W
R273	NRSA02J-103	M.G.RESISTOR	10K	1/10W
R274	NRSA02J-103	M.G.RESISTOR	10K	1/10W
R275	NRSA02J-563	M.G.RESISTOR	56K	1/10W
R277	NRSA02J-474	M.G.RESISTOR	470K	1/10W
R278	NRSA02J-102	M.G.RESISTOR	1.0K	1/10W
R280	NRSA02J-123	M.G.RESISTOR	12K	1/10W
R281	NRSA02J-103	M.G.RESISTOR	10K	1/10W
R282	NRSA02J-103	M.G.RESISTOR	10K	1/10W
R283	NRSA02J-103	M.G.RESISTOR	10K	1/10W
R284	NRSA02J-101	M.G.RESISTOR	100	1/10W
R286	NRSA02J-222	M.G.RESISTOR	2.2K	1/10W
R287	NRSA02J-105	M.G.RESISTOR	1.0M	1/10W
R288	NRSA02J-563	M.G.RESISTOR	56K	1/10W
R289	NRSA02J-274	M.G.RESISTOR	270K	1/10W
R290	NRSA02J-332	M.G.RESISTOR	3.3K	1/10W
R291	QRX016J-R33	M.F.RESISTOR	0.33	1W
R292	NRSA02J-0R0	M.G.RESISTOR	0	1/10W
R293	NRSA02J-104	M.G.RESISTOR	100K	1/10W
R294	NRSA02J-124	M.G.RESISTOR	120K	1/10W
R295	NRSA02J-103	M.G.RESISTOR	10K	1/10W
R296	NRSA02J-103	M.G.RESISTOR	10K	1/10W
R297	NRSA02J-102	M.G.RESISTOR	1.0K	1/10W
R298	NRSA02J-562	M.G.RESISTOR	5.6K	1/10W
R299	NRSA02J-103	M.G.RESISTOR	10K	1/10W
R300	NRSA02J-221	M.G.RESISTOR	220	1/10W
R301	NRSA02J-221	M.G.RESISTOR	220	1/10W
R302	NRSA02J-103	M.G.RESISTOR	10K	1/10W
R303	NRSA02J-104	M.G.RESISTOR	100K	1/10W
R304	NRSA02J-103	M.G.RESISTOR	10K	1/10W
R305	NRSA02J-103	M.G.RESISTOR	10K	1/10W
VR1	NVP1416-103	TRIM.RESISTOR	TENS GAIN	
VR2	NVP1416-102	TRIM.RESISTOR	TENS BIAS	
C1	NCB21HK-103	CER.CAPACITOR	0.010	50V
C2	NCB21HK-103	CER.CAPACITOR	0.010	50V
C3	NCB21HK-103	CER.CAPACITOR	0.010	50V
C4	NCB21HK-103	CER.CAPACITOR	0.010	50V
C5	NCB21HK-103	CER.CAPACITOR	0.010	50V
C6	NCB21HK-103	CER.CAPACITOR	0.010	50V
C7	NCB21HK-103	CER.CAPACITOR	0.010	50V
C8	NCB21HK-103	CER.CAPACITOR	0.010	50V
C9	NCB21HK-103	CER.CAPACITOR	0.010	50V
C10	NCB21HK-103	CER.CAPACITOR	0.010	50V
C11	NCB21HK-103	CER.CAPACITOR	0.010	50V
C12	NCB21HK-223	CER.CAPACITOR	0.022	50V
C13	NCB21HK-223	CER.CAPACITOR	0.022	50V
C14	NCT03CH-101	CER.CAPACITOR	100P	50V
C15	NCT03CH-101	CER.CAPACITOR	100P	50V
C16	NCB21HK-223	CER.CAPACITOR	0.022	50V
C17	NCB21HK-223	CER.CAPACITOR	0.022	50V
C18	NCB21HK-223	CER.CAPACITOR	0.022	50V
C19	NCT03CH-101	CER.CAPACITOR	100P	50V
C20	NCB21HK-223	CER.CAPACITOR	0.022	50V
C21	NCT03CH-101	CER.CAPACITOR	100P	50V

MCTL/SV]

Symbol No.	Part No.	Part Name	Description	
C22	NCB21HK-223	CER.CAPACITOR	0.022	50V
C23	NCT03CH-101	CER.CAPACITOR	100P	50V
C24	NCT03CH-101	CER.CAPACITOR	100P	50V
C25	NCT03CH-101	CER.CAPACITOR	100P	50V
C26	NCT03CH-101	CER.CAPACITOR	100P	50V
C27	NCT03CH-101	CER.CAPACITOR	100P	50V
C28	NCT03CH-101	CER.CAPACITOR	100P	50V
C29	NCT03CH-101	CER.CAPACITOR	100P	50V
C30	NCT03CH-101	CER.CAPACITOR	100P	50V
C31	NCT03CH-101	CER.CAPACITOR	100P	50V
C32	NCT03CH-101	CER.CAPACITOR	100P	50V
C33	NCT03CH-101	CER.CAPACITOR	100P	50V
C34	NCT03CH-101	CER.CAPACITOR	100P	50V
C35	NCT03CH-101	CER.CAPACITOR	100P	50V
C36	NCT03CH-101	CER.CAPACITOR	100P	50V
C37	NCT03CH-101	CER.CAPACITOR	100P	50V
C38	NCT03CH-101	CER.CAPACITOR	100P	50V
C39	NCT03CH-101	CER.CAPACITOR	100P	50V
C40	NCT03CH-101	CER.CAPACITOR	100P	50V
C41	NCT03CH-101	CER.CAPACITOR	100P	50V
C42	NCT03CH-101	CER.CAPACITOR	100P	50V
C43	NCT03CH-101	CER.CAPACITOR	100P	50V
C44	NCT03CH-101	CER.CAPACITOR	100P	50V
C45	NCT03CH-101	CER.CAPACITOR	100P	50V
C46	NCT03CH-101	CER.CAPACITOR	100P	50V
C47	NCB21HK-223	CER.CAPACITOR	0.022	50V
C48	NCT03CH-101	CER.CAPACITOR	100P	50V
C49	NCB21HK-223	CER.CAPACITOR	0.022	50V
C50	NCB21HK-103	CER.CAPACITOR	0.010	50V
C51	NCT03CH-470	CER.CAPACITOR	47P	50V
C52	NCT03CH-270	CER.CAPACITOR	27P	50V
C53	NCB21HK-223	CER.CAPACITOR	0.022	50V
C54	NEH91CM-476	E.CAPACITOR	47	16V
C55	NCB21HK-473	CER.CAPACITOR	0.047	50V
C56	NCB21HK-223	CER.CAPACITOR	0.022	50V
C57	NCT03CH-102	CER.CAPACITOR	1000P	50V
C58	NCB21HK-223	CER.CAPACITOR	0.022	50V
C59	NCB21HK-223	CER.CAPACITOR	0.022	50V
C60	NCB21HK-223	CER.CAPACITOR	0.022	50V
C61	NCB21HK-223	CER.CAPACITOR	0.022	50V
C62	NCB21HK-223	CER.CAPACITOR	0.022	50V
C63	NCB21HK-223	CER.CAPACITOR	0.022	50V
C64	NCB21HK-223	CER.CAPACITOR	0.022	50V
C65	NCB21HK-223	CER.CAPACITOR	0.022	50V
C66	NCB21HK-472	CER.CAPACITOR	4700P	50V
C67	NCB21HK-472	CER.CAPACITOR	4700P	50V
C68	NCB21HK-473	CER.CAPACITOR	0.047	50V
C69	NCB21HK-273	CER.CAPACITOR	0.027	50V
C70	NCB21EK-104	CER.CAPACITOR	0.10	25V
C71	NCB21HK-472	CER.CAPACITOR	4700P	50V
C72	NCB21HK-472	CER.CAPACITOR	4700P	50V
C73	NCB21HK-223	CER.CAPACITOR	0.022	50V
C74	NEH91CM-476	E.CAPACITOR	47	16V
C75	NCB21HK-223	CER.CAPACITOR	0.022	50V
C76	NEH51EM-107	E.CAPACITOR	100	25V
C79	NCT03CH-102	CER.CAPACITOR	1000P	50V
C80	NCT03CH-470	CER.CAPACITOR	47P	50V
C81	NCT03CH-271	CER.CAPACITOR	270P	50V
C82	NEH91CM-476	E.CAPACITOR	47	16V
C83	NCB21EK-104	CER.CAPACITOR	0.10	25V

Symbol No.	Part No.	Part Name	Description	
C84	NCB21HK-473	CER.CAPACITOR	0.047	50V
C85	NEN21AM-106	NP.CAPACITOR	10	10V
C86	NCB21HK-223	CER.CAPACITOR	0.022	50V
C87	NEH91CM-476	E.CAPACITOR	47	16V
C88	NCT03CH-101	CER.CAPACITOR	100P	50V
C89	NCT03CH-101	CER.CAPACITOR	100P	50V
C90	NCT03CH-101	CER.CAPACITOR	100P	50V
C91	NCB21HK-223	CER.CAPACITOR	0.022	50V
C92	NCT03CH-102	CER.CAPACITOR	1000P	50V
C93	NCB21EK-104	CER.CAPACITOR	0.10	25V
C94	NCT03CH-470	CER.CAPACITOR	47P	50V
C95	NCB21HK-223	CER.CAPACITOR	0.022	50V
C96	NEH91CM-476	E.CAPACITOR	47	16V
C97	NCT03CH-102	CER.CAPACITOR	1000P	50V
C98	NCB21EK-104	CER.CAPACITOR	0.10	25V
C99	NCT03CH-470	CER.CAPACITOR	47P	50V
C100	NCT03CH-102	CER.CAPACITOR	1000P	50V
C101	NCB21EK-104	CER.CAPACITOR	0.10	25V
C102	NCT03CH-470	CER.CAPACITOR	47P	50V
C103	NCT03CH-102	CER.CAPACITOR	1000P	50V
C104	NCB21EK-104	CER.CAPACITOR	0.10	25V
C105	NCT03CH-470	CER.CAPACITOR	47P	50V
C106	NCB21HK-223	CER.CAPACITOR	0.022	50V
C107	NCT03CH-102	CER.CAPACITOR	1000P	50V
C108	NCT03CH-100	CER.CAPACITOR	10P	50V
C109	NCT03CH-100	CER.CAPACITOR	10P	50V
C110	NCT03CH-102	CER.CAPACITOR	1000P	50V
C111	NCT03CH-101	CER.CAPACITOR	100P	50V
C112	NCT03CH-101	CER.CAPACITOR	100P	50V
C113	NCB21HK-223	CER.CAPACITOR	0.022	50V
C114	NCT03CH-102	CER.CAPACITOR	1000P	50V
C115	NCB21HK-473	CER.CAPACITOR	0.047	50V
C116	NCT03CH-471	CER.CAPACITOR	470P	50V
C117	NCB21HK-472	CER.CAPACITOR	4700P	50V
C118	NCB21HK-223	CER.CAPACITOR	0.022	50V
C119	NEH91CM-476	E.CAPACITOR	47	16V
C120	NCB21HK-473	CER.CAPACITOR	0.047	50V
C121	NCB21EK-104	CER.CAPACITOR	0.10	25V
C122	NCB21HK-223	CER.CAPACITOR	0.022	50V
C123	NEH91CM-476	E.CAPACITOR	47	16V
C124	NCB21HK-223	CER.CAPACITOR	0.022	50V
C125	NEH91CM-106	E.CAPACITOR	10	16V
C126	NCB21HK-223	CER.CAPACITOR	0.022	50V
C127	NEH91CM-476	E.CAPACITOR	47	16V
C128	NCB21EK-104	CER.CAPACITOR	0.10	25V
C129	NCT03CH-102	CER.CAPACITOR	1000P	50V
C130	NCB21EK-104	CER.CAPACITOR	0.10	25V
C131	NCT03CH-8R0	CER.CAPACITOR	8.0P	50V
C132	NCB21EK-104	CER.CAPACITOR	0.10	25V
C133	NCB21HK-103	CER.CAPACITOR	0.010	50V
C134	NCB21HK-103	CER.CAPACITOR	0.010	50V
C135	NCT03CH-102	CER.CAPACITOR	1000P	50V
C136	NCT03CH-102	CER.CAPACITOR	1000P	50V
C137	NCT03CH-101	CER.CAPACITOR	100P	50V
C138	NCB21EK-563	CER.CAPACITOR	0.056	25V
C139	NCB21EK-104	CER.CAPACITOR	0.10	25V
C140	NCB21HK-223	CER.CAPACITOR	0.022	50V
C141	NEH91CM-476	E.CAPACITOR	47	16V
C142	NCB21HK-103	CER.CAPACITOR	0.010	50V

Symbol No.	Part No.	Part Name	Description
C143	NCT03CH-102	CER.CAPACITOR	1000P 50V
C144	NEH51EM-107	E.CAPACITOR	100 25V
C145	NCB21HK-223	CER.CAPACITOR	0.022 50V
C146	NEH51EM-107	E.CAPACITOR	100 25V
C147	NEH51EM-107	E.CAPACITOR	100 25V
C148	NCB21HK-223	CER.CAPACITOR	0.022 50V
C149	NCB21HK-273	CER.CAPACITOR	0.027 50V
C150	NCB21EK-104	CER.CAPACITOR	0.10 25V
C151	NCB21HK-473	CER.CAPACITOR	0.047 50V
C152	NCT03CH-102	CER.CAPACITOR	1000P 50V
C153	NCT03CH-471	CER.CAPACITOR	470P 50V
C154	NEH91CM-106	E.CAPACITOR	10 16V
C155	NEH91CM-106	E.CAPACITOR	10 16V
C156	NCB21EK-104	CER.CAPACITOR	0.10 25V
C157	NCB21HK-103	CER.CAPACITOR	0.010 50V
C158	NCB21HK-103	CER.CAPACITOR	0.010 50V
C159	NCB21EK-104	CER.CAPACITOR	0.10 25V
C160	NCB21EK-104	CER.CAPACITOR	0.10 25V
C161	NCB21HK-223	CER.CAPACITOR	0.022 50V
C162	NEH91CM-476	E.CAPACITOR	47 16V
C163	NEN21HM-105	NP.CAPACITOR	1.0 50V
C164	NEN21HM-105	NP.CAPACITOR	1.0 50V
C165	NEN21HM-105	NP.CAPACITOR	1.0 50V
C166	NCB21HK-223	CER.CAPACITOR	0.022 50V
C167	NCB21HK-223	CER.CAPACITOR	0.022 50V
C168	NCB21HK-223	CER.CAPACITOR	0.022 50V
C169	NCB21HK-223	CER.CAPACITOR	0.022 50V
C170	NEH51EM-107	E.CAPACITOR	100 25V
C171	NCB21HK-223	CER.CAPACITOR	0.022 50V
C172	NCT03CH-271	CER.CAPACITOR	270P 50V
C173	NCT03CH-391	CER.CAPACITOR	390P 50V
C174	NCB21EK-104	CER.CAPACITOR	0.10 25V
L1	SSV2810-221	COIL	220μ
L2	PU50277	PEAKING COIL	
L3	YU41134-221	COIL	220μ
L4	SSV2810-221	COIL	220μ
L5	YU41134-221	COIL	220μ
L6	YU41134-221	COIL	220μ
L7	YU41134-221	COIL	220μ
L8	SCV1950-100	PEAKING COIL	10μ
L9	PGZ02202	CHOKE COIL	
L10	SSV2810-330	COIL	33μ
L11	SSV2810-330	COIL	33μ
L12	YU41134-221	COIL	220μ
X1	PEVB0335	CRYSTAL	12MHz
CN1	PGZ02149-004	CONNECTOR	4PIN
CN2	PGZ02149-008	CONNECTOR	8PIN
CN3	PGZ02149-004	CONNECTOR	4PIN
CN4	PGZ02149-006	CONNECTOR	6PIN
CN5	PGZ02186-24	CONNECTOR	24PIN
CN6	PGZ02186-18	CONNECTOR	18PIN
CN7	PGZ02149-008	CONNECTOR	8PIN
CN8	PGZ02149-008	CONNECTOR	8PIN
CN9	PGZ02149-003	CONNECTOR	3PIN
CN10	PGZ02149-010	CONNECTOR	10PIN

Symbol No.	Part No.	Part Name	Description
CN11	PGZ02149-008	CONNECTOR	8PIN
CN12	PGZ02149-004	CONNECTOR	4PIN
CN13	PGZ02149-003	CONNECTOR	3PIN
CN14	PGZ02149-010	CONNECTOR	10PIN
CN15	PGZ02149-006	CONNECTOR	6PIN
CN16	PGZ02149-008	CONNECTOR	8PIN
CN17	PGZ02149-007	CONNECTOR	7PIN
TP1	SSV1096-001	TEST POINT	
TP2	SSV1096-001	TEST POINT	
TP3	SSV1096-001	TEST POINT	
TP4	SSV1096-001	TEST POINT	
TP5	SSV1096-001	TEST POINT	
TP6	SSV1096-001	TEST POINT	
TP7	SSV1096-001	TEST POINT	
TP8	SSV1096-001	TEST POINT	
TP9	SSV1096-001	TEST POINT	
TP10	SSV1096-001	TEST POINT	
TP11	SSV1096-001	TEST POINT	
TP12	SSV1096-001	TEST POINT	
TP13	SSV1096-001	TEST POINT	
TP14	SSV1096-001	TEST POINT	
CP1	ICP-S1.0TN	I.C.PROTECTOR	
LB1	SM30051-001	LABEL	FOR IC4
HS1	PRD44870	HEAT SINK	
SC1	SS47723-001	SCREW	

6.15 SYS/TC BOARD ASSEMBLY LIST [3][1]

SLK1033-I0A [3][1][ ][ ][ ][ ][ ][ ]

Symbol No.	Part No.	Part Name	Description
IC101	M51957BFP	I.C.(M)	MITSUBISHI
IC103	UPD784021GC	I.C.(M)	NEC
IC104	TC74HC373AF	I.C.(M)	TOSHIBA
IC105	PLSL1017	I.C.(M), ROM	JVC, M27C512-15F1
LB1	SM30051-001	LABEL	FOR IC105
SK1	SSV2326-028	IC SOCKET	FOR IC105
IC106	M50255P	I.C.(M)	MITSUBISHI
IC107	TC4021BF	I.C.(M)	TOSHIBA
IC108	TC4021BF	I.C.(M)	TOSHIBA
IC109	BR24C04F	I.C.(M)	ROHM
IC110	TC4066BF	I.C.(M)	TOSHIBA
IC111	TC74HC00AF	I.C.(M)	TOSHIBA
IC112	TC74HC30AF	I.C.(M)	TOSHIBA
IC113	TC74HC32AF	I.C.(M)	TOSHIBA
IC114	HD64180ZRFS8	I.C.(M)	HITACHI
IC115	TMPZ84C30AM-6	I.C.(M)	TOSHIBA
IC116	PLSL1018	I.C.(M), ROM	JVC, M27C512-15F1
LB2	SM30051-001	LABEL	FOR IC116
SK2	SSV2326-028	IC SOCKET	FOR IC116
IC117	TC5564AFL-15	I.C.(M)	TOSHIBA
IC118	TMP82C255AN-2	I.C.(M)	TOSHIBA
IC119	TMP91C640N-2381	I.C.(M)	TOSHIBA
IC120	MC34051P	I.C.(M)	MOTOROLA
IC121	TC74HC138AF	I.C.(M)	TOSHIBA
IC122	TC74HC126AF	I.C.(M)	TOSHIBA
IC123	TC74HC32AF	I.C.(M)	TOSHIBA
IC124	TC74HC32AF	I.C.(M)	TOSHIBA
IC125	TC74HC08AF	I.C.(M)	TOSHIBA
IC126	TC74HC04AF	I.C.(M)	TOSHIBA
IC129	ICL232CBE	I.C.(M)	INTERSIL
IC501	UPD78P148GF-201	I.C.(M)	NEC
IC502	VC2067A	I.C.(M)	JVC
IC504	VC2080	I.C.(M)	JVC
IC505	TC74HC04AF	I.C.(M)	TOSHIBA
IC506	TC74HC04AF	I.C.(M)	TOSHIBA
IC507	TC4538BF	I.C.(M)	TOSHIBA
IC508	TC4538BF	I.C.(M)	TOSHIBA
IC509	TC4538BF	I.C.(M)	TOSHIBA
IC510	TC74HC32AF	I.C.(M)	TOSHIBA
IC511	TC4053BF	I.C.(M)	TOSHIBA
IC512	TC4053BF	I.C.(M)	TOSHIBA
IC513	M5218AFP	I.C.(M)	MITSUBISHI
IC514	UPC393G2	I.C.(M)	NEC
IC515	UPC393G2	I.C.(M)	NEC
IC516	TC4053BF	I.C.(M)	TOSHIBA
IC517	TC4013BF	I.C.(M)	TOSHIBA
IC518	TC74HC04AF	I.C.(M)	TOSHIBA
IC519	TC74HC32AF	I.C.(M)	TOSHIBA
IC520	TC74HC08AF	I.C.(M)	TOSHIBA

Symbol No.	Part No.	Part Name	Description	
IC521	TC4538BF	I.C.(M)	TOSHIBA	
IC522	TC74HC04AF	I.C.(M)	TOSHIBA	
IC523	TC4013BF	I.C.(M)	TOSHIBA	
IC524	TC7WU04F	I.C.(M)	TOSHIBA	
IC801	UPD6454GT-101	I.C.(M)	NEC	
IC804	TC7W08F	I.C.(M)	TOSHIBA	
Q501	DTC124EK	TRANSISTOR	ROHM	
Q502	DTC124EK	TRANSISTOR	ROHM	
D101	DAN202K	DIODE	ROHM	
D102	DAN202K	DIODE	ROHM	
D501	DA204K	DIODE	ROHM	
R101	NRSA63J-563	M.G.RESISTOR	56K	1/16W
R102	NRSA63J-223	M.G.RESISTOR	22K	1/16W
R103	NRSA63J-0R0	M.G.RESISTOR	0	1/16W
R105	NRSA63J-102	M.G.RESISTOR	1.0K	1/16W
R106	NRSA63J-101	M.G.RESISTOR	100	1/16W
R107	NRSA63J-101	M.G.RESISTOR	100	1/16W
R108	NRSA63J-101	M.G.RESISTOR	100	1/16W
R109	NRSA63J-101	M.G.RESISTOR	100	1/16W
R110	NRSA63J-101	M.G.RESISTOR	100	1/16W
R111	NRSA63J-101	M.G.RESISTOR	100	1/16W
R112	NRSA63J-101	M.G.RESISTOR	100	1/16W
R113	NRSA63J-101	M.G.RESISTOR	100	1/16W
R114	NRSA63J-101	M.G.RESISTOR	100	1/16W
R115	NRSA63J-101	M.G.RESISTOR	100	1/16W
R116	NRSA63J-101	M.G.RESISTOR	100	1/16W
R117	NRSA63J-101	M.G.RESISTOR	100	1/16W
R118	NRSA63J-101	M.G.RESISTOR	100	1/16W
R119	NRSA63J-101	M.G.RESISTOR	100	1/16W
R120	NRSA63J-101	M.G.RESISTOR	100	1/16W
R121	NRSA63J-101	M.G.RESISTOR	100	1/16W
R122	NRSA63J-101	M.G.RESISTOR	100	1/16W
R123	NRSA63J-101	M.G.RESISTOR	100	1/16W
R124	NRSA63J-101	M.G.RESISTOR	100	1/16W
R125	NRSA63J-101	M.G.RESISTOR	100	1/16W
R126	NRSA63J-101	M.G.RESISTOR	100	1/16W
R127	NRSA63J-101	M.G.RESISTOR	100	1/16W
R129	NRSA63J-101	M.G.RESISTOR	100	1/16W
R130	NRSA63J-101	M.G.RESISTOR	100	1/16W
R131	NRSA63J-101	M.G.RESISTOR	100	1/16W
R132	NRSA63J-101	M.G.RESISTOR	100	1/16W
R133	NRSA63J-101	M.G.RESISTOR	100	1/16W
R134	NRSA63J-101	M.G.RESISTOR	100	1/16W
R135	NRSA63J-101	M.G.RESISTOR	100	1/16W
R136	NRSA63J-101	M.G.RESISTOR	100	1/16W
R137	NRSA63J-101	M.G.RESISTOR	100	1/16W
R138	NRSA63J-101	M.G.RESISTOR	100	1/16W
R139	NRSA63J-101	M.G.RESISTOR	100	1/16W
R140	NRSA63J-101	M.G.RESISTOR	100	1/16W
R141	NRSA63J-101	M.G.RESISTOR	100	1/16W
R142	NRSA63J-101	M.G.RESISTOR	100	1/16W
R143	NRSA63J-101	M.G.RESISTOR	100	1/16W
R144	NRSA63J-101	M.G.RESISTOR	100	1/16W
R145	NRSA63J-0R0	M.G.RESISTOR	0	1/16W
R147	NRSA63J-0R0	M.G.RESISTOR	0	1/16W

Symbol No.	Part No.	Part Name	Description	
R148	NRSA63J-473	M.G.RESISTOR	47K	1/16W
R149	NRSA63J-473	M.G.RESISTOR	47K	1/16W
R150	NRSA63J-222	M.G.RESISTOR	2.2K	1/16W
R151	NRSA63J-473	M.G.RESISTOR	47K	1/16W
R152	NRSA63J-473	M.G.RESISTOR	47K	1/16W
R153	NRSA63J-473	M.G.RESISTOR	47K	1/16W
R154	NRSA63J-222	M.G.RESISTOR	2.2K	1/16W
R155	NRSA63J-222	M.G.RESISTOR	2.2K	1/16W
R156	NRSA63J-473	M.G.RESISTOR	47K	1/16W
R161	NRSA63J-105	M.G.RESISTOR	1.0M	1/16W
R162	NRSA63J-105	M.G.RESISTOR	1.0M	1/16W
R165	NRSA63J-0R0	M.G.RESISTOR	0	1/16W
R166	NRSA63J-0R0	M.G.RESISTOR	0	1/16W
R167	NRSA63J-0R0	M.G.RESISTOR	0	1/16W
R168	NRSA63J-0R0	M.G.RESISTOR	0	1/16W
R169	NRSA63J-0R0	M.G.RESISTOR	0	1/16W
R170	NRSA63J-101	M.G.RESISTOR	100	1/16W
R171	NRSA63J-103	M.G.RESISTOR	10K	1/16W
R172	NRSA63J-105	M.G.RESISTOR	1.0M	1/16W
R173	NRSA63J-105	M.G.RESISTOR	1.0M	1/16W
R174	NRSA63J-0R0	M.G.RESISTOR	0	1/16W
R175	NRSA63J-0R0	M.G.RESISTOR	0	1/16W
R176	NRSA63J-102	M.G.RESISTOR	1.0K	1/16W
R177	NRSA63J-103	M.G.RESISTOR	10K	1/16W
R178	NRSA63J-102	M.G.RESISTOR	1.0K	1/16W
R179	NRSA63J-103	M.G.RESISTOR	10K	1/16W
R180	NRSA63J-102	M.G.RESISTOR	1.0K	1/16W
R181	NRSA63J-101	M.G.RESISTOR	100	1/16W
R182	NRSA63J-0R0	M.G.RESISTOR	0	1/16W
R183	NRSA63J-0R0	M.G.RESISTOR	0	1/16W
R184	NRSA63J-0R0	M.G.RESISTOR	0	1/16W
R185	NRSA63J-0R0	M.G.RESISTOR	0	1/16W
R186	NRSA63J-0R0	M.G.RESISTOR	0	1/16W
R187	NRSA63J-0R0	M.G.RESISTOR	0	1/16W
R188	NRSA63J-0R0	M.G.RESISTOR	0	1/16W
R189	NRSA63J-0R0	M.G.RESISTOR	0	1/16W
R190	NRSA63J-0R0	M.G.RESISTOR	0	1/16W
R196	NRSA63J-101	M.G.RESISTOR	100	1/16W
R197	NRSA63J-101	M.G.RESISTOR	100	1/16W
R198	NRSA63J-101	M.G.RESISTOR	100	1/16W
R199	NRSA63J-101	M.G.RESISTOR	100	1/16W
R501	NRSA63J-104	M.G.RESISTOR	100K	1/16W
R502	NRSA63J-104	M.G.RESISTOR	100K	1/16W
R503	NRSA63J-101	M.G.RESISTOR	100	1/16W
R504	NRSA63J-222	M.G.RESISTOR	2.2K	1/16W
R505	NRSA63J-222	M.G.RESISTOR	2.2K	1/16W
R506	NRSA63J-103	M.G.RESISTOR	10K	1/16W
R507	NRSA63J-103	M.G.RESISTOR	10K	1/16W
R508	NRSA63J-103	M.G.RESISTOR	10K	1/16W
R509	NRSA63J-104	M.G.RESISTOR	100K	1/16W
R510	NRSA63J-103	M.G.RESISTOR	10K	1/16W
R511	NRSA63J-222	M.G.RESISTOR	2.2K	1/16W
R512	NRSA63J-222	M.G.RESISTOR	2.2K	1/16W
R513	NRSA63J-103	M.G.RESISTOR	10K	1/16W
R514	NRSA63J-103	M.G.RESISTOR	10K	1/16W
R515	NRSA63J-103	M.G.RESISTOR	10K	1/16W
R516	NRSA63J-222	M.G.RESISTOR	2.2K	1/16W
R517	NRSA63J-101	M.G.RESISTOR	100	1/16W
R518	NRSA63J-471	M.G.RESISTOR	470	1/16W

Symbol No.	Part No.	Part Name	Description	
R520	NRSA63J-104	M.G.RESISTOR	100K	1/16W
R521	NRSA63J-104	M.G.RESISTOR	100K	1/16W
R522	NRSA63J-104	M.G.RESISTOR	100K	1/16W
R523	NRSA63J-105	M.G.RESISTOR	1.0M	1/16W
R524	NRSA63J-104	M.G.RESISTOR	100K	1/16W
R525	NRSA63J-223	M.G.RESISTOR	22K	1/16W
R526	NRSA63J-563	M.G.RESISTOR	56K	1/16W
R527	NRSA63J-103	M.G.RESISTOR	10K	1/16W
R528	NRSA63J-103	M.G.RESISTOR	10K	1/16W
R529	NRSA63J-103	M.G.RESISTOR	10K	1/16W
R530	NRSA63J-103	M.G.RESISTOR	10K	1/16W
R531	NRSA63J-103	M.G.RESISTOR	10K	1/16W
R532	NRSA63J-473	M.G.RESISTOR	47K	1/16W
R533	NRSA63J-822	M.G.RESISTOR	8.2K	1/16W
R534	NRSA63J-153	M.G.RESISTOR	15K	1/16W
R535	NRSA63J-274	M.G.RESISTOR	270K	1/16W
R536	NRSA63J-102	M.G.RESISTOR	1.0K	1/16W
R537	NRSA63J-222	M.G.RESISTOR	2.2K	1/16W
R538	NRSA63J-103	M.G.RESISTOR	10K	1/16W
R539	NRSA63J-103	M.G.RESISTOR	10K	1/16W
R540	NRSA63J-103	M.G.RESISTOR	10K	1/16W
R541	NRSA63J-182	M.G.RESISTOR	1.8K	1/16W
R542	NRSA63J-102	M.G.RESISTOR	1.0K	1/16W
R543	NRSA63J-272	M.G.RESISTOR	2.7K	1/16W
R544	NRSA63J-103	M.G.RESISTOR	10K	1/16W
R545	NRSA63J-750	M.G.RESISTOR	75	1/16W
R546	NRSA63J-102	M.G.RESISTOR	1.0K	1/16W
R547	NRSA63J-104	M.G.RESISTOR	100K	1/16W
R548	NRSA63J-104	M.G.RESISTOR	100K	1/16W
R549	NRSA63J-104	M.G.RESISTOR	100K	1/16W
R550	NRSA63J-0R0	M.G.RESISTOR	0	1/16W
R551	NRSA63J-681	M.G.RESISTOR	680	1/16W
R552	NRSA63J-104	M.G.RESISTOR	100K	1/16W
R553	NRSA63J-104	M.G.RESISTOR	100K	1/16W
R554	NRSA63J-104	M.G.RESISTOR	100K	1/16W
R555	NRSA63J-104	M.G.RESISTOR	100K	1/16W
R558	NRSA63J-104	M.G.RESISTOR	100K	1/16W
R559	NRSA63J-104	M.G.RESISTOR	100K	1/16W
R560	NRSA63J-104	M.G.RESISTOR	100K	1/16W
R561	NRSA63J-104	M.G.RESISTOR	100K	1/16W
R562	NRSA63J-104	M.G.RESISTOR	100K	1/16W
R563	NRSA63J-104	M.G.RESISTOR	100K	1/16W
R564	NRSA63J-104	M.G.RESISTOR	100K	1/16W
R565	NRSA63J-104	M.G.RESISTOR	100K	1/16W
R566	NRSA63J-104	M.G.RESISTOR	100K	1/16W
R567	NRSA63J-104	M.G.RESISTOR	100K	1/16W
R568	NRSA63J-104	M.G.RESISTOR	100K	1/16W
R569	NRSA63J-104	M.G.RESISTOR	100K	1/16W
R570	NRSA63J-104	M.G.RESISTOR	100K	1/16W
R571	NRSA63J-104	M.G.RESISTOR	100K	1/16W
R572	NRSA63J-472	M.G.RESISTOR	4.7K	1/16W
R573	NRSA63J-104	M.G.RESISTOR	100K	1/16W
R574	NRSA63J-102	M.G.RESISTOR	1.0K	1/16W
R575	NRSA63J-102	M.G.RESISTOR	1.0K	1/16W
R576	NRSA63J-104	M.G.RESISTOR	100K	1/16W
R577	NRSA63J-104	M.G.RESISTOR	100K	1/16W
R578	NRSA63J-104	M.G.RESISTOR	100K	1/16W
R579	NRSA63J-104	M.G.RESISTOR	100K	1/16W
R580	NRSA63J-102	M.G.RESISTOR	1K	1/16W

SYS/TC]

Symbol No.	Part No.	Part Name	Description
R803	NRSA63J-181	M.G.RESISTOR	180 1/16W
R804	NRSA63J-181	M.G.RESISTOR	180 1/16W
R805	NRSA63J-181	M.G.RESISTOR	180 1/16W
R806	NRSA63J-152	M.G.RESISTOR	1.5K 1/16W
R808	NRSA63J-473	M.G.RESISTOR	47K 1/16W
R809	NRSA63J-102	M.G.RESISTOR	1.0K 1/16W
R810	NRSA63J-684	M.G.RESISTOR	680K 1/16W
R811	NRSA63J-822	M.G.RESISTOR	8.2K 1/16W
R812	NRSA63J-563	M.G.RESISTOR	56K 1/16W
R813	NRSA63J-562	M.G.RESISTOR	5.6K 1/16W
R814	NRSA63J-102	M.G.RESISTOR	1.0K 1/16W
R815	NRSA63J-102	M.G.RESISTOR	1.0K 1/16W
VR801	NVP1416-104	TRIM.RESISTOR	CHARA POSI
RA101	EXBA10E473J	RESISTOR ARRAY	
RA102	EXBA10E472J	RESISTOR ARRAY	
RA103	EXBA10E472J	RESISTOR ARRAY	
RA104	EXBA10E103J	RESISTOR ARRAY	
RA105	EXBA10E103J	RESISTOR ARRAY	
C101	NEH91CM-226	E.CAPACITOR	22 16V
C102	NEH91CM-226	E.CAPACITOR	22 16V
C105	NCB31HK-103	CER.CAPACITOR	0.010 50V
C106	NCB31HK-103	CER.CAPACITOR	0.010 50V
C109	NCF31CZ-104	CER.CAPACITOR	0.10 16V
C111	NCB31HK-103	CER.CAPACITOR	0.010 50V
C112	NCT06CH-100	CER.CAPACITOR	10P 50V
C113	NCT06CH-100	CER.CAPACITOR	10P 50V
C114	NCF31CZ-104	CER.CAPACITOR	0.10 16V
C115	NCF31CZ-104	CER.CAPACITOR	0.10 16V
C116	NCS31HJ-101	CER.CAPACITOR	100P 50V
C117	NCS31HJ-101	CER.CAPACITOR	100P 50V
C118	NCF31CZ-104	CER.CAPACITOR	0.10 16V
C119	NCF31CZ-104	CER.CAPACITOR	0.10 16V
C120	NCF31CZ-104	CER.CAPACITOR	0.10 16V
C121	NCS31HJ-101	CER.CAPACITOR	100P 50V
C122	NCS31HJ-101	CER.CAPACITOR	100P 50V
C123	NCS31HJ-101	CER.CAPACITOR	100P 50V
C124	NCS31HJ-101	CER.CAPACITOR	100P 50V
C125	NCS31HJ-101	CER.CAPACITOR	100P 50V
C126	NCS31HJ-101	CER.CAPACITOR	100P 50V
C127	NCS31HJ-101	CER.CAPACITOR	100P 50V
C128	NCS31HJ-101	CER.CAPACITOR	100P 50V
C129	NCS31HJ-101	CER.CAPACITOR	100P 50V
C130	NCS31HJ-101	CER.CAPACITOR	100P 50V
C131	NCS31HJ-101	CER.CAPACITOR	100P 50V
C132	NCS31HJ-101	CER.CAPACITOR	100P 50V
C133	NCS31HJ-101	CER.CAPACITOR	100P 50V
C134	NCS31HJ-101	CER.CAPACITOR	100P 50V
C135	NCS31HJ-101	CER.CAPACITOR	100P 50V
C136	NCS31HJ-101	CER.CAPACITOR	100P 50V
C137	NCS31HJ-101	CER.CAPACITOR	100P 50V
C138	NCS31HJ-101	CER.CAPACITOR	100P 50V
C139	NCS31HJ-101	CER.CAPACITOR	100P 50V
C140	NCS31HJ-101	CER.CAPACITOR	100P 50V
C141	NCS31HJ-101	CER.CAPACITOR	100P 50V
C142	NCS31HJ-101	CER.CAPACITOR	100P 50V

Symbol No.	Part No.	Part Name	Description
C143	NCS31HJ-101	CER.CAPACITOR	100P 50V
C144	NCS31HJ-101	CER.CAPACITOR	100P 50V
C145	NCF31CZ-104	CER.CAPACITOR	0.10 16V
C146	NCF31CZ-104	CER.CAPACITOR	0.10 16V
C147	NCF31CZ-104	CER.CAPACITOR	0.10 16V
C148	NCF31CZ-104	CER.CAPACITOR	0.10 16V
C149	NCF31CZ-104	CER.CAPACITOR	0.10 16V
C150	NCF31CZ-104	CER.CAPACITOR	0.10 16V
C151	NCF31CZ-104	CER.CAPACITOR	0.10 16V
C152	NCT06CH-180	CER.CAPACITOR	18P 50V
C153	NCT06CH-150	CER.CAPACITOR	15P 50V
C154	NCF31CZ-104	CER.CAPACITOR	0.10 16V
C155	NCS31HJ-101	CER.CAPACITOR	100P 50V
C156	NCS31HJ-101	CER.CAPACITOR	100P 50V
C157	NCS31HJ-101	CER.CAPACITOR	100P 50V
C158	NCS31HJ-101	CER.CAPACITOR	100P 50V
C159	NCS31HJ-101	CER.CAPACITOR	100P 50V
C160	NCF31CZ-104	CER.CAPACITOR	0.10 16V
C161	NCF31CZ-104	CER.CAPACITOR	0.10 16V
C162	NCF31CZ-104	CER.CAPACITOR	0.10 16V
C163	NCF31CZ-104	CER.CAPACITOR	0.10 16V
C164	NCS31HJ-101	CER.CAPACITOR	100P 50V
C165	NCF31CZ-104	CER.CAPACITOR	0.10 16V
C166	NCF31CZ-104	CER.CAPACITOR	0.10 16V
C167	NCS31HJ-101	CER.CAPACITOR	100P 50V
C168	NCS31HJ-101	CER.CAPACITOR	100P 50V
C169	NCS31HJ-101	CER.CAPACITOR	100P 50V
C170	NCS31HJ-101	CER.CAPACITOR	100P 50V
C171	NCS31HJ-101	CER.CAPACITOR	100P 50V
C172	NCS31HJ-101	CER.CAPACITOR	100P 50V
C173	NCS31HJ-101	CER.CAPACITOR	100P 50V
C174	NCS31HJ-101	CER.CAPACITOR	100P 50V
C175	NCS31HJ-101	CER.CAPACITOR	100P 50V
C176	NCS31HJ-101	CER.CAPACITOR	100P 50V
C177	NCS31HJ-101	CER.CAPACITOR	100P 50V
C178	NCS31HJ-101	CER.CAPACITOR	100P 50V
C179	NCS31HJ-101	CER.CAPACITOR	100P 50V
C180	NCS31HJ-101	CER.CAPACITOR	100P 50V
C181	NCS31HJ-101	CER.CAPACITOR	100P 50V
C182	NCS31HJ-101	CER.CAPACITOR	100P 50V
C183	NCS31HJ-101	CER.CAPACITOR	100P 50V
C184	NCS31HJ-101	CER.CAPACITOR	100P 50V
C185	NCS31HJ-101	CER.CAPACITOR	100P 50V
C186	NCS31HJ-101	CER.CAPACITOR	100P 50V
C187	NCS31HJ-101	CER.CAPACITOR	100P 50V
C188	NCS31HJ-101	CER.CAPACITOR	100P 50V
C189	NCS31HJ-101	CER.CAPACITOR	100P 50V
C190	NCS31HJ-101	CER.CAPACITOR	100P 50V
C191	NCF31CZ-104	CER.CAPACITOR	0.10 16V
C192	NCF31CZ-104	CER.CAPACITOR	0.10 16V
C193	NCB31HK-103	CER.CAPACITOR	0.010 50V
C194	NCF31CZ-104	CER.CAPACITOR	0.10 16V
C195	NCF31CZ-104	CER.CAPACITOR	0.10 16V
C196	NCT06CH-120	CER.CAPACITOR	12P 50V
C197	NCT06CH-100	CER.CAPACITOR	10P 50V
C198	NCF31CZ-104	CER.CAPACITOR	0.10 16V
C199	NCF31CZ-104	CER.CAPACITOR	0.10 16V
C211	NEH91CM-226	E.CAPACITOR	22 16V
C212	NEH91CM-226	E.CAPACITOR	22 16V

Symbol No.	Part No.	Part Name	Description	
C213	NEF11CM-226	TAN.CAPACITOR	22	16V
C214	NEF11CM-226	TAN.CAPACITOR	22	16V
C215	NEF11CM-226	TAN.CAPACITOR	22	16V
C501	NCB31HK-103	CER.CAPACITOR	0.010	50V
C502	NFV41CJ-472	FILM CAPACITOR	4700P	16V
C503	NCB31HK-103	CER.CAPACITOR	0.010	50V
C504	NFV41CJ-472	FILM CAPACITOR	4700P	16V
C505	NCB31HK-103	CER.CAPACITOR	0.010	50V
C506	NFV41HJ-152	FILM CAPACITOR	1500P	50V
C507	NCB31HK-103	CER.CAPACITOR	0.010	50V
C508	NFV41CJ-472	FILM CAPACITOR	4700P	16V
C509	NFV41CJ-472	FILM CAPACITOR	4700P	16V
C510	NCB31HK-103	CER.CAPACITOR	0.010	50V
C511	NFV41HJ-152	FILM CAPACITOR	1500P	50V
C512	NCB31EK-223	CER.CAPACITOR	0.022	25V
C513	NCT06CH-331	CER.CAPACITOR	330P	50V
C514	NCT06CH-101	CER.CAPACITOR	100P	50V
C515	NCT06CH-101	CER.CAPACITOR	100P	50V
C516	NCB31HK-103	CER.CAPACITOR	0.010	50V
C517	NCT06CH-120	CER.CAPACITOR	12P	50V
C518	NCT06CH-270	CER.CAPACITOR	27P	50V
C519	NCB31HK-102	CER.CAPACITOR	1000P	50V
C520	NEF11EM-474	TAN.CAPACITOR	0.47	25V
C521	NEF11AM-475	TAN.CAPACITOR	4.7	10V
C522	NCB31HK-103	CER.CAPACITOR	0.010	50V
C523	NCB31HK-103	CER.CAPACITOR	0.010	50V
C524	NCB31HK-103	CER.CAPACITOR	0.010	50V
C525	NEH91CM-476	E.CAPACITOR	47	16V
C526	NEF11EM-474	TAN.CAPACITOR	0.47	25V
C527	NEH91CM-226	E.CAPACITOR	22	16V
C528	NCB31HK-103	CER.CAPACITOR	0.010	50V
C529	NCB31HK-103	CER.CAPACITOR	0.010	50V
C530	NEN21AM-336	NP.CAPACITOR	33	10V
C534	NCB31HK-103	CER.CAPACITOR	0.010	50V
C535	NEH51AM-227	E.CAPACITOR	220	10V
C536	NCB31HK-103	CER.CAPACITOR	0.010	50V
C537	NCB31HK-103	CER.CAPACITOR	0.010	50V
C538	NCB31HK-103	CER.CAPACITOR	0.010	50V
C539	NCT06CH-270	CER.CAPACITOR	27P	50V
C540	NCT06CH-470	CER.CAPACITOR	47P	50V
C541	NEH91CM-476	E.CAPACITOR	47	16V
C542	NCB31HK-103	CER.CAPACITOR	0.010	50V
C543	NCB31EK-223	CER.CAPACITOR	0.022	25V
C544	NCB31HK-103	CER.CAPACITOR	0.010	50V
C545	NCB31HK-103	CER.CAPACITOR	0.010	50V
C546	NCB31CK-333	CER.CAPACITOR	0.033	16V
C547	NCB31HK-103	CER.CAPACITOR	0.010	50V
C548	NCB31HK-103	CER.CAPACITOR	0.010	50V
C549	NCB31HK-103	CER.CAPACITOR	0.010	50V
C550	NCB31HK-103	CER.CAPACITOR	0.010	50V
C552	NCB31HK-103	CER.CAPACITOR	0.010	50V
C553	NCB31HK-102	CER.CAPACITOR	1000P	50V
C801	NCB31HK-103	CER.CAPACITOR	0.010	50V
C802	NCB31HK-103	CER.CAPACITOR	0.010	50V
C803	NCB31HK-103	CER.CAPACITOR	0.010	50V
C804	NCT06CH-330	CER.CAPACITOR	33P	50V
C805	NCT06CH-330	CER.CAPACITOR	33P	50V
C806	NCB31HK-103	CER.CAPACITOR	0.010	50V
C809	NCT06CH-330	CER.CAPACITOR	33P	50V

Symbol No.	Part No.	Part Name	Description	
C810	NFV41HJ-222	FILM CAPACITOR	2200P	50V
C811	NFV41CJ-103	FILM CAPACITOR	0.010	16V
C812	NEH51EM-107	E.CAPACITOR	100	25V
C813	NEH91CM-106	E.CAPACITOR	10	16V
C814	NEN21HM-105	NP.CAPACITOR	1.0	50V
C815	NEF11CM-335	TAN.CAPACITOR	3.3	16V
L101	SSV2810-101	COIL	100μ	
L501	PGZ00638-101	COIL	100μ	
L801	PU58201-270	COIL	27μ	
LC801	PGZ01972	NOISE FILTER		
X101	PGZ02216	CRYSTAL	24.576MHz	
X102	PGZ00513	CERAMIC FILTER	12MHz	
X103	PGZ01561	CRYSTAL	9.8304MHz	
X501	PGZ02217	CRYSTAL	12MHz	
X502	PGZ02218	CRYSTAL	14.318180MHz	
CN1	PGZ02142-120	CONNECTOR	120PIN	
CN2	PGZ02142-100	CONNECTOR	100PIN	
TP101	SCV1880-001	TEST POINT		
TP102	SCV1880-001	TEST POINT		
TP103	SCV1880-001	TEST POINT		
TP104	SCV1880-001	TEST POINT		
TP105	SCV1880-001	TEST POINT		
TP106	SCV1880-001	TEST POINT		
TP107	SCV1880-001	TEST POINT		
TP108	SCV1880-001	TEST POINT		
TP109	SCV1880-001	TEST POINT		
TP110	SCV1880-001	TEST POINT		
TP111	SCV1880-001	TEST POINT		
TP112	SCV1880-001	TEST POINT		
TP113	SCV1880-001	TEST POINT		
TP114	SCV1880-001	TEST POINT		
TP115	SCV1880-001	TEST POINT		
TP116	SCV1880-001	TEST POINT		
TP117	SCV1880-001	TEST POINT		
TP118	SCV1880-001	TEST POINT		
TP119	SCV1880-001	TEST POINT		
TP120	SCV1880-001	TEST POINT		
TP121	SCV1880-001	TEST POINT		
TP122	SCV1880-001	TEST POINT		
TP123	SCV1880-001	TEST POINT		
TP124	SCV1880-001	TEST POINT		
TP125	SCV1880-001	TEST POINT		
TP126	SCV1880-001	TEST POINT		
TP128	SCV1880-001	TEST POINT		
TP129	SCV1880-001	TEST POINT		
TP130	SCV1880-001	TEST POINT		
TP131	SCV1880-001	TEST POINT		
TP132	SCV1880-001	TEST POINT		
TP133	SCV1880-001	TEST POINT		
TP134	SCV1880-001	TEST POINT		
TP135	SCV1880-001	TEST POINT		
TP136	SCV1880-001	TEST POINT		

[SYS/TC]

Symbol No.	Part No.	Part Name	Description
TP137	SCV1880-001	TEST POINT	
TP138	SCV1880-001	TEST POINT	
TP501	SCV1880-001	TEST POINT	
TP502	SCV1880-001	TEST POINT	
TP503	SCV1880-001	TEST POINT	
TP504	SCV1880-001	TEST POINT	
TP505	SCV1880-001	TEST POINT	
TP506	SCV1880-001	TEST POINT	
TP507	SCV1880-001	TEST POINT	
TP508	SCV1880-001	TEST POINT	
TP509	SCV1880-001	TEST POINT	
TP510	SCV1880-001	TEST POINT	
TP511	SCV1880-001	TEST POINT	
TP512	SCV1880-001	TEST POINT	
TP513	SCV1880-001	TEST POINT	
TP514	SCV1880-001	TEST POINT	
TP516	SCV1880-001	TEST POINT	
TP517	SCV1880-001	TEST POINT	
TP518	SCV1880-001	TEST POINT	
TP519	SCV1880-001	TEST POINT	
TP520	SCV1880-001	TEST POINT	
TP521	SCV1880-001	TEST POINT	
TP522	SCV1880-001	TEST POINT	
TP523	SCV1880-001	TEST POINT	
TP524	SCV1880-001	TEST POINT	
TP525	SCV1880-001	TEST POINT	
TP526	SCV1880-001	TEST POINT	
TP527	SCV1880-001	TEST POINT	
TP528	SCV1880-001	TEST POINT	
TP529	SCV1880-001	TEST POINT	
TP530	SCV1880-001	TEST POINT	
TP531	SCV1880-001	TEST POINT	
TP534	SCV1880-001	TEST POINT	
TP535	SCV1880-001	TEST POINT	
TP801	SCV1880-001	TEST POINT	
TP802	SCV1880-001	TEST POINT	
K101	PGZ00627	FERRATE BEADS	
K103	PGZ00627	FERRATE BEADS	
K501	PGZ00627	FERRATE BEADS	
K502	PGZ00627	FERRATE BEADS	
K504	PGZ00627	FERRATE BEADS	
K505	PGZ00627	FERRATE BEADS	
SL1	PRD20530	SHIELD CASE	
SC1	DPSP2606Z	SCREW	M2.6×6
SP1	PGZ00582	SPACER	

6.16 OPERATION BOARD ASSEMBLY LIST [3][2]

SLK1022-01-A1A [3][2]□□□□□□□

Symbol No.	Part No.	Part Name	Description
IC1	UPD78P58YGC-301	I.C.(M)	NEC
IC2	M66311FP	I.C.(M)	MITSUBISHI
IC3	M66311FP	I.C.(M)	MITSUBISHI
IC4	M66311FP	I.C.(M)	MITSUBISHI
IC5	M66311FP	I.C.(M)	MITSUBISHI
IC6	M66311FP	I.C.(M)	MITSUBISHI
IC7	M5218AFP	I.C.(M)	MITSUBISHI
IC8	ADC1034CIWM	I.C.(M)	NS
IC9	MSM6338MS	I.C.(M)	OKI
IC10	BR24C02F	I.C.(M)	ROHM
IC11	UPC78L12T	I.C.(M)	NEC
Q1	DTB143TK	TRANSISTOR	ROHM
Q2	DTB143TK	TRANSISTOR	ROHM
Q3	DTB143TK	TRANSISTOR	ROHM
Q4	DTB143TK	TRANSISTOR	ROHM
Q5	DTB143TK	TRANSISTOR	ROHM
Q6	DTB143TK	TRANSISTOR	ROHM
Q7	DTB143TK	TRANSISTOR	ROHM
Q8	DTB143TK	TRANSISTOR	ROHM
Q9	DTC144EK	TRANSISTOR	ROHM
Q10	DTC144EK	TRANSISTOR	ROHM
Q11	DTC144EK	TRANSISTOR	ROHM
Q12	DTC144EK	TRANSISTOR	ROHM
Q13	DTC144EK	TRANSISTOR	ROHM
Q14	DTC144EK	TRANSISTOR	ROHM
Q15	DTC144EK	TRANSISTOR	ROHM
Q16	DTC144EK	TRANSISTOR	ROHM
D1	DAN202K	DIODE	ROHM
D2	DAN202K	DIODE	ROHM
D3	DAN202K	DIODE	ROHM
D4	DAN202K	DIODE	ROHM
D5	DAN202K	DIODE	ROHM
D6	DAN202K	DIODE	ROHM
D7	DAN202K	DIODE	ROHM
D8	DAN202K	DIODE	ROHM
D9	DAN202K	DIODE	ROHM
D11	DAN202K	DIODE	ROHM
D12	DAN202K	DIODE	ROHM
D13	DAN202K	DIODE	ROHM
D14	DAN202K	DIODE	ROHM
D15	DAN202K	DIODE	ROHM
D16	DAN202K	DIODE	ROHM
D17	LB-302VF2	LED	ROHM
D18	LB-302VF2	LED	ROHM
D19	LB-302VF2	LED	ROHM
D20	LB-302VF2	LED	ROHM
D21	LD-010YW	LED	ROHM
D22	LD-010YW	LED	ROHM
D23	LD-010YW	LED	ROHM
D24	LD-010YW	LED	ROHM
D25	LD-201VR	LED	ROHM
D27	LD-201VR	LED	ROHM
D29	SLR-55MC3F	LED	ROHM
D30	SLR-55MC3F	LED	ROHM
D31	SLR-55MC3F	LED	ROHM
D32	SLR-55MC3F	LED	ROHM
D33	SLR-55MC3F	LED	ROHM

Symbol No.	Part No.	Part Name	Description	
D34	SLR-55MC3F	LED	ROHM	
D35	SLR-55MC3F	LED	ROHM	
D36	SLR-55MC3F	LED	ROHM	
D37	SLR-55MC3F	LED	ROHM	
D38	SLR-55MC3F	LED	ROHM	
D39	SLR-55YC3F	LED	ROHM	
D40	SLR-55YC3F	LED	ROHM	
D41	SLR-55MC3F	LED	ROHM	
D42	SLR-55MC3F	LED	ROHM	
D43	SLR-55VC3F	LED	ROHM	
D44	SLR-55VC3F	LED	ROHM	
D45	SLR-55MC3F	LED	ROHM	
D46	SLR-55MC3F	LED	ROHM	
D49	SLR-55MC3F	LED	ROHM	
D50	SLR-55YC3F	LED	ROHM	
D51	SLR-55VC3F	LED	ROHM	
D52	SLR-55MC3F	LED	ROHM	
D53	SLR-55MC3F	LED	ROHM	
D56	AY5307S	LED(YELLOW)	SUTANREI	
D57	PG5307S	LED(GREEN)	SUTANREI	
D58	SLR-55VC3F	LED	ROHM	
D59	AY5307S	LED(YELLOW)	SUTANREI	
D60	AY5307S	LED(YELLOW)	SUTANREI	
D61	AY5307S	LED(YELLOW)	SUTANREI	
D62	AY5307S	LED(YELLOW)	SUTANREI	
D63	PG5307S	LED(GREEN)	SUTANREI	
D64	AY5307S	LED(YELLOW)	SUTANREI	
R1	NRSA02J-123	M.G.RESISTOR	12K	1/10W
R2	NRSA02J-0R0	M.G.RESISTOR	0	1/10W
R3	NRSA02J-472	M.G.RESISTOR	4.7K	1/10W
R4	NRSA02J-472	M.G.RESISTOR	4.7K	1/10W
R5	NRSA02J-104	M.G.RESISTOR	100K	1/10W
R6	NRSA02J-104	M.G.RESISTOR	100K	1/10W
R7	NRSA02J-104	M.G.RESISTOR	100K	1/10W
R8	NRSA02J-104	M.G.RESISTOR	100K	1/10W
R9	NRSA02J-331	M.G.RESISTOR	330	1/10W
R10	NRSA02J-331	M.G.RESISTOR	330	1/10W
R11	NRSA02J-331	M.G.RESISTOR	330	1/10W
R12	NRSA02J-331	M.G.RESISTOR	330	1/10W
R13	NRSA02J-331	M.G.RESISTOR	330	1/10W
R14	NRSA02J-331	M.G.RESISTOR	330	1/10W
R15	NRSA02J-331	M.G.RESISTOR	330	1/10W
R16	NRSA02J-331	M.G.RESISTOR	330	1/10W
R17	NRSA02J-331	M.G.RESISTOR	330	1/10W
R18	NRSA02J-331	M.G.RESISTOR	330	1/10W
R19	NRSA02J-331	M.G.RESISTOR	330	1/10W
R20	NRSA02J-331	M.G.RESISTOR	330	1/10W
R21	NRSA02J-331	M.G.RESISTOR	330	1/10W
R22	NRSA02J-331	M.G.RESISTOR	330	1/10W
R23	NRSA02J-331	M.G.RESISTOR	330	1/10W
R24	NRSA02J-331	M.G.RESISTOR	330	1/10W
R25	NRSA02J-121	M.G.RESISTOR	120	1/10W
R26	NRSA02J-103	M.G.RESISTOR	10K	1/10W
R27	NRSA02J-103	M.G.RESISTOR	10K	1/10W
R28	NRSA02J-102	M.G.RESISTOR	1.0K	1/10W
R29	NRSA02J-101	M.G.RESISTOR	100	1/10W
R30	NRSA02J-101	M.G.RESISTOR	100	1/10W
R31	NRSA02J-101	M.G.RESISTOR	100	1/10W

Symbol No.	Part No.	Part Name	Description	
R32	NRSA02J-121	M.G.RESISTOR	120	1/10W
R33	NRSA02J-121	M.G.RESISTOR	120	1/10W
R34	NRSA02J-121	M.G.RESISTOR	120	1/10W
R35	NRSA02J-121	M.G.RESISTOR	120	1/10W
R36	NRSA02J-121	M.G.RESISTOR	120	1/10W
R37	NRSA02J-121	M.G.RESISTOR	120	1/10W
R38	NRSA02J-121	M.G.RESISTOR	120	1/10W
R39	NRSA02J-121	M.G.RESISTOR	120	1/10W
R40	NRSA02J-121	M.G.RESISTOR	120	1/10W
R41	NRSA02J-121	M.G.RESISTOR	120	1/10W
R42	NRSA02J-333	M.G.RESISTOR	33K	1/10W
R43	NRSA02J-121	M.G.RESISTOR	120	1/10W
R44	NRSA02J-333	M.G.RESISTOR	33K	1/10W
R45	NRSA02J-121	M.G.RESISTOR	120	1/10W
R46	NRSA02J-333	M.G.RESISTOR	33K	1/10W
R47	NRSA02J-121	M.G.RESISTOR	120	1/10W
R48	NRSA02J-333	M.G.RESISTOR	33K	1/10W
R51	NRSA02J-333	M.G.RESISTOR	33K	1/10W
R52	NRSA02J-333	M.G.RESISTOR	33K	1/10W
R53	NRSA02J-333	M.G.RESISTOR	33K	1/10W
R54	NRSA02J-333	M.G.RESISTOR	33K	1/10W
R55	NRSA02J-101	M.G.RESISTOR	100	1/10W
R56	NRSA02J-333	M.G.RESISTOR	33K	1/10W
R57	NRSA02J-121	M.G.RESISTOR	120	1/10W
R58	NRSA02J-102	M.G.RESISTOR	1.0K	1/10W
R59	NRSA02J-101	M.G.RESISTOR	100	1/10W
R60	NRSA02J-104	M.G.RESISTOR	100K	1/10W
R61	NRSA02J-104	M.G.RESISTOR	100K	1/10W
R62	NRSA02J-104	M.G.RESISTOR	100K	1/10W
R63	NRSA02J-104	M.G.RESISTOR	100K	1/10W
R64	NRSA02J-121	M.G.RESISTOR	120	1/10W
R65	NRSA02J-121	M.G.RESISTOR	120	1/10W
R66	NRSA02J-121	M.G.RESISTOR	120	1/10W
R67	NRSA02J-121	M.G.RESISTOR	120	1/10W
R68	NRSA02J-121	M.G.RESISTOR	120	1/10W
R69	NRSA02J-121	M.G.RESISTOR	120	1/10W
R70	NRSA02J-121	M.G.RESISTOR	120	1/10W
R71	NRSA02J-121	M.G.RESISTOR	120	1/10W
R72	NRSA02J-121	M.G.RESISTOR	120	1/10W
R73	NRSA02J-121	M.G.RESISTOR	120	1/10W
R74	NRSA02J-121	M.G.RESISTOR	120	1/10W
R75	NRSA02J-121	M.G.RESISTOR	120	1/10W
R76	NRSA02J-333	M.G.RESISTOR	33K	1/10W
R77	NRSA02J-333	M.G.RESISTOR	33K	1/10W
R78	NRSA02J-333	M.G.RESISTOR	33K	1/10W
R79	NRSA02J-333	M.G.RESISTOR	33K	1/10W
R80	NRSA02J-333	M.G.RESISTOR	33K	1/10W
R81	NRSA02J-271	M.G.RESISTOR	270	1/10W
R82	NRSA02J-271	M.G.RESISTOR	270	1/10W
R83	NRSA02J-271	M.G.RESISTOR	270	1/10W
R84	NRSA02J-271	M.G.RESISTOR	270	1/10W
R85	NRSA02J-271	M.G.RESISTOR	270	1/10W
R86	NRSA02J-271	M.G.RESISTOR	270	1/10W
R87	NRSA02J-271	M.G.RESISTOR	270	1/10W
R88	NRSA02J-271	M.G.RESISTOR	270	1/10W
R89	NRSA02J-271	M.G.RESISTOR	270	1/10W
R90	NRSA02J-271	M.G.RESISTOR	270	1/10W
R91	NRSA02J-271	M.G.RESISTOR	270	1/10W
R92	NRSA02J-271	M.G.RESISTOR	270	1/10W

OPERATION]

Symbol No.	Part No.	Part Name	Description
R93	NRSA02J-271	M.G.RESISTOR	270 1/10W
R94	NRSA02J-271	M.G.RESISTOR	270 1/10W
R95	NRSA02J-271	M.G.RESISTOR	270 1/10W
R96	NRSA02J-271	M.G.RESISTOR	270 1/10W
R97	NRSA02J-271	M.G.RESISTOR	270 1/10W
R98	NRSA02J-271	M.G.RESISTOR	270 1/10W
R99	NRSA02J-271	M.G.RESISTOR	270 1/10W
R100	NRSA02J-271	M.G.RESISTOR	270 1/10W
R101	NRSA02J-271	M.G.RESISTOR	270 1/10W
R102	NRSA02J-271	M.G.RESISTOR	270 1/10W
R103	NRSA02J-271	M.G.RESISTOR	270 1/10W
R104	NRSA02J-271	M.G.RESISTOR	270 1/10W
R105	NRSA02J-271	M.G.RESISTOR	270 1/10W
R106	NRSA02J-271	M.G.RESISTOR	270 1/10W
R107	NRSA02J-271	M.G.RESISTOR	270 1/10W
R108	NRSA02J-271	M.G.RESISTOR	270 1/10W
R109	NRSA02J-271	M.G.RESISTOR	270 1/10W
R110	NRSA02J-271	M.G.RESISTOR	270 1/10W
R111	NRSA02J-271	M.G.RESISTOR	270 1/10W
R112	NRSA02J-271	M.G.RESISTOR	270 1/10W
R113	NRSA02J-271	M.G.RESISTOR	270 1/10W
R114	NRSA02J-271	M.G.RESISTOR	270 1/10W
R115	NRSA02J-271	M.G.RESISTOR	270 1/10W
R116	NRSA02J-271	M.G.RESISTOR	270 1/10W
R117	NRSA02J-271	M.G.RESISTOR	270 1/10W
R118	NRSA02J-271	M.G.RESISTOR	270 1/10W
R119	NRSA02J-271	M.G.RESISTOR	270 1/10W
R121	NRSA02J-271	M.G.RESISTOR	270 1/10W
R123	NRSA02J-471	M.G.RESISTOR	470 1/10W
R124	NRSA02J-471	M.G.RESISTOR	470 1/10W
R125	NRSA02J-331	M.G.RESISTOR	330 1/10W
R126	NRSA02J-331	M.G.RESISTOR	330 1/10W
R127	NRSA02J-471	M.G.RESISTOR	470 1/10W
R128	NRSA02J-471	M.G.RESISTOR	470 1/10W
R129	NRSA02J-471	M.G.RESISTOR	470 1/10W
R130	NRSA02J-471	M.G.RESISTOR	470 1/10W
R131	NRSA02J-471	M.G.RESISTOR	470 1/10W
R132	NRSA02J-471	M.G.RESISTOR	470 1/10W
R133	NRSA02J-271	M.G.RESISTOR	270 1/10W
R134	NRSA02J-271	M.G.RESISTOR	270 1/10W
R135	NRSA02J-471	M.G.RESISTOR	470 1/10W
R136	NRSA02J-471	M.G.RESISTOR	470 1/10W
R137	NRSA02J-271	M.G.RESISTOR	270 1/10W
R138	NRSA02J-271	M.G.RESISTOR	270 1/10W
R139	NRSA02J-471	M.G.RESISTOR	470 1/10W
R140	NRSA02J-471	M.G.RESISTOR	470 1/10W
R143	NRSA02J-331	M.G.RESISTOR	330 1/10W
R144	NRSA02J-181	M.G.RESISTOR	180 1/10W
R145	NRSA02J-331	M.G.RESISTOR	330 1/10W
R146	NRSA02J-471	M.G.RESISTOR	470 1/10W
R147	NRSA02J-471	M.G.RESISTOR	470 1/10W
R150	NRSA02J-181	M.G.RESISTOR	180 1/10W
R151	NRSA02J-181	M.G.RESISTOR	180 1/10W
R152	NRSA02J-331	M.G.RESISTOR	330 1/10W
R153	NRSA02J-181	M.G.RESISTOR	180 1/10W
R154	NRSA02J-181	M.G.RESISTOR	180 1/10W
R155	NRSA02J-181	M.G.RESISTOR	180 1/10W
R156	NRSA02J-181	M.G.RESISTOR	180 1/10W
R157	NRSA02J-181	M.G.RESISTOR	180 1/10W

Symbol No.	Part No.	Part Name	Description
R158	NRSA02J-181	M.G.RESISTOR	180 1/10W
VR1	PGZ02277	VR	TRAKING
VR2	PGZ02276	VR	DA1 REC LEVEL
VR3	PGZ02276	VR	DA2 REC LEVEL
VR4	PGZ01965	TRIM.RESISTOR	PHONE
VR5	QVPB701-103	TRIM.RESISTOR	10K SYSTEM PHA.
VR6	QVPB701-103	TRIM.RESISTOR	10K SC PHASE
VR7	QVPB701-103	TRIM.RESISTOR	10K VIDEO PHA.
C1	NCB21HK-223	CER.CAPACITOR	0.022 50V
C2	NCB21HK-223	CER.CAPACITOR	0.022 50V
C3	NCB21HK-223	CER.CAPACITOR	0.022 50V
C4	NCB21HK-223	CER.CAPACITOR	0.022 50V
C5	NCB21HK-223	CER.CAPACITOR	0.022 50V
C6	NCB21HK-223	CER.CAPACITOR	0.022 50V
C7	NCB21HK-223	CER.CAPACITOR	0.022 50V
C8	NCB21HK-223	CER.CAPACITOR	0.022 50V
C9	NCB21HK-223	CER.CAPACITOR	0.022 50V
C10	NCB21HK-223	CER.CAPACITOR	0.022 50V
C11	NCB21HK-223	CER.CAPACITOR	0.022 50V
C12	NCB21HK-223	CER.CAPACITOR	0.022 50V
C13	NCB21HK-223	CER.CAPACITOR	0.022 50V
C14	NCT03CH-220	CER.CAPACITOR	22P 50V
C15	NCT03CH-220	CER.CAPACITOR	22P 50V
C16	NEE51AM-476	TAN.CAPACITOR	47 10V
C17	NCB21HK-223	CER.CAPACITOR	0.022 50V
C20	NEF11EM-475	TAN.CAPACITOR	4.7 25V
C21	NEF11EM-475	TAN.CAPACITOR	4.7 25V
C22	NCB21HK-223	CER.CAPACITOR	0.022 50V
C23	QER41EM-336	E.CAPACITOR	33 25V
C24	NCB21HK-223	CER.CAPACITOR	0.022 50V
C25	QER41EM-336	E.CAPACITOR	33 25V
X1	PGZ02215	CRYSTAL	4.9152MHz
S1	PESW0525-02Z	TACT SWITCH	EJECT
S2	PESW0525-02Z	TACT SWITCH	REC
S3	PESW0525-02Z	TACT SWITCH	PLAY
S4	PESW0525-02Z	TACT SWITCH	PAUSE
S5	PESW0525-02Z	TACT SWITCH	STNBY
S6	PESW0525-02Z	TACT SWITCH	REW
S7	PESW0525-02Z	TACT SWITCH	STOP
S8	PESW0525-02Z	TACT SWITCH	FF
S9	PESW0525-02Z	TACT SWITCH	FINE
S10	PESW0525-02Z	TACT SWITCH	TRACK
S11	PESW0525-02Z	TACT SWITCH	MENU
S12	PESW0525-02Z	TACT SWITCH	SET
S13	PESW0525-02Z	TACT SWITCH	SELECT
S14	PESW0525-02Z	TACT SWITCH	C.RESET
S15	PESW0525-02Z	TACT SWITCH	SEARCH
S16	PGZ00470-02	SLIDE SWITCH	COUNTER
S17	QSS4E12-S03	SLIDE SWITCH	INT/EXT
S18	QSS4E12-S03	SLIDE SWITCH	REC/FREE
S19	QSS4E12-S03	SLIDE SWITCH	PRE/REG
S20	PGZ00470-02	SLIDE SWITCH	V IN
S21	PGZ00470-02	SLIDE SWITCH	A MONI

6.17 HP BOARD ASSEMBLY LIST 33

SLK1022-02-A0A 33□□□□□□□

Symbol No.	Part No.	Part Name	Description
S22	PGZ00469-02	SLIDE SWITCH	A IN
S23	PGZ00469-02	SLIDE SWITCH	REMOTE
CN1	PGZ01942-6	CONNECTOR	6PIN
CN2	PGZ01942-15	CONNECTOR	15PIN
CN3	PGZ01942-15	CONNECTOR	15PIN
CN4	PU59555-9	CONNECTOR	9PIN
CN5	PU59555-4	CONNECTOR	4PIN
K1	PGZ00627	FERRATE BEADS	
K2	PGZ00627	FERRATE BEADS	
SP1	PRD44204	SPACER	
HD1	PQ43191	LED HOLDER	
SP2	PRD43073	SPACER	
BK1	PRD31065	BRACKET	PHONE VR

Symbol No.	Part No.	Part Name	Description	
Q501	DTC323TK	TRANSISTOR	ROHM	
Q502	DTC323TK	TRANSISTOR	ROHM	
R501	NRSA02J-330	M.G.RESISTOR	33	1/10W
R502	NRSA02J-103	M.G.RESISTOR	10K	1/10W
R503	NRSA02J-330	M.G.RESISTOR	33	1/10W
R504	NRSA02J-103	M.G.RESISTOR	10K	1/10W
C501	QER41CM-476	E.CAPACITOR	47	16V
C502	QER41CM-476	E.CAPACITOR	47	16V
CN501	PU59555-4	CONNECTOR	4PIN	
JK501	PGZ00725	JACK	HEAD PHONE	

6.18 REEL MDA BOARD ASSEMBLY LIST [3][6]

SLK2017-A1A [3][6]□□□□□□□

Symbol No.	Part No.	Part Name	Description	
IC1	UPC393C	I.C.(M)	NEC	
IC2	UPC393C	I.C.(M)	NEC	
IC3	AN3834K	I.C.(M)	MATSUSHITA	
IC4	AN3834K	I.C.(M)	MATSUSHITA	
Q1	2SB1142	TRANSISTOR	SANYO	
Q2	2SC1740S	TRANSISTOR	ROHM	
Q3	DTA124ES	TRANSISTOR	ROHM	
Q4	2SB1142	TRANSISTOR	SANYO	
Q5	2SC1740S	TRANSISTOR	ROHM	
Q6	DTA124ES	TRANSISTOR	ROHM	
D1	RK14LF	DIODE	SANKEN	
D2	1SS133	DIODE	ROHM	
D3	1SS133	DIODE	ROHM	
D4	RK14LF	DIODE	SANKEN	
D5	1SS133	DIODE	ROHM	
R1	QRD161J-102	C.RESISTOR	1.0K	1/6W
R2	QRG019J-561	O.M.F.RESISTOR	560	1W
R3	QRD161J-102	C.RESISTOR	1.0K	1/6W
R4	QRD161J-104	C.RESISTOR	100K	1/6W
R5	QRD161J-103	C.RESISTOR	10K	1/6W
R6	QRD161J-332	C.RESISTOR	3.3K	1/6W
R7	QRD161J-222	C.RESISTOR	2.2K	1/6W
R8	QRD161J-104	C.RESISTOR	100K	1/6W
R9	QRD161J-333	C.RESISTOR	33K	1/6W
R10	QRD161J-182	C.RESISTOR	1.8K	1/6W
R11	QRD161J-474	C.RESISTOR	470K	1/6W
R12	QRD161J-222	C.RESISTOR	2.2K	1/6W
R13	QRD161J-102	C.RESISTOR	1.0K	1/6W
R14	QRG019J-561	O.M.F.RESISTOR	560	1W
R15	QRD161J-102	C.RESISTOR	1.0K	1/6W
R16	QRD161J-104	C.RESISTOR	100K	1/6W
R17	QRD161J-103	C.RESISTOR	10K	1/6W
R18	QRX029J-R56	M.F.RESISTOR	0.56	2W
R19	QRD161J-472	C.RESISTOR	4.7K	1/6W
R20	QRD161J-223	C.RESISTOR	22K	1/6W
R21	QRD161J-221	C.RESISTOR	220	1/6W
R22	QRD161J-221	C.RESISTOR	220	1/6W
R23	QRX029J-R56	M.F.RESISTOR	0.56	2W
R24	QRD161J-472	C.RESISTOR	4.7K	1/6W
R25	QRD161J-223	C.RESISTOR	22K	1/6W
R26	QRD161J-221	C.RESISTOR	220	1/6W
R27	QRD161J-221	C.RESISTOR	220	1/6W
C1	QETA1EM-107	E.CAPACITOR	100	25V
C2	QCF11HP-223	CER.CAPACITOR	0.022	50V
C3	QEZ0139-107	E.CAPACITOR	100	
C4	QEZ0139-107	E.CAPACITOR	100	
C5	QETA1CM-106	E.CAPACITOR	10	16V
C6	QETA1CM-476	E.CAPACITOR	47	16V
C7	QCF11HP-223	CER.CAPACITOR	0.022	50V
C8	QFN41HJ-102	MY.CAPACITOR	1000P	50V
C9	QEZ0139-107	E.CAPACITOR	100	
C10	QEZ0139-107	E.CAPACITOR	100	
C11	QETA1CM-106	E.CAPACITOR	10	16V
C12	QETA1VM-227	E.CAPACITOR	220	35V

Symbol No.	Part No.	Part Name	Description	
C13	QCF11HP-223	CER.CAPACITOR	0.022	50V
C14	QETA1EM-476	E.CAPACITOR	47	25V
C15	QFV21HJ-104	S.M.F.CAPACITOR	0.10	50V
C16	QCF11HP-223	CER.CAPACITOR	0.022	50V
C17	QFV21HJ-104	S.M.F.CAPACITOR	0.10	50V
C18	QFV21HJ-104	S.M.F.CAPACITOR	0.10	50V
C19	QETA1HM-475	E.CAPACITOR	4.7	50V
C20	QETA1HM-475	E.CAPACITOR	4.7	50V
C21	QETA1HM-475	E.CAPACITOR	4.7	50V
C22	QFV21HJ-154	S.M.F.CAPACITOR	0.15	50V
C23	QFV21HJ-154	S.M.F.CAPACITOR	0.15	50V
C24	QFV21HJ-154	S.M.F.CAPACITOR	0.15	50V
C25	QCF11HP-472	CER.CAPACITOR	4700P	50V
C26	QCF11HP-472	CER.CAPACITOR	4700P	50V
C27	QCF11HP-472	CER.CAPACITOR	4700P	50V
C28	QCF11HP-223	CER.CAPACITOR	0.022	50V
C29	QETA1VM-227	E.CAPACITOR	220	35V
C30	QCF11HP-223	CER.CAPACITOR	0.022	50V
C31	QETA1EM-476	E.CAPACITOR	47	25V
C32	QFV21HJ-104	S.M.F.CAPACITOR	0.10	50V
C33	QCF11HP-223	CER.CAPACITOR	0.022	50V
C34	QFV21HJ-104	S.M.F.CAPACITOR	0.10	50V
C35	QFV21HJ-104	S.M.F.CAPACITOR	0.10	50V
C36	QETA1HM-475	E.CAPACITOR	4.7	50V
C37	QETA1HM-475	E.CAPACITOR	4.7	50V
C38	QETA1HM-475	E.CAPACITOR	4.7	50V
C39	QFV21HJ-154	S.M.F.CAPACITOR	0.15	50V
C40	QFV21HJ-154	S.M.F.CAPACITOR	0.15	50V
C41	QFV21HJ-154	S.M.F.CAPACITOR	0.15	50V
C42	QCF11HP-472	CER.CAPACITOR	4700P	50V
C43	QCF11HP-472	CER.CAPACITOR	4700P	50V
C44	QCF11HP-472	CER.CAPACITOR	4700P	50V
C45	QCF11HP-223	CER.CAPACITOR	0.022	50V
L1	PU50277	PEAKING COIL		
L2	PU50755	CHOKE COIL		
L3	PU48530-271	PEAKING COIL	270μ	
L4	PU50277	PEAKING COIL		
L5	PU50755	CHOKE COIL		
CN1	PU59555-6	CONNECTOR	6PIN	
CN2	PU59555-8	CONNECTOR	8PIN	
CN3	PU59555-10	CONNECTOR	10PIN	
CN4	PU59555-10	CONNECTOR	10PIN	
CN5	PU59555-7	CONNECTOR	7PIN	
CN6	PU59555-10	CONNECTOR	10PIN	
CN7	PU59555-7	CONNECTOR	7PIN	
CP1	ICP-N25	CIRCUIT PROTECTOR		
CP2	ICP-N25	CIRCUIT PROTECTOR		
K1	PU60281-2	FERRITE BEADS		
K2	PU60281-2	FERRITE BEADS		
K3	PU60281-2	FERRITE BEADS		
K4	PU60281-2	FERRITE BEADS		
K5	PU60281-2	FERRITE BEADS		
HS1	PQ45789	HEAT SINK		
SC1	SBSB3008Z	SCREW	M3×8	

6.19 REAR 1 BOARD ASSEMBLY LIST [4][0]

SLK1020-01-A3A [4][0]□□□□□□□

Symbol No.	Part No.	Part Name	Description	
IC1	M5278L12	I.C.(M)	MITSUBISHI	
D1	RD16ES	ZENER DIODE	NEC	
D2	RD16ES	ZENER DIODE	NEC	
D3	RD16ES	ZENER DIODE	NEC	
D4	RD16ES	ZENER DIODE	NEC	
D5	RD16ES	ZENER DIODE	NEC	
D6	RD16ES	ZENER DIODE	NEC	
D7	RD16ES	ZENER DIODE	NEC	
D8	RD10ES	ZENER DIODE	NEC	
D9	RD10ES	ZENER DIODE	NEC	
D10	RD10ES	ZENER DIODE	NEC	
D11	RD10ES	ZENER DIODE	NEC	
D12	RD10ES	ZENER DIODE	NEC	
D13	RD10ES	ZENER DIODE	NEC	
D14	RD10ES	ZENER DIODE	NEC	
D15	RD10ES	ZENER DIODE	NEC	
D16	RD10ES	ZENER DIODE	NEC	
D17	RD10ES	ZENER DIODE	NEC	
D18	RD10ES	ZENER DIODE	NEC	
D19	RD10ES	ZENER DIODE	NEC	
D20	RD10ES	ZENER DIODE	NEC	
D21	RD10ES	ZENER DIODE	NEC	
D22	RD10ES	ZENER DIODE	NEC	
D23	RD10ES	ZENER DIODE	NEC	
D24	RD10ES	ZENER DIODE	NEC	
D25	RD10ES	ZENER DIODE	NEC	
D26	RD10ES	ZENER DIODE	NEC	
D27	RD10ES	ZENER DIODE	NEC	
D28	RD10ES	ZENER DIODE	NEC	
D29	RD10ES	ZENER DIODE	NEC	
D30	RD10ES	ZENER DIODE	NEC	
D31	RD10ES	ZENER DIODE	NEC	
D32	RD10ES	ZENER DIODE	NEC	
D33	RD10ES	ZENER DIODE	NEC	
D34	RD10ES	ZENER DIODE	NEC	
D35	RD10ES	ZENER DIODE	NEC	
D36	RD10ES	ZENER DIODE	NEC	
D37	RD10ES	ZENER DIODE	NEC	
D38	RD10ES	ZENER DIODE	NEC	
D39	RD10ES	ZENER DIODE	NEC	
D40	RD10ES	ZENER DIODE	NEC	
D41	RD10ES	ZENER DIODE	NEC	
D42	RD16ES	ZENER DIODE	NEC	
D43	RD16ES	ZENER DIODE	NEC	
R1	QRD161J-750	C.RESISTOR	75	1/6W
C1	QCF11HP-102	CER.CAPACITOR	1000P	50V
C2	QCF11HP-102	CER.CAPACITOR	1000P	50V
C15	QER41CM-107	E.CAPACITOR	100	16V
C16	QCF11HP-103	CER.CAPACITOR	0.010	50V
C17	QCF11HP-103	CER.CAPACITOR	0.010	50V
L1	PU48530-8R2	PEAKING COIL	8.2μ	

Symbol No.	Part No.	Part Name	Description
S1	PGZ00469-02	SLIDE SWITCH	
S2	PGZ00469-02	SLIDE SWITCH	
S3	PGZ00469-02	SLIDE SWITCH	
J1	PGZ00915	9PIN CONNECTOR	
J2	PGZ01461	9P CONNECTOR(M)	
J3	PGZ00755	15PIN CONNECTOR	
J4	PGZ01948	4P BNC CONN.	
J5	PGZ02203	S 2P BNC CONN.	
J6	PGZ01948-02	3P BNC CONN.	
J7	PGZ02203	S 2P BNC CONN.	
J8	PGZ02074	PIN 3P BNC CONN	
CN1	PGZ01942-10	CONNECTOR	10PIN
CN2	PGZ01942-15	CONNECTOR	15PIN
CN3	PGZ01942-15	CONNECTOR	15PIN
CN4	PGZ01942-15	CONNECTOR	15PIN
CN5	PGZ01942-10	CONNECTOR	10PIN
CN6	PGZ01942-15	CONNECTOR	15PIN
CN7	PU59555-106	CONNECTOR	6PIN
CN8	PU59555-106	CONNECTOR	6PIN
K1	PU60281-2	FERRITE BEADS	
K2	PU60281-2	FERRITE BEADS	
K3	PU60281-2	FERRITE BEADS	
K4	PU60281-2	FERRITE BEADS	
K5	PU60281-2	FERRITE BEADS	
K6	PU60281-2	FERRITE BEADS	
K23	PU60281-2	FERRITE BEADS	
VA1	ERZ-V05D220	VARISTOR	
VA2	ERZ-V05D220	VARISTOR	
VA3	ERZ-V05D220	VARISTOR	
VA4	ERZ-V05D220	VARISTOR	
VA5	ERZ-V05D220	VARISTOR	
VA6	ERZ-V05D220	VARISTOR	
VA7	ERZ-V05D220	VARISTOR	
VA8	ERZ-V05D220	VARISTOR	
VA9	ERZ-V05D220	VARISTOR	
VA10	ERZ-V05D220	VARISTOR	
VA11	ERZ-V05D220	VARISTOR	
VA16	ERZ-V05D220	VARISTOR	
VA17	ERZ-V05D220	VARISTOR	
BK1	PRD31063	BRACKET	

6.20 REAR 2 BOARD ASSEMBLY LIST [4][1]

SLK1020-02-C1A [4][1]□□□□□□□

Symbol No.	Part No.	Part Name	Description
D44	RD27ES	ZENER DIODE	NEC
D45	RD27ES	ZENER DIODE	NEC
D46	RD27ES	ZENER DIODE	NEC
D47	RD27ES	ZENER DIODE	NEC
D48	RD27ES	ZENER DIODE	NEC
D49	RD27ES	ZENER DIODE	NEC
D50	RD27ES	ZENER DIODE	NEC
D51	RD27ES	ZENER DIODE	NEC
D52	RD27ES	ZENER DIODE	NEC
D53	RD27ES	ZENER DIODE	NEC
D54	RD27ES	ZENER DIODE	NEC
D55	RD27ES	ZENER DIODE	NEC
D56	RD27ES	ZENER DIODE	NEC
D57	RD27ES	ZENER DIODE	NEC
D58	RD27ES	ZENER DIODE	NEC
D59	RD27ES	ZENER DIODE	NEC
R3	QRD161J-0R0	C.RESISTOR	0 1/6W
R5	QRD161J-0R0	C.RESISTOR	0 1/6W
R7	QRD161J-0R0	C.RESISTOR	0 1/6W
R9	QRD161J-0R0	C.RESISTOR	0 1/6W
R11	QRD161J-0R0	C.RESISTOR	0 1/6W
R13	QRD161J-0R0	C.RESISTOR	0 1/6W
R15	QRD161J-0R0	C.RESISTOR	0 1/6W
R17	QRD161J-0R0	C.RESISTOR	0 1/6W
C3	QCF11HP-102	CER.CAPACITOR	1000P 50V
C4	QCF11HP-102	CER.CAPACITOR	1000P 50V
C5	QCF11HP-102	CER.CAPACITOR	1000P 50V
C6	QCF11HP-102	CER.CAPACITOR	1000P 50V
C7	QCF11HP-102	CER.CAPACITOR	1000P 50V
C8	QCF11HP-102	CER.CAPACITOR	1000P 50V
C9	QCF11HP-102	CER.CAPACITOR	1000P 50V
C10	QCF11HP-102	CER.CAPACITOR	1000P 50V
C11	QCF11HP-102	CER.CAPACITOR	1000P 50V
C12	QCF11HP-102	CER.CAPACITOR	1000P 50V
C13	QCF11HP-102	CER.CAPACITOR	1000P 50V
C14	QCF11HP-102	CER.CAPACITOR	1000P 50V
L2	PU48530-8R2	PEAKING COIL	8.2μ
L3	PU48530-8R2	PEAKING COIL	8.2μ
L4	PU48530-8R2	PEAKING COIL	8.2μ
L5	PU48530-8R2	PEAKING COIL	8.2μ
L6	PU48530-8R2	PEAKING COIL	8.2μ
L7	PU48530-8R2	PEAKING COIL	8.2μ
L8	PU48530-8R2	PEAKING COIL	8.2μ
L9	PU48530-8R2	PEAKING COIL	8.2μ
J13	XLM-3-31PCS	XLR CONNECTOR	IN
J14	XLM-3-31PCS	XLR CONNECTOR	IN
J15	XLM-3-32PCS	XLR CONNECTOR	OUT
J16	XLM-3-32PCS	XLR CONNECTOR	OUT
CN9	PU59555-106	CONNECTOR	6PIN
CN10	PU59555-106	CONNECTOR	6PIN
VA12	ERZ-V05D220	VARISTOR	

Symbol No.	Part No.	Part Name	Description
VA13	ERZ-V05D220	VARISTOR	
VA14	ERZ-V05D220	VARISTOR	
VA15	ERZ-V05D220	VARISTOR	

6.21 ESENS/FLYE BOARD ASSEMBLY LIST [5][0]

SLK2018-01-A1A [5][0][ ][ ][ ][ ][ ][ ]

Symbol No.	Part No.	Part Name	Description	
IC1	UPC78L12T	I.C.(M)	NEC	
Q1	2SC2412K	TRANSISTOR	ROHM	
Q2	2SA1037K	TRANSISTOR	ROHM	
Q3	DTC124EK	TRANSISTOR	ROHM	
Q11	2SK621	F.E.T.	MATSUSHITA	
Q12	2SA1037K	TRANSISTOR	ROHM	
Q13	2SC3735(45)	TRANSISTOR	NEC	
Q14	2SC3735(45)	TRANSISTOR	NEC	
Q15	2SC3735(45)	TRANSISTOR	NEC	
Q16	2SC3735(45)	TRANSISTOR	NEC	
Q17	2SK621	F.E.T.	MATSUSHITA	
Q18	2SA1037K	TRANSISTOR	ROHM	
D1	HZ3BLL	ZENER DIODE	HITACHI	
R1	NRSA02J-223	M.G.RESISTOR	22K	1/10W
R2	NRSA02J-6R8	M.G.RESISTOR	6.8	1/10W
R3	NRSA02J-473	M.G.RESISTOR	47K	1/10W
R4	NRSA02J-472	M.G.RESISTOR	4.7K	1/10W
R11	NRSA02J-223	M.G.RESISTOR	22K	1/10W
R12	NRSA02J-332	M.G.RESISTOR	3.3K	1/10W
R13	NRSA02J-560	M.G.RESISTOR	56	1/10W
R14	NRSA02J-272	M.G.RESISTOR	2.7K	1/10W
R15	NRSA02J-471	M.G.RESISTOR	470	1/10W
R16	NRSA02J-560	M.G.RESISTOR	56	1/10W
R17	NRSA02J-560	M.G.RESISTOR	56	1/10W
R18	NRSA02J-390	M.G.RESISTOR	39	1/10W
R19	NRSA02J-272	M.G.RESISTOR	2.7K	1/10W
R20	NRSA02J-471	M.G.RESISTOR	470	1/10W
R21	NRSA02J-272	M.G.RESISTOR	2.7K	1/10W
R22	NRSA02J-471	M.G.RESISTOR	470	1/10W
R23	NRSA02J-560	M.G.RESISTOR	56	1/10W
R24	NRSA02J-560	M.G.RESISTOR	56	1/10W
R25	NRSA02J-390	M.G.RESISTOR	39	1/10W
R26	NRSA02J-272	M.G.RESISTOR	2.7K	1/10W
R27	NRSA02J-471	M.G.RESISTOR	470	1/10W
R28	NRSA02J-560	M.G.RESISTOR	56	1/10W
R29	NRSA02J-223	M.G.RESISTOR	22K	1/10W
R30	NRSA02J-332	M.G.RESISTOR	3.3K	1/10W
C1	NCB21HK-332	CER.CAPACITOR	3300P	50V
C2	NCB21HK-102	CER.CAPACITOR	1000P	50V
C3	QFP42AJ-333	P.P.CAPACITOR	0.033	100V
C4	NEF11VM-335	TAN.CAPACITOR	3.3	35V
C5	NEF11VM-335	TAN.CAPACITOR	3.3	35V
C6	NCB21HK-223	CER.CAPACITOR	0.022	50V
C7	NCB21HK-223	CER.CAPACITOR	0.022	50V
C8	NEF11VM-335	TAN.CAPACITOR	3.3	35V
C11	NCT03CH-221	CER.CAPACITOR	220P	50V
C12	NCT03CH-121	CER.CAPACITOR	120P	50V
C13	NCB21HK-103	CER.CAPACITOR	0.010	50V
C15	NCT03CH-3R0	CER.CAPACITOR	3.0P	50V
C16	NCT03CH-5R0	CER.CAPACITOR	5.0P	50V
C17	NCT03CH-5R0	CER.CAPACITOR	5.0P	50V
C19	NCT03CH-3R0	CER.CAPACITOR	3.0P	50V
C20	NCT03CH-5R0	CER.CAPACITOR	5.0P	50V

Symbol No.	Part No.	Part Name	Description	
C21	NCT03CH-5R0	CER.CAPACITOR	5.0P	50V
C22	NCB21HK-103	CER.CAPACITOR	0.010	50V
C23	NCT03CH-121	CER.CAPACITOR	120P	50V
C24	NCT03CH-221	CER.CAPACITOR	220P	50V
L11	PU58201-1R0	COIL	1μ	
L12	PU58201-1R0	COIL	1μ	
L13	PU58201-1R0	COIL	1μ	
L14	PU58201-1R0	COIL	1μ	
T1	PU60321	TRANS		
CN1	PU59555-2	CONNECTOR	2PIN	
CN2	PU59555-108	CONNECTOR	8PIN	
CN4	PU59555-106	CONNECTOR	6PIN	
ES1	PU61321-1-2	END SENSOR		

6.22 MOTOR TERMINAL BOARD ASSEMBLY LIST [53]
SLK2018-03-A1A [53]□□□□□□□

Symbol No.	Part No.	Part Name	Description
C5	NCB21HK-223	CER.CAPACITOR	0.022 50V
CN5	PU59555-2	CONNECTOR	2PIN

6.23 CASSETTE HOUSING BOARD ASSEMBLY LIST [54]
PRK20255A-01 [54]□□□□□□□

Symbol No.	Part No.	Part Name	Description
Q1	PN2681VI	PHOTO TRANSISTOR	MATSUSHITA
SW1	YU40177-2	PUSH SWITCH	CASSETTE SWITCH
SW2	YU40177-2	PUSH SWITCH	INSERT SWITCH
CN1	PU59555-106	CONNECTOR	6PIN

6.24 MECHA TRM BOARD ASSEMBLY LIST [55]
SLK2018-05-A1A [55]□□□□□□□

Symbol No.	Part No.	Part Name	Description
CN6	PU59555-8	CONNECTOR	8PIN
CN7	PU59555-2	CONNECTOR	2PIN
CN8	PU59555-2	CONNECTOR	2PIN
CN9	PU59555-2	CONNECTOR	2PIN
CN10	PU59555-3	CONNECTOR	3PIN

6.25 A/C HEAD BOARD ASSEMBLY LIST [56]
SLK2018-02-A1A [56]□□□□□□□

Symbol No.	Part No.	Part Name	Description
CN11	PU59555-111	CONNECTOR	11PIN

6.26 W SENSOR BOARD ASSEMBLY LIST [57]
SLK2018-04-A1A [57]□□□□□□□

Symbol No.	Part No.	Part Name	Description
PS1	PU61426	W.SENSOR	
CN12	PU59555-104	CONNECTOR	4PIN

6.27 DIG I/O BOARD ASSEMBLY LIST [6][0]

SLK1032-A2A [6][0]□□□□□□

Symbol No.	Part No.	Part Name	Description
IC1	GS9005A	I.C.(M)	GENNUM
IC2	GS9000	I.C.(M)	GENNUM
IC3	GS9010A	I.C.(M)	GENNUM
IC4	UPC2384GA	I.C.(M)	NEC
IC5	JCL0032	I.C.(M)	JVC
IC6	TC7S08F	I.C.(M)	TOSHIBA
IC7	TC7WH74FU	I.C.(M)	TOSHIBA
IC8	CXD1171M	I.C.(M)	SONY
IC9	UPC393G2	I.C.(M)	NEC
IC10	TD74BC541F	I.C.(M)	TOSHIBA
IC11	DS90C031TM	I.C.(M)	NATIONAL SEMICO
IC12	DS90C031TM	I.C.(M)	NATIONAL SEMICO
IC13	DS90C031TM	I.C.(M)	NATIONAL SEMICO
IC14	DS90C031TM	I.C.(M)	NATIONAL SEMICO
IC15	DS90C031TM	I.C.(M)	NATIONAL SEMICO
IC16	TC7S32F	I.C.(M)	TOSHIBA
IC17	TC74HC123AF	I.C.(M)	TOSHIBA
IC18	DS90C032TM	I.C.(M)	NATIONAL SEMICO
IC19	DS90C032TM	I.C.(M)	NATIONAL SEMICO
IC20	DS90C032TM	I.C.(M)	NATIONAL SEMICO
IC21	JCL0031	I.C.(M)	JVC
IC22	GS9002	I.C.(M)	GENNUM
IC23	GS9007	I.C.(M)	GENNUM
IC24	TC74HC165AF	I.C.(M)	TOSHIBA
IC25	TD74BC541F	I.C.(M)	TOSHIBA
IC26	P16V8H-15S-001	I.C.(M)	AMD
IC27	TC7S04F	I.C.(M)	TOSHIBA
IC28	TC74VHCT04F	I.C.(M)	TOSHIBA
IC29	TC74HC541AF	I.C.(M)	TOSHIBA
IC201	YM3436D	I.C.(M)	YAMAHA
IC202	MC34050M	I.C.(M)	MOTOROLA
IC203	TC74HC161AF	I.C.(M)	TOSHIBA
IC204	YM3437C-F	I.C.(M)	YAMAHA
IC205	TC74HC4053AF	I.C.(M)	TOSHIBA
IC206	TC74HC00AF	I.C.(M)	TOSHIBA
IC207	TC74HC04AF	I.C.(M)	TOSHIBA
IC208	TC74HC04AF	I.C.(M)	TOSHIBA
IC211	TC74HC04AF	I.C.(M)	TOSHIBA
IC212	LM6181	I.C.(M)	NATIONAL SEMICO
IC213	UPC78L12T	I.C.(M)	NEC
Q1	2SA1036K(R)	TRANSISTOR	ROHM
D1	DA204K	DIODE	ROHM
D2	DA204K	DIODE	ROHM
D201	DA204K	DIODE	ROHM
D202	DA204K	DIODE	ROHM
R1	NRSA63J-750	M.G.RESISTOR	75 1/16W
R2	NRSA63J-911	M.G.RESISTOR	910 1/16W
R3	NRSA63J-332	M.G.RESISTOR	3.3K 1/16W
R4	NRSA63J-332	M.G.RESISTOR	3.3K 1/16W
R5	NRSA63J-121	M.G.RESISTOR	120 1/16W
R6	NRSA63J-391	M.G.RESISTOR	390 1/16W
R7	NRSA63J-391	M.G.RESISTOR	390 1/16W
R8	NRSA63J-391	M.G.RESISTOR	390 1/16W
R9	NRSA63J-391	M.G.RESISTOR	390 1/16W
R10	NRSA63J-472	M.G.RESISTOR	4.7K 1/16W

Symbol No.	Part No.	Part Name	Description
R11	NRSA63J-104	M.G.RESISTOR	100K 1/16W
R12	NRSA63J-273	M.G.RESISTOR	27K 1/16W
R13	NRSA63J-273	M.G.RESISTOR	27K 1/16W
R14	NRSA63J-332	M.G.RESISTOR	3.3K 1/16W
R15	NRSA63J-684	M.G.RESISTOR	680K 1/16W
R16	NRSA63J-101	M.G.RESISTOR	100 1/16W
R17	NRSA63J-103	M.G.RESISTOR	10K 1/16W
R18	NRSA63J-103	M.G.RESISTOR	10K 1/16W
R19	NRSA63J-103	M.G.RESISTOR	10K 1/16W
R20	NRSA63J-103	M.G.RESISTOR	10K 1/16W
R21	NRSA63J-101	M.G.RESISTOR	100 1/16W
R22	NRSA63J-101	M.G.RESISTOR	100 1/16W
R23	NRSA63J-333	M.G.RESISTOR	33K 1/16W
R24	NRSA63F-910	M.G.RESISTOR	91 1/16W
R25	NRSA63J-103	M.G.RESISTOR	10K 1/16W
R26	NRSA63J-103	M.G.RESISTOR	10K 1/16W
R27	NRSA63J-221	M.G.RESISTOR	220 1/16W
R28	NRSA63J-101	M.G.RESISTOR	100 1/16W
R29	NRSA63J-101	M.G.RESISTOR	100 1/16W
R30	NRSA63J-101	M.G.RESISTOR	100 1/16W
R31	NRSA63J-473	M.G.RESISTOR	47K 1/16W
R32	NRSA63J-473	M.G.RESISTOR	47K 1/16W
R33	NRSA63J-103	M.G.RESISTOR	10K 1/16W
R35	NRSA63J-0R0	M.G.RESISTOR	0 1/16W
R36	NRSA63J-0R0	M.G.RESISTOR	0 1/16W
R37	NRSA63J-332	M.G.RESISTOR	3.3K 1/16W
R38	NRSA63J-333	M.G.RESISTOR	33K 1/16W
R39	NRSA63J-223	M.G.RESISTOR	22K 1/16W
R40	NRSA63J-221	M.G.RESISTOR	220 1/16W
R41	NRSA63J-102	M.G.RESISTOR	1.0K 1/16W
R42	NRSA63J-470	M.G.RESISTOR	47 1/16W
R43	NRSA63J-332	M.G.RESISTOR	3.3K 1/16W
R44	NRSA63J-682	M.G.RESISTOR	6.8K 1/16W
R45	NRSA63J-332	M.G.RESISTOR	3.3K 1/16W
R46	NRSA63J-332	M.G.RESISTOR	3.3K 1/16W
R47	NRSA63J-101	M.G.RESISTOR	100 1/16W
R48	NRSA63J-101	M.G.RESISTOR	100 1/16W
R49	NRSA63J-101	M.G.RESISTOR	100 1/16W
R50	NRSA63J-101	M.G.RESISTOR	100 1/16W
R51	NRSA63J-101	M.G.RESISTOR	100 1/16W
R52	NRSA63J-101	M.G.RESISTOR	100 1/16W
R53	NRSA63J-101	M.G.RESISTOR	100 1/16W
R54	NRSA63J-101	M.G.RESISTOR	100 1/16W
R55	NRSA63J-101	M.G.RESISTOR	100 1/16W
R56	NRSA63J-101	M.G.RESISTOR	100 1/16W
R57	NRSA63J-101	M.G.RESISTOR	100 1/16W
R58	NRSA63J-101	M.G.RESISTOR	100 1/16W
R59	NRSA63J-101	M.G.RESISTOR	100 1/16W
R60	NRSA63J-101	M.G.RESISTOR	100 1/16W
R61	NRSA63J-101	M.G.RESISTOR	100 1/16W
R62	NRSA63J-101	M.G.RESISTOR	100 1/16W
R63	NRSA63J-101	M.G.RESISTOR	100 1/16W
R64	NRSA63J-101	M.G.RESISTOR	100 1/16W
R65	NRSA63J-101	M.G.RESISTOR	100 1/16W
R66	NRSA63J-101	M.G.RESISTOR	100 1/16W
R67	NRSA63J-101	M.G.RESISTOR	100 1/16W
R68	NRSA63J-101	M.G.RESISTOR	100 1/16W
R69	NRSA63J-101	M.G.RESISTOR	100 1/16W
R70	NRSA63J-101	M.G.RESISTOR	100 1/16W
R77	NRSA63J-151	M.G.RESISTOR	150 1/16W

[DIG I/O]

Symbol No.	Part No.	Part Name	Description	
R78	NRSA63J-102	M.G.RESISTOR	1.0K	1/16W
R79	NRSA63J-272	M.G.RESISTOR	2.7K	1/16W
R80	NRSA63J-102	M.G.RESISTOR	1.0K	1/16W
R81	NRSA63J-105	M.G.RESISTOR	1.0M	1/16W
R82	NRSA63J-392	M.G.RESISTOR	3.9K	1/16W
R83	NRSA63J-272	M.G.RESISTOR	2.7K	1/16W
R84	NRSA63J-272	M.G.RESISTOR	2.7K	1/16W
R85	NRSA63J-101	M.G.RESISTOR	100	1/16W
R86	NRSA63J-101	M.G.RESISTOR	100	1/16W
R87	NRSA63J-181	M.G.RESISTOR	180	1/16W
R88	NRSA63J-151	M.G.RESISTOR	150	1/16W
R89	NRSA63J-151	M.G.RESISTOR	150	1/16W
R90	NRSA63J-102	M.G.RESISTOR	1.0K	1/16W
R91	NRSA63J-680	M.G.RESISTOR	68	1/16W
R92	NRSA63J-101	M.G.RESISTOR	100	1/16W
R93	NRSA63J-103	M.G.RESISTOR	10K	1/16W
R95	NRSA63J-0R0	M.G.RESISTOR	0	1/16W
R96	NRSA63J-0R0	M.G.RESISTOR	0	1/16W
R201	NRSA63J-101	M.G.RESISTOR	100	1/16W
R202	NRSA63J-332	M.G.RESISTOR	3.3K	1/16W
R203	NRSA63J-103	M.G.RESISTOR	10K	1/16W
R205	NRSA63J-561	M.G.RESISTOR	560	1/16W
R206	NRSA63J-0R0	M.G.RESISTOR	0	1/16W
R207	NRSA63J-750	M.G.RESISTOR	75	1/16W
R208	NRSA63J-0R0	M.G.RESISTOR	0	1/16W
R209	NRSA63J-561	M.G.RESISTOR	560	1/16W
R210	NRSA63J-271	M.G.RESISTOR	270	1/16W
R211	NRSA63J-681	M.G.RESISTOR	680	1/16W
R212	NRSA63J-103	M.G.RESISTOR	10K	1/16W
R213	NRSA63J-103	M.G.RESISTOR	10K	1/16W
R214	NRSA63J-561	M.G.RESISTOR	560	1/16W
R215	NRSA63J-103	M.G.RESISTOR	10K	1/16W
R216	NRSA63J-750	M.G.RESISTOR	75	1/16W
R217	NRSA63J-0R0	M.G.RESISTOR	0	1/16W
R218	NRSA63J-470	M.G.RESISTOR	47	1/16W
R220	NRSA63J-470	M.G.RESISTOR	47	1/16W
R221	NRSA63J-470	M.G.RESISTOR	47	1/16W
R222	NRSA63J-470	M.G.RESISTOR	47	1/16W
R223	NRSA63J-470	M.G.RESISTOR	47	1/16W
R224	NRSA63J-470	M.G.RESISTOR	47	1/16W
R228	NRSA63J-470	M.G.RESISTOR	47	1/16W
R229	NRSA63J-0R0	M.G.RESISTOR	0	1/16W
R230	NRSA63J-0R0	M.G.RESISTOR	0	1/16W
R231	NRSA63J-0R0	M.G.RESISTOR	0	1/16W
R232	NRSA63J-103	M.G.RESISTOR	10K	1/16W
R233	NRSA63J-103	M.G.RESISTOR	10K	1/16W
R234	NRSA63J-103	M.G.RESISTOR	10K	1/16W
R235	NRSA63J-103	M.G.RESISTOR	10K	1/16W
R236	NRSA63J-103	M.G.RESISTOR	10K	1/16W
R237	NRSA63J-0R0	M.G.RESISTOR	0	1/16W
R238	NRSA63J-103	M.G.RESISTOR	10K	1/16W
R239	NRSA63J-0R0	M.G.RESISTOR	0	1/16W
R240	NRSA63J-0R0	M.G.RESISTOR	0	1/16W
R241	NRSA63J-0R0	M.G.RESISTOR	0	1/16W
R242	NRSA63J-0R0	M.G.RESISTOR	0	1/16W
RA1	NRB045J-101	R.NETWORK	100	
RA2	NRB082J-101	RESISTOR ARRAY	100	
RA3	NRB082J-101	RESISTOR ARRAY	100	

Symbol No.	Part No.	Part Name	Description	
RA5	NRB082J-101	RESISTOR ARRAY	100	
RA6	NRB082J-101	RESISTOR ARRAY	100	
RA7	NRB082J-101	RESISTOR ARRAY	100	
RA8	NRB082J-101	RESISTOR ARRAY	100	
RA9	NRB082J-101	RESISTOR ARRAY	100	
RA10	NRB082J-101	RESISTOR ARRAY	100	
RA11	NRB082J-101	RESISTOR ARRAY	100	
RA12	NRB082J-101	RESISTOR ARRAY	100	
C1	NCT06CH-470	CER.CAPACITOR	47P	50V
C2	NCF31CZ-104	CER.CAPACITOR	0.10	16V
C3	NCT06CH-6R0	CER.CAPACITOR	6.0P	50V
C4	NCB31HK-103	CER.CAPACITOR	0.010	50V
C5	NCF31CZ-104	CER.CAPACITOR	0.10	16V
C6	NEE21CM-685	TAN.CAPACITOR	6.8	16V
C7	NEE21CM-685	TAN.CAPACITOR	6.8	16V
C8	NCB31HK-332	CER.CAPACITOR	3300P	50V
C9	NCF31CZ-104	CER.CAPACITOR	0.10	16V
C10	NCF31CZ-104	CER.CAPACITOR	0.10	16V
C11	NCB31CK-823	CER.CAPACITOR	0.082	16V
C12	NEF11CM-105	TAN.CAPACITOR	1.0	16V
C13	NCF31CZ-104	CER.CAPACITOR	0.10	16V
C14	NCF31CZ-104	CER.CAPACITOR	0.10	16V
C15	NEF11CM-106	TAN.CAPACITOR	10	16V
C16	NCF31CZ-104	CER.CAPACITOR	0.10	16V
C17	NCF31CZ-104	CER.CAPACITOR	0.10	16V
C18	NCF31CZ-104	CER.CAPACITOR	0.10	16V
C19	NCF31CZ-104	CER.CAPACITOR	0.10	16V
C20	NCF31CZ-104	CER.CAPACITOR	0.10	16V
C21	NCF31CZ-104	CER.CAPACITOR	0.10	16V
C22	NCF21EZ-224	CER.CAPACITOR	0.22	25V
C23	NCF21EZ-224	CER.CAPACITOR	0.22	25V
C24	NEE51CM-476	TAN.CAPACITOR	47	16V
C25	NCF31CZ-104	CER.CAPACITOR	0.10	16V
C26	NCF31CZ-104	CER.CAPACITOR	0.10	16V
C27	NEE51CM-476	TAN.CAPACITOR	47	16V
C28	NCF31CZ-104	CER.CAPACITOR	0.10	16V
C29	NCF31CZ-104	CER.CAPACITOR	0.10	16V
C30	NCB31HK-103	CER.CAPACITOR	0.010	50V
C31	NCB31HK-103	CER.CAPACITOR	0.010	50V
C32	NCB31HK-103	CER.CAPACITOR	0.010	50V
C33	NCS31HJ-101	CER.CAPACITOR	100P	50V
C34	NFV41CJ-104	F CAP	0.10	16V
C35	NCT06CH-100	CER.CAPACITOR	10P	50V
C36	NCB31HK-103	CER.CAPACITOR	0.010	50V
C37	NCT06CH-150	CER.CAPACITOR	15P	50V
C38	NCT06CH-5R0	CER.CAPACITOR	5.0P	50V
C39	NCT06CH-180	CER.CAPACITOR	18P	50V
C40	NEF11EM-474	TAN.CAPACITOR	0.47	25V
C41	NCB31HK-103	CER.CAPACITOR	0.010	50V
C42	NCB31HK-103	CER.CAPACITOR	0.010	50V
C43	NCB31HK-103	CER.CAPACITOR	0.010	50V
C44	NEH91CM-476	E.CAPACITOR	47	16V
C45	NCF31CZ-104	CER.CAPACITOR	0.10	16V
C46	NCF31HZ-223	CER.CAPACITOR	0.022	50V
C47	NEE51CM-476	TAN.CAPACITOR	47	16V
C48	NCF31CZ-104	CER.CAPACITOR	0.10	16V
C49	NCF31CZ-104	CER.CAPACITOR	0.10	16V
C50	NEE51CM-476	TAN.CAPACITOR	47	16V

Symbol No.	Part No.	Part Name	Description	
C51	NCF31CZ-104	CER.CAPACITOR	0.10	16V
C52	NCF31CZ-104	CER.CAPACITOR	0.10	16V
C53	NCF31CZ-104	CER.CAPACITOR	0.10	16V
C54	NEE51CM-476	TAN.CAPACITOR	47	16V
C55	NCF31CZ-104	CER.CAPACITOR	0.10	16V
C56	NCF31CZ-104	CER.CAPACITOR	0.10	16V
C57	NEE51CM-476	TAN.CAPACITOR	47	16V
C58	NCF31CZ-104	CER.CAPACITOR	0.10	16V
C59	NCF31CZ-104	CER.CAPACITOR	0.10	16V
C60	NCF31CZ-104	CER.CAPACITOR	0.10	16V
C61	NCF31CZ-104	CER.CAPACITOR	0.10	16V
C62	NCF31CZ-104	CER.CAPACITOR	0.10	16V
C63	NCF31CZ-104	CER.CAPACITOR	0.10	16V
C64	NCF31CZ-104	CER.CAPACITOR	0.10	16V
C65	NCS31HJ-220	CER.CAPACITOR	22P	50V
C66	NCT06CH-6R0	CER.CAPACITOR	6.0P	50V
C67	NCS31HJ-820	CER.CAPACITOR	82P	50V
C68	NCF31CZ-104	CER.CAPACITOR	0.10	16V
C69	NCF31CZ-104	CER.CAPACITOR	0.10	16V
C70	NCF31CZ-104	CER.CAPACITOR	0.10	16V
C71	NCF31CZ-104	CER.CAPACITOR	0.10	16V
C72	NCF31CZ-104	CER.CAPACITOR	0.10	16V
C73	NCF31CZ-104	CER.CAPACITOR	0.10	16V
C74	NCF31CZ-104	CER.CAPACITOR	0.10	16V
C75	NCF31CZ-104	CER.CAPACITOR	0.10	16V
C76	NCB31HK-103	CER.CAPACITOR	0.010	50V
C77	NEE51CM-476	TAN.CAPACITOR	47	16V
C78	NCF31CZ-104	CER.CAPACITOR	0.10	16V
C79	NCF31CZ-104	CER.CAPACITOR	0.10	16V
C80	NCF31CZ-104	CER.CAPACITOR	0.10	16V
C81	NCF31CZ-104	CER.CAPACITOR	0.10	16V
C82	NCF31CZ-104	CER.CAPACITOR	0.10	16V
C83	NEE51CM-476	TAN.CAPACITOR	47	16V
C84	NCF31CZ-104	CER.CAPACITOR	0.10	16V
C85	NCF31CZ-104	CER.CAPACITOR	0.10	16V
C86	NCF31CZ-104	CER.CAPACITOR	0.10	16V
C87	NCF31CZ-104	CER.CAPACITOR	0.10	16V
C88	NEE51CM-476	TAN.CAPACITOR	47	16V
C89	NCF31CZ-104	CER.CAPACITOR	0.10	16V
C90	NCF31CZ-104	CER.CAPACITOR	0.10	16V
C91	NEE51CM-476	TAN.CAPACITOR	47	16V
C92	NCF31CZ-104	CER.CAPACITOR	0.10	16V
C93	NEE51CM-476	TAN.CAPACITOR	47	16V
C94	NCF31CZ-104	CER.CAPACITOR	0.10	16V
C95	NCF31CZ-104	CER.CAPACITOR	0.10	16V
C96	NCF31CZ-104	CER.CAPACITOR	0.10	16V
C97	NCF31CZ-104	CER.CAPACITOR	0.10	16V
C98	NCT06CH-100	CER.CAPACITOR	10P	50V
C99	NCF31CZ-104	CER.CAPACITOR	0.10	16V
C100	NCF31CZ-104	CER.CAPACITOR	0.10	16V
C101	NCT06CH-180	CER.CAPACITOR	18P	50V
C102	NCF31CZ-104	CER.CAPACITOR	0.10	16V
C103	NCF31CZ-104	CER.CAPACITOR	0.10	16V
C104	NCF31CZ-104	CER.CAPACITOR	0.10	16V
C105	NCF31CZ-104	CER.CAPACITOR	0.10	16V
C106	NCF31CZ-104	CER.CAPACITOR	0.10	16V
C107	NCF31CZ-104	CER.CAPACITOR	0.10	16V
C108	NEE51CM-476	TAN.CAPACITOR	47	16V
C109	NCF31CZ-104	CER.CAPACITOR	0.10	16V
C110	NEF11CM-106	TAN.CAPACITOR	10	16V

Symbol No.	Part No.	Part Name	Description	
C111	NCF31CZ-104	CER.CAPACITOR	0.10	16V
C112	NCF21CZ-105	CER.CAPACITOR	1.0	16V
C113	NCT06CH-2R0	CER.CAPACITOR	2.0P	50V
C114	NCF31CZ-104	CER.CAPACITOR	0.10	16V
C115	NCF31CZ-104	CER.CAPACITOR	0.10	16V
C116	NEE51CM-476	TAN.CAPACITOR	47	16V
C117	NEH91CM-476	E.CAPACITOR	47	16V
C118	NEH91CM-476	E.CAPACITOR	47	16V
C119	NCF31CZ-104	CER.CAPACITOR	0.10	16V
C201	NCB31HK-103	CER.CAPACITOR	0.010	50V
C202	NEH91CM-476	E.CAPACITOR	47	16V
C203	NCT04CH-472	CER.CAPACITOR	4700P	50V
C204	NCB31HK-103	CER.CAPACITOR	0.010	50V
C205	NCB31HK-103	CER.CAPACITOR	0.010	50V
C206	NCB31HK-103	CER.CAPACITOR	0.010	50V
C207	NCB31HK-103	CER.CAPACITOR	0.010	50V
C208	NCB31HK-103	CER.CAPACITOR	0.010	50V
C209	NCB31HK-103	CER.CAPACITOR	0.010	50V
C210	NCB31HK-103	CER.CAPACITOR	0.010	50V
C211	NCF31CZ-104	CER.CAPACITOR	0.10	16V
C212	NCB31HK-103	CER.CAPACITOR	0.010	50V
C213	NEH41EM-106	E.CAPACITOR	10	25V
C214	NCB31HK-103	CER.CAPACITOR	0.010	50V
C215	NEH91CM-226	E.CAPACITOR	22	16V
C216	NCB31HK-103	CER.CAPACITOR	0.010	50V
C217	NCB31HK-103	CER.CAPACITOR	0.010	50V
C218	NEH41EM-226	E.CAPACITOR	22	25V
C219	NCB31HK-103	CER.CAPACITOR	0.010	50V
C220	NCB31HK-103	CER.CAPACITOR	0.010	50V
C221	NCB31HK-103	CER.CAPACITOR	0.010	50V
C222	NEH91CM-476	E.CAPACITOR	47	16V
C224	NCB31HK-103	CER.CAPACITOR	0.010	50V
C225	NCB31HK-103	CER.CAPACITOR	0.010	50V
C226	NCB31HK-103	CER.CAPACITOR	0.010	50V
C229	NCB31HK-103	CER.CAPACITOR	0.010	50V
L1	PU58201-1R8	COIL	1.8μH	
L2	PU58201-680	COIL	68μH	
L201	YU41134-220	COIL	22μH	
L202	YU41134-220	COIL	22μH	
LC1	PGZ01972	NOISE FILTER		
LC2	PGZ01972	NOISE FILTER		
LC3	PGZ01972	NOISE FILTER		
LC4	PGZ01972	NOISE FILTER		
LC5	PGZ01972	NOISE FILTER		
LC201	PGZ01972	NOISE FILTER		
X1	PGZ02178	CHRYSTAL	54MHz	
S201	SSV2664	SLIDE SWITCH	1V / 3V	
CN1	PGZ02142-120	CONNECTOR	120PIN	
CN2	PGZ02142-100	CONNECTOR	100PIN	
CN3	SSV2298-001	RF CONNECTOR	DGTL VIDEO IN	
CN4	SSV2298-001	RF CONNECTOR	DGTL VIDEO OUT	
CN201	SSV2298-001	RF CONNECTOR	DGTL AUDIO IN	

[DIG I/O]

Symbol No.	Part No.	Part Name	Description
CN202	SSV2298-001	RF CONNECTOR	DGTL AUDIO OUT
TP1	SSV1096-001	TEST POINT	
TP2	SSV1096-001	TEST POINT	
TP3	SSV1096-001	TEST POINT	
TP4	SSV1096-001	TEST POINT	
TP5	SSV1096-001	TEST POINT	
TP6	SSV1096-001	TEST POINT	
TP7	SSV1096-001	TEST POINT	
TP8	SSV1096-001	TEST POINT	
TP9	SSV1096-001	TEST POINT	
TP10	SSV1096-001	TEST POINT	
TP11	SSV1096-001	TEST POINT	
TP12	SSV1096-001	TEST POINT	
TP13	SSV1096-001	TEST POINT	
TP14	SSV1096-001	TEST POINT	
TP15	SSV1096-001	TEST POINT	
TP16	SSV1096-001	TEST POINT	
TP17	SSV1096-001	TEST POINT	
TP18	SSV1096-001	TEST POINT	
TP19	SSV1096-001	TEST POINT	
TP20	SSV1096-001	TEST POINT	
TP21	SSV1096-001	TEST POINT	
TP22	SSV1096-001	TEST POINT	
TP23	SSV1096-001	TEST POINT	
TP24	SSV1096-001	TEST POINT	
TP25	SSV1096-001	TEST POINT	
TP26	SSV1096-001	TEST POINT	
TP27	SSV1096-001	TEST POINT	
TP28	SSV1096-001	TEST POINT	
TP51	SSV1096-001	TEST POINT	
TP52	SSV1096-001	TEST POINT	
TP53	SSV1096-001	TEST POINT	
TP54	SSV1096-001	TEST POINT	
TP55	SSV1096-001	TEST POINT	
TP56	SSV1096-001	TEST POINT	
TP57	SSV1096-001	TEST POINT	
TP58	SSV1096-001	TEST POINT	
TP59	SSV1096-001	TEST POINT	
TP201	SSV1096-001	TEST POINT	
TP202	SSV1096-001	TEST POINT	
TP203	SSV1096-001	TEST POINT	
TP204	SSV1096-001	TEST POINT	
TP205	SSV1096-001	TEST POINT	
TP206	SSV1096-001	TEST POINT	
TP207	SSV1096-001	TEST POINT	
TP208	SSV1096-001	TEST POINT	
K1	PGZ01693-009	FERRATE BEADS	
K2	PGZ01693-009	FERRATE BEADS	
K3	PGZ01693-009	FERRATE BEADS	
K4	PGZ01693-009	FERRATE BEADS	
K5	PGZ01693-009	FERRATE BEADS	
K201	PGZ01693-009	FERRATE BEADS	
TB1	PGZ02228	EARTH LUG	
TB2	PGZ02228	EARTH LUG	
TB3	PGZ02228	EARTH LUG	
TB4	PGZ02228	EARTH LUG	

SECTION 7

REPACKING

SECTION 7
REPACKING

7.1 PACKING ASSEMBLY M1

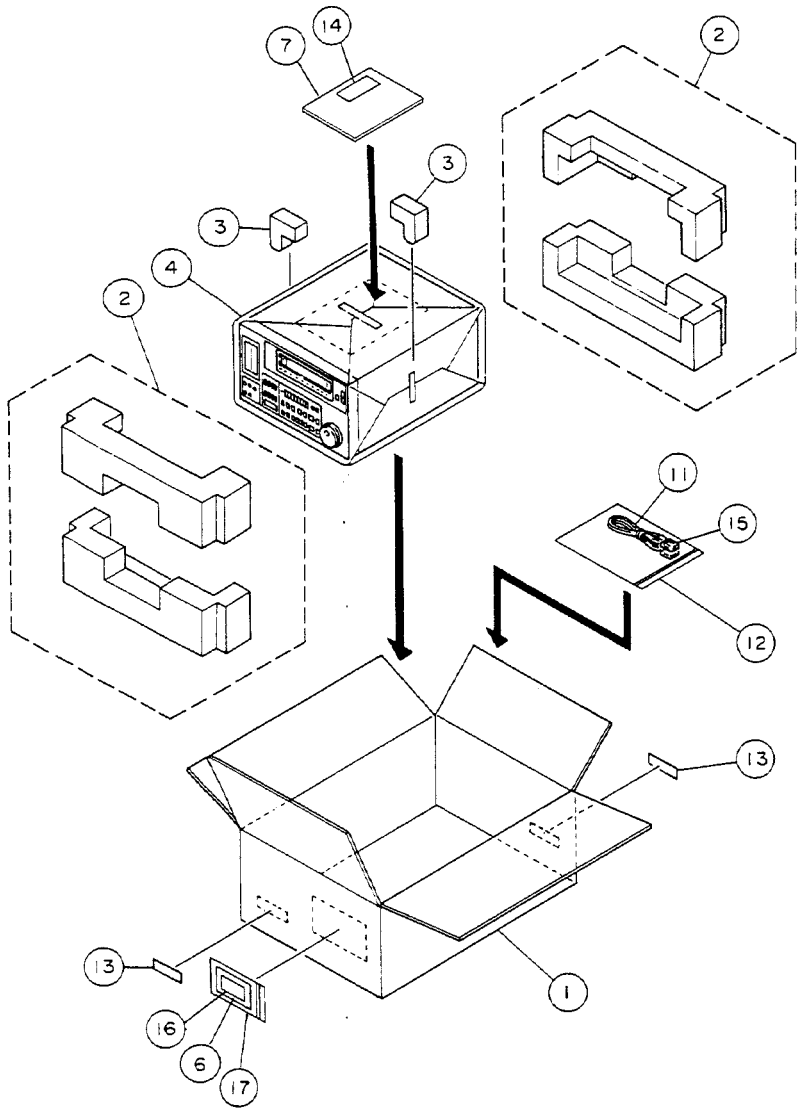

• When shipped from the factory the switches and VR's are set as shown below tables.

NAME (FRONT PANEL)	POSITION
VIDEO INPUT	LINE
AUDIO INPUT	ANA
AUDIO MONITOR	MIX
COUNTER	TC
REMOTE	LOCAL
TIME CODE	INT
	REC
	PRESET
AUDIO REC LEVEL	
DA-1	CENTER
DA-2	CENTER
TRACKING	CENTER
VIDEO CONTROL	
SYSTEM PHASE	CENTER
SC PHASE	CENTER
VIDEO PHASE	CENTER

NAME (REAR PANEL)	POSITION
VIDEO IN REF-75Ω	ON
AUDIO IN LEVEL	-6dB
AUDIO OUT LEVEL	-6dB

• PACKING ASSEMBLY LIST M1

M1MM□□□□

Symbol No.	Part No.	Part Name	Description
1	PRD20535-06	PACKING CASE	
2	PRD10251A-03	PACKING CUSHION	
3	PRD30848	SPACER CUSHION	X2
4	PGD30005-05	POLY BAG	
6	BT-51010-1	WARRANTY CARD	
7	SL96064	INST BOOK	
11	QMP9003-022	POWER CORD	
12	QPGB020-02804	POLY BAG	
13	PUP40329	SERIAL NO.STICKER	X2
14	PU33941-3-3	SAFETY GUIDE	
15	PUP40003-7	AIR CAP	
16	BT-20104A	SERVICE INFOMATION CARD	
17	PU54821	POLY BAG	

SECTION 8

CIRCUIT DESCRIPTION

Table of contents

8.1 VIDEO CIRCUIT 8-1
8.1.1 ANALOG IN 8-1
8.1.2 PV PROCESS BOARD 8-2
8.1.3 REC/ITI BOARD 8-4
8.1.4 PV PRE BOARD 8-5
8.1.5 RF PROCESS-1,2 8-6
8.1.6 OUT MEM PWB 8-7
8.1.7 OUT ENCODER PWB 8-8
8.1.8 OUT GENERATOR BOARD 8-9
8.1.9 DIGITAL I/O BOARD 8-10
8.2 AUDIO CIRCUIT 8-12
8.2.1 AUDIO I/O PWB 8-12
8.2.2 DIGITAL AUDIO PWB 8-12
8.2.3 ANALOG AUDIO PWB 8-14
8.3 CONTROL SYSTEM 8-15
8.3.1 OUTLINE OF THE SYSTEM CONFIGURATION 8-15
8.3.2 JVC BUS 8-15
8.3.3 CPU FUNCTION SHARING 8-16
8.3.4 EEPROM MEMORY DATA 8-17
8.3.5 DRUM SERVO CIRCUIT 8-17
8.3.6 CAPSTAN SERVO CIRCUIT 8-18
8.4 GENERAL SIGNAL FLOW 8-20
8.5 INCOMING SECTION OF VIDEO RECORDING BLOCK 8-20
8.6 JCL0032 PROCESS IN VIDEO RECORDING BLOCK 8-20
8.7 OUTPUT SECTION OF RECORDING BLOCK 8-20
8.8 OTHER SIGNALS IN VIDEO RECORDING BLOCK 8-20
8.9 VIDEO PLAYBACK BLOCK 8-21
8.10 OTHER CIRCUIT IN VIEO PLAYBACK BLOCK 8-21
8.11 AUDIO RECORDING BLOCK 8-21
8.12 PLAYBACK BLOCK OF DIGITAL AUDIO 8-21

SECTION 8
TECHNICAL INFORMATION

8.1 VIDEO CIRCUIT

8.1.1 ANALOG IN

(1) GENERAL SIGNAL FLOW

Schematic diagram is consisted with three pages. Block diagram shows signal flow for all three pages in one sheet.
Page 1 shows the composite video and Y/C input circuits, including YC separation and decoding circuit to component signals Y, R-Y and B-Y. Page 2 shows component signal input process including clamping and sync separation. Page 3 is A/D conversion and digital processing to the standard bus format sending out to the mother board.

(2) COMPOSITE AND Y/C INPUT (1/3)

These signals come in from REAR board via mother-1 and CN2 19A through 21B. Composite signal is processed to the right up to TP4, then fed to IC10, CXD2024AD for Y/C separation. Separated Y and C goes to the switching circuit of IC13 and IC16 where selection is done with Y/C input signal is done. Part of Y signal is then sent to component circuit for further processing. C signal is then decoded by IC18 to R-Y and B-Y signal and sent out to component circuit.
See the block diagram of each step functions and details.

There are a few circuits not showing on the block diagram. Within the C signal processing, there is IC14 between Q14 and Q16. It is to clean the residual chroma in H SYNC and Burst area. Driven by the timing signal obtained in the pulse generating block in the bottom, Q15 switches the signal path to the one with capacitor C73 which bypass the chroma frequency during this period.

Q27 and Q202 hung down from the clock signal circuit of IC18 M51271 chroma decoder. These are to kill the clock signals while no input video is detected. Detection is done in IC26 exclusive OR IC26, checking sync signals both from composite and Y/C which is obtained from IC18. The output of EX-OR normally keeps re-triggering one shot of IC27. When sync signal stops, then this one shot stops and negative output becomes high to drive above two transistors.

(3) COMPONENT CIRCUIT (2/3)

R-Y, B-Y and Y input signals are coming in from REAR board via mother board and CN2 22A through 24B. After the level adjustment circuit, there are switching circuits where decoded component signals from composite and Y/C join for selection.

These signals are processed for delay and clamping almost in the same circuit. Sync separation and clamping pulse circuits are located in the bottom side. VITC separation is also done at the end of Y signal path. See the block diagram for the details.
Within this signal flow, only R-Y and B-Y have delay by IC 304 and IC312, 100 nsec voltage control delay line. It is to adjust the precise delay which cannot cover the clock unit delay function equipped in IC607 JCL0026 on page 3/3.
These delay functions are for adjusting the timing difference between Y and each C occurring due to various filters within thesignal process.

(4) DIGITAL PROCESSING (3/3)

Component signals fed from left side are first A/D converted by IC602, IC604 and IC606, CXD1175AM with 13.5 MHz master clock. These digitized 8 bit signals are fed to IC607 JCL0026 to be multiplexed format with 27 MHz clock rate. See Fig. 8-1-1 for timing chart. These signals are split in two streams and buffered in differential output pairs for each bits, then sent out to motherboard.

On the mother board, these signals are in the bus connected to the signals from other boards in the same format. VPB/EEn, where n stands for the numbers 0 through 7, meets with the ones from DIG I/O, PV PROCESS and destination is OUT MEM. These signal from this board is only active when input select is Analog and the mode is EE. On this condition, the signal is fed to OUT MEM and after for E-E signal processing. In other modes the out put is suspended to high impedance to avoid the conflict with other boards.

VRECn signals meets with the ones from DIG I/O, and destination is PV PROCESS board. It is only activated when Analog In is selected. This is for recording signal flow.

(5) CLOCK GENERATOR BLOCK

Clock signals are generated by IC620 uPC2384; and IC626 JCL0024. IC620 has 54 MHz VCO sending out 27 MHz and 18 MHz. These are sent in IC607 and counted down 13.5 MHz is obtained and it is fed to IC626, another clock generator. This is driven by 13.5 MHz and generating F, H, HD and others.

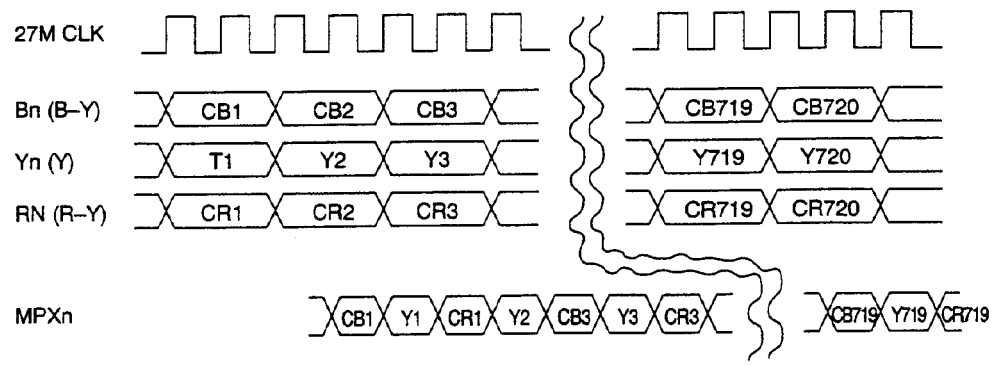

Fig. 8-1-1

HD signal out of this IC is phase shifted and go back to IC620 to be compared in phase with original HD obtained from analog video signal. The output of this phase comparator goes back to control the 54 MHz VCO. This is the loop of stabilizing the clock with Horizontal frequency, and V SYNC signal fed to VR, Vertical Reset, in IC626 is fro vertical timing control.

HD phase shift is done by IC625, dual one shot multivibrators. First one shot is triggered by HD falling edge to generate the shift width pulse which is given to the second one shot to start from the falling edge of the first one shot. Then the output of the second one shot 2Q1 is given as shifted HD. In the first one shot, negative output 1Q2 is integrated and compared to fixed DC voltage by IC624 comparator, which outputs error voltage. This is connected to R660 to modify the time constant of the first one shot, consequently forms the loop to stabilize the one shot period.

8.1.2 PV PROCESS BOARD

(1) GENERAL FLOW

RECORDING PATH

Parallel digital VIDEO DATA come in and are processed through the steps of "SHUFF", "DCT", "ECC" AND "DCI-R", and finally goes out to REC ITI board as the final recording format on the tape. AUDIO DATA encoded in DIG AUD board comes in and it is fed to the BUS between DCT and ECC, mixed with Video data, and processed together.

PLAYBACK PATH

Play back signal comes from RF Process board, goes through "DCI-P" and "ECC" where Audio data are split and sent out to DIG AUD board. Video main data stream goes through the steps of "DCT" and "SHUFF", then finally goes out to the Parallel digital BUS in the MOTHER BOARD-1. Trough this BUS, the data goes through OUT MEM board and after for analog signal recovery and DIG I/O board process the encoding of SDI signal on the other hand.

I2C BUS

Each signal processing steps are handled in each LSI's. To control and monitor these IC's, PV Micro processor is communicating through the serial data Bus.

(2) SHUFF (REC) IC3 JCL0028

Shuffling stage is constructed with one SHUFF LSI and four memory chips, uPD489001GC, IC4 through 7. For the explanation purpose each can be names as SMA0, SMB0, SMA1 and SMB1. This memory chip is 4.75 Mbit size, having two I/O ports with shift register so that by using SIC or SOC clock input, you can write or read 8 byte in series. The address pins are commonly connected with IC3 address bus.
On the IC3, the data comes in through pins YCRBSI-n, where "n" means 0 to 7. The data is first broken down to Y, Cr and Cb and realigned as DSFLAn and DSFLBn in 18 MHz rate appearing at thepins in the same name.
The contents of each streams have strings of Y by 8 byte blocks or strings of Cr,Cb by 8 byte blocks. The combination changes by 12 lines each.

These data are written to one pair of memory chips, for instance SMA0 and SMB0, while other pair SMA1 and SMB1 is read. This assignment rotates by one frame. Shuffling is done by reading out with random addressing but in a predetermined order. Read out data then come back to IC3 through pins named DSFRAn and DSFRBn. Y data and Cr/Cb are rearranged in IC3 to put out A-CH data and B-ch data each. Those are sent to DCT stage for compression.

(3) DCT (REC) IC 9 & 11, MN67371F

The data are compressed within these IC's for each channel. Input clock rate is 18 MHz but output is 9 MHz and vacant place for audio data. "REC" signal at pin 29 is to assign this chip to REC mode. This information is given by SHUFF chip as DCT chip does not have direct communication with PV microprocessor. 9 MHz clock is given by ECC chip located in next step. BQUIET signal is sent from DCT to the AUDIO chip on the DIG AUD board to suspend output data prior to the timing when DCT data output. Audio data are then sent out to the bus next.

(4) ECC (REC) IC12 & IC14, L7A1433

Compressed video data and shuffled audio data comes in to this ECC LSI. Both data are read in good order as described earlier. Parity codes are added for error correction within this chip. As described on Fig. , parity codes are added for column group which is called OUTER CODE, and parity codes for each raw is called INNER CODE. Also SUB CODE coming from system control joins and parity is added as well.

On the schematic diagram, Video and Audio data are supplied through BDn, data bus port. Clock 18 MHz and other control lines are fed too. Only the BDCK 9 MHz clock is the output fed back to DCT stage, which is counted down from the 18 MHz clock within the ECC chip.

Sub code data are given through TMDTn data port together with control lines such as TMSTB and TMBNK, which are sent from PV microprocessor.
Memory chips IC13 & IC15 are used for ECC processing. 4 Mbit DRAM with 16 bit data bus is used in order to save the time loss of frequent data correspondence when generating error correction codes.
Data output at DEDRn port in the form of 4 bit with 18 MHz clock rate. One byte (8 bit) data are split to "4 bit x 2" and sent out Higher bits and Lower bits.

(5) DCI (REC), IC19, JCL0029

In this LSI, data given from ECC are re-arranged to the actual recording order on the recording head, and coded to the serial recording signals with 24-25 modulation method for each head channels.
On the schematic diagram of this stage, channel A data come in at DEDRAn 4 bit port, and channel B data at DEDRBn.
Both are 4 bit data as described earlier. Both video and audio data are re-arranged in the PV recording format order, adding three ITI sectors in between each signal data, and putting Gaps between each sectors. And finally 24-25 modulated signals are sent out at pins HSE1 and HSE2 in serial data with 49.5 MHz rate. Those two signals for each channel are converted to balance signal by IC21 line driver, then sent out to REC/ITI board. Additionally, other control signals are sent to the same board.

Memory chips, IC17 & IC19, TGS28267FT are used for rearranging data. It has 262K x 8 bit DRAM (2Mbit) with 512 x 8 bit Serial Access Memory. IC18 & IC20 are to convert logic level from 5 V to 3 V.

One important timing signal is HIDR which is coming from MCTL board. It derives from actual drum rotation. Up to the input of DCI chip, the data is locked to the stable clock from the generator chip, but within the DCI, signal processing is based on this HIDR signal so that the recording signal pattern is written more accurately on the tape.

(6) DCI PB, IC31, JCL0030

PB signals come into this board through CN1 pins 52A through 58B from RF PROCESS-1 and RF PROCESS-2 via two mother boards. These signals first go through the line buffer IC24. The signals are data and clock for each CH-1 and CH-2, total four lines. Those go through 3V buffer IC25 TC74VHC125 not only for level conversion but to disable the lines while DCI RETURN signals are chosen. DCI RETURN signals come from DCI REC chip directly to form a signal loop up to the end of digital processing, in order to check or troubleshoot the failure on the digital signal path. The select signal DCI_RET comes out of PV microprocessor depending on the service menu setting. Direct signals from DCI REC chip goes through a logic circuit block before the switching circuit. This block is consisted with two D-FLIP FLOP's and an EX-OR. This is to simulate the processing done within the RF PROCESS board for playback signals.

Within DCI PB chip, clock signal is generated with PLL from the playback signal first, then the data streams are written on external memory chips IC32 and IC35 with this clock signal. Data once stored in these chips are then read out by system clock CLK18 in the order of the defined form between DCI and ECC. Also some additional information such as header data are added, or they are modified in the predetermined format depending on the playback modes, Normal speed, Slow speed, forward or reverse. Data stream come out of pins 11 through 15 and 23 through 27 in 4bit data with start pulse SBSTPC and SBSTPD, and sent to ECC LSI.

Out put signals on pin89,108, 111 through 121 are head switching pulses and track number information sent to MCTL and RF process. Pins 35 through 38 are the information or timing for insert recording. These are sent to DCI REC LSI.

(7) ECC and DCT, IC40, IC42, IC44, IC46

The data streams are fed to this block and error correction and de-compression is done. The same chips as play back circuit are used in this circuit block.

The data first goes through a PLD chip, IC28 EPM032VT-20-001. The purpose is just to compliment some function to ECC chip for error correction. Basically the data format goes through in the same format. Within ECC chip, error correction is done and SUB CODE information is split, sent out through pins 24 through 30.

SBE signal at pin 121 is Sync Block Error pulse which stand for error counting inside the ECC. It is sent to DCI chip and counted and compared to the pre-determined threshold level within DCI chip. The result is sent to PV microprocessor through I2C and eventually it appears as driving control for LED indicators on OPERATION board.

Processed data streams comes out of ECC chip at pins 41 through 48 as BDn, in 8 bit data bus and fed to DCT LSI, as well as PV AUDIO LSI in the names of BDC and BDD.
FEND signal out of pin 59 stand for Frame End pulse, is a flag indicating the timing when frame length data storage is completed on the memory in various playback mode such as STILL or SLOW.

Data streams out of ECC chips in compression form same as in recording, are now fed to DCT chip for de-compression and come out of pins 6 through 9 and 17 through 20 and are sent to SHUFF LSI.

(8) SHUFF IC55

The same chip is used as recording circuit. Memory chips are the same. Data streams from ECC together with FRP and FEND come into SHUFF LSI for de-shuffling in the reverse processing of recording process. Output of this LSI is at pins 172 through 181, go through line buffers IC60 and IC61 and go out of card edge connector to MOTHER-1 board in the form of parallel digital video. Data stream goes to DIG I/O and OUT MEM board in parallel. DIG I/O processes the data to SDI signal and outputs from the back panel BNC connector, while D/A and encoding process are done after OUT MEM board for analog video signal outputs.

(9) AUDIO REC IC304 & IC305, M65401

There are two signal sources for audio signal, one from AES/EBU digital audio and another from analog input. Digital audio data from DIG I/O board come through CN2 5B and 5A together with MCK master clock, BCK bit clock, LRCK LR clock and REC MUTE. Those go through 3V line buffer IC301 and fed to AUD LSI at pins 8 and others on IC304.
Two same chips are used to handle two channels each. Channel B signal is fed to the same pins on IC305.

On the other hand, analog audio signal is AD converted within DIG AUD board and the data are fed from CN2 7B and 7A. Those are fed to each chips at pin 15. AUDIO LSI have also have I2C port to receive the command from PV microprocessor. To select the data from two inputs pin 8 or pin 15 is controlled by the I2C command.

OUT PUT from this chip is the standard bus with 8 bit data, which is at pins 39 through 49. These data streams from both chips are sent to ECC and join to the bus from DCT in parallel. Another output DODAT with related clock signals at pins 18 through 21, they are not used on this model. In the REC mode on this chip this output can be used as E-E data, but E-E path is formed in the different place on this model.

There is another data stream at pins 58 through 62, SASDATn and SASEN, coming in from SHUFF LSI. These are VAUX data sent from SHUFF LSI. This information includes video source information such as B/W flag, format information such as scanning rate, and two extra video line data. They are originated from the PV microprocessor and sent in SHUFF LSI, then comes in AUDIO instead of DCT, and goes out to ECC to be combined in the main data stream.

(10) AUDIO PB, IC313 & IC316

Same chips are used for playback processing.
IC14 M52660FP is a 3 channel VCO chip for digital audio, having three types of VCO frequency capability. On this circuit it is fixed to generate 12.288 MHz, 256 fs for 48KHz.

Main data streams from ECC chips come in to AUDIO LSI's at pins 39 through 49 including clock and control lines.
Within this chip, de-shuffling is done, AUX data are separated and sent to SHUFF LSI from SASDATn port, data rate is converted to serial data format based on DIG AUD master clock, 256 fs fed from pin 27.

IC14 forms PLL circuit to have the output data locked to 256 fs. Out of IC313 at pin 55, PWM0 the output of phase comparator comes out and goes to IC314 at pin 35, the input of comparator. The output of this comparator comes out of pin 37 and fed to all three VCIN's on the same chip. Actually as mentioned earlier, only VCO3 12.288 MHz is used and comes out at pin 29.

The selection of VCO is done by combination of logic levels of FS0IN and FS1IN at pins 27 and 28 on the same chip.
Another output clock from PLL, PB MCK is sent back to AUDIO REC chip to change the master clock when insert mode. PBVSOC is not in use in AUDIO REC chips though it is connected.

Output data streams including related clocks, coming out of pins 18 through 21 on IC313 and IC316 each, then sent out to DIG AUD board at card edge connector CN2.

8.1.3 REC/ITI BOARD

(1) GENERAL SIGNAL FLOW

Recording data, clock, control signals from DCI LSI on PV PROCESS board come into this board from CN5 and CN3 via Mother board. Head switching and buffers are located on the left down in the schematic diagram.
In the middle toward right side end, there are four similar circuit blocks consisted with several transistors. Those are the head amplifiers for each heads, A, C, B and D from left to right. Head recording current signals are coming out of the top of each blocks and go out at CN1 to be sent out to rotary trans in the head drum.
On the right down corner is the playback circuit with REC head, but it is not part of the main flow of the playback signal processing.It is to keep the tracking by reading the ITI signal during insert recording.
On the left up, there are switching circuit of recording current reference signal from RF PROCESS board.

(2) INPUT BLOCK

Recording signals for each channels coming in as RDAT1 and RDAT2, as well as 49.5 MHz clock XO495CK through CN5. These are all in differential logic and buffered with IC6.
Data signals once come in to IC13 TC74VHC153 at 1C3 and 2C3 each. This IC is dual 4 channel multiplexer and outputs are 1Y and 2Y. The selection is done by A and B inputs, connected to RDATSEL1 and RDATSEL2 each from CN6. These are coming from RF PROCESS board and normally the logic is both H, which selects the main data flow channel. See Fig. 8-1-3(a).

Other inputs are connected to Q1, Q2 and Q3 of the IC11, TC74HC4040 the ripple counter just counting the 49.5 MHz clock. These count down clocks are only selected during the auto adjustment mode for head recording current. The adjustment mode is carried on automatically selecting the various frequency of signals and repeat recording and playback.

Out of this multiplexer the main data signals are once latched by the D-Flipflop then buffered again to the differential driving signals for head recording amplifiers.

(3) HEAD AMPLIFIER

As four circuits are similar, explanation just describes on head-A circuit. Differential signals are applied to Q11 and Q14 and they drive Q12 and Q13. Collectors of these transistors are connected to T1 on top which is a transformer having center tap in the primary coil and DC 12 V is supplied from here. The secondary coil is connected to the recording head, actually to rotary transformer in the drum.

The current out of Q12 and Q13 Emitters go through Q15 to −15V line. The current is controlled by the voltage applied to Q16 which is driving Q15. Q17 and Q18 cuts off the current by disabling Q15 while RCTLA signal is low which is applied to Base of Q18 via buffers IC27and IC20. At the output, there are FET's across the Collectors of Q12 andQ13. This is to control the frequency response by the voltage applied from RF PROCESS board, FCAL1.

(4) PLAY BACK CIRCUIT

Although the recording amplifiers are designed in differential driving, actually heads B and D are in the single driving control due to the additional playback function.
Transistors Q44 and Q46 attached to REC B(C) and REC D(C) lines are activated during playback, and Q48 and Q49 for REC B(H) andREC D(H) are activated during recording.

Playback signals are fed to IC34 in the right down corner of the schematic diagram, at pins 6 and 5. Signals are amplified and switched within the IC by the head switching pulse HIDR2 applied to pin 19.
Output is obtained from pin 21 and amplified more by Q58 and Q47, then sent out at pin 3 of CN2 which eventually goes to MCTL board.

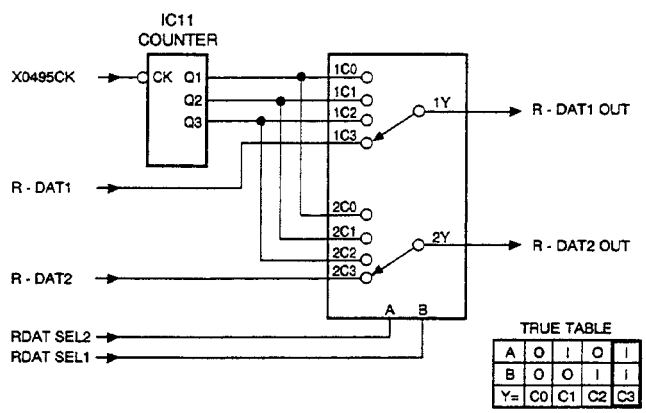

Fig. 8-1-3(a)

(5) REC CURRENT CONTROL BLOCK

Control voltage comes from RF PROCESS board via CN6 at pins 4 and 5, RCAL1 and RCAL2 for each channels.Control signal is basically DC but alternating two different levels periodically in head switching timing, because one channel line stands for two head amplifiers. The wave form looks like square wave with very slight DC level difference. See Fig. 8-1-3(b).

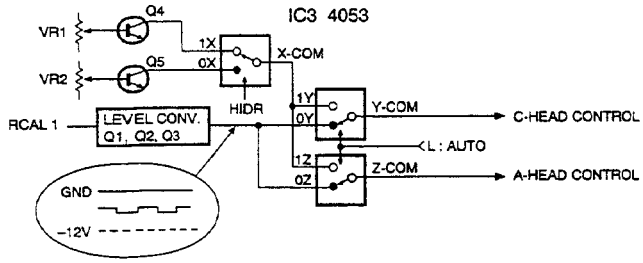

Fig. 8-1-3(b)

These signals goes through Q1, Q2, and Q3; or Q6, Q7 and Q8 to convert the level to match the range of +5 V to -12 V. Then they are applied to IC3 and IC6 each, TC4053, triple analog switch. Selection of the switch, B and C are connected to L-AUTO which coming from RF PROCESS board. It is fixed to L all the time to select RCAL1 and RCAL2 in the normal condition. If it became H, the control signal should be selected from the ones from X-COM the out puts of the manual DC circuits with Q4 and Q5, or Q9 and Q10, but it never happens in the normal operation including any menu setting, because it is only for manufacturing use.

(6) OTHER CIRCUITS

IC17 of OR gate IC down in the middle, detects both A and C Low, or both B and D Low, then kills each signal stream. It is countermeasure to cut the small cross talk signal appearing in playback RF at IC34.

CN2 pin 1 input, RECSENS from MCTL board derives from the REC-SAFETY switch. It disables buffers of IC20 with H level. This is to prevent the accidental erasure just in case of microprocessor malfunction.

8.1.4 PV PRE BOARD

Within this board, playback RF signals from rotary trans are amplified and sent out to RF PROCESS BOARD 1 & 2.

There are two head amplifier IC, IC1 and IC2, SSI32R2300. This chip has four channel capability to receive and amplify head signal with differential inputs.

Output can be selected by the combination of logic level at HS0 and HS1 as shown in Fig. 8.1.4.

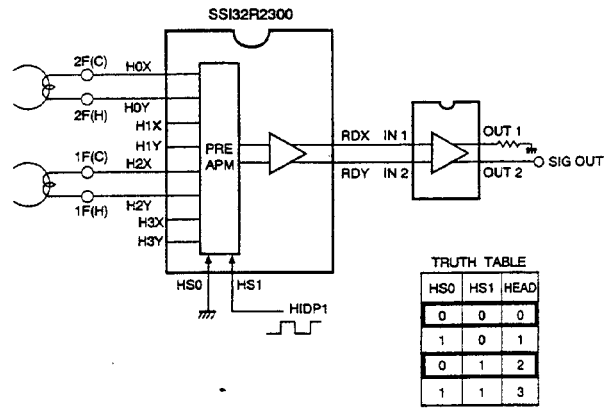

Fig. 8-1-4

IC1 amplifies leading heads signals and two channel signal comes out in series by head switching signal coming from CN1 at pin 2, HIDP1. CS, chip select input is controlled by PRE CTL also coming from RF PROCESS-1, but originally from DCI LSI on PV PROCESS board.

Output signals from IC1 and IC2 are then buffered by IC3 and IC4, uPC1663G, and sent out from CN2.

CN2 wires are separated in 2 and 2 for RF PROCESS-1 and -2 each in 2 pin connectors. CN1 wires just go to RF PROCESS-1 only. These wires directly go to each board to the connectors mounted on top without going through mother boards.

8.1.5 RF PROCESS-1,2

(1) GENERAL SIGNAL FLOW

RF signal from PV PRE-AMP comes in through CN1 on the left top corner of schematic diagram 1/2. Main signal is processed towards right hand side, then EQUALIZER circuit and goes out at the right down side. On the schematic diagram 2/2, processed signal and threshold DC voltages are fed to IC10 on the left top. Output signal from this LSI comes out of the bottom side of this chip, and sent out via buffer to the connector CN2 on the right top corner. Lower half of 2/2 is microprocessor and related devices which does not exist in RF PROCESS-2 board.

(2) RELATION BETWEEN RF PROCESS-1 AND -2 BOARDS.

There are two signals almost simultaneously played back. The signal from leading heads with (+) azimuth and another one from trailing heads with (–) azimuth. Two RF PROCESS boards manage those RF signals processing in the same time. Two boards have the same foil pattern design and almost the same components are mounted for the main signal path. The major difference is microprocessor chip and connector CN5 on top edge. Those are only mounted on RF PROCESS-1 board. Other minor differences are found in the control signal ins and outs, selecting the proper one by putting 0 ohm resistor or 1 M, since pin assignment is identical for both boards.

(3) INPUT PROCESSING

RF signal input from CN1 first goes through Q1 and Q2 in parallel, one of which have gain control VR1. Both are switched in IC1 analog switch with HIDP1, the head switch pulse coming from MCTL via CN2 pin 28A. Obtained signal is series of two different channels with the same azimuth group, but one channel can be controlled in gain, so that signal level difference can be adjusted.

The signal goes through amplifier Q5 and Q6 up to TP1. Then the main stream is fed to IC2 SSI32F8001 at pin 5. This is an electronic filter chip and lowpass output is used, but the purpose is to boost the higher end frequency.

Boost control is done by VBP input by applying DC voltage ATEQ from page 2/2.

Output of IC2 is differential signal, one of which gets delayed by L2 and added to the another with voltage level control by APH voltage from 2/2. This forms phase shift circuit. After Q12, the signal goes through IC3 CLC520, AGC AMP which is controlled by VCG voltage also coming from 2/2.

Output of IC3 comes up to TP6, then goes through FL2 where 21 nsec delay is given and added to the original flow through VR6. The signal goes through IC4, FL3, Q19 and Q21, reaching to TP17 and proceed to next process on 2/2.

(4) DROP OUT DETECTION

A signal flow split from the main stream at TP1 goes through Q14, Q15, Q100, and Q16. Envelop detection is done in this flow and it is fed to IC5 LM360M comparator. The reference voltage is applied through Q18. The outputs are sent to 2/2. Q17 attached to Q18 Base modifies the reference level with the control signal LFIX, which is given from 2/2 microprocessor. It comes out during search and still mode. LFIX is used to modify other conditions in various controls done in 2/2 as well.

(5) ENVELOPE DETECTION

Another splitting flow at TP7, gives envelope detection for both (+) side and (–) side. Different direction of DA2 and C51, C53 makes one way integration to detect envelopes for both. Those go through IC6, appearing at TP14 and TP15, then sent to 2/2. Three threshold levels are obtained in this section, TH0, TH+1 and TH-1. Those are sent to 2/2 as well.

(6) OTHER CIRCUIT ON PAGE 1/2

Back to the input stage at Q6, just before the TP1, there is one more signal flow splitting from Emitter of Q6. It goes to IC1 analog switch C-switch at one input Y1C pin 3. Another input is explained in the next paragraph. The output signal from ZC then goes to A-switch input at Y1A pin 13. .
To another input Y0A, on the other hand, there comes the signal from RF PROCESS-2 board after going through identical path on another board and coming into this board at CN2 pin 25 A. Switching A-switch is done by FR-SEL signal from RF microprocessor on 2/2. Switched output goes through Q4 and sent out at CN2 pin 26B as TR(X). It is going to MCTL/SV board and used for Auto tracking function.

The same signal is utilized for Automatic Recording Current Adjustment when the Service menu is activated. As explained in REC/ITI circuit, count down frequency is recorded during this automatic adjustment mode. Only when 6.2 MHz is used, the RF level needs to have more gain so that output from Q23 which is in the later signal flow is chosen by IC1 C-switch at another input Y0C.

(7) IC10 JCL0027 & PLL CIRCUIT

On the schematic diagram 2/2, main data signal and various threshold voltages coming from 1/2, all go into IC10. The contents of IC10 is described on the BLOCK DIAGRAM of RF PROCESS. Data signal is separated to five and compared to other five threshold levels in five comparators.
Main signal goes through DATA LATCH by CK2 and comes out at pin 22 as DATA OUT, also PB CLOCK at pin 23. Both are buffered with IC12 and IC11 and sent out to CN2 card-edge connector. These go through MOTHER-1 board and MOTHER-2 board, eventually to PV PROCESS board.

Phase detector outputs are at pins 107 through 110, all are added by resistors tied together. It goes through IC13 and controls VCO formed with IC14-3 and C105, C106. Out put clock signal is coming out of IC14-2 and fed back to IC10 at pins 2, 4 and 6 to form the phase locked loop. Locking status is available at pin 26 LOUL1, and there are three ways to go. One of which is to fed back to DO input via D5 in DIODE-OR logic. Another is fed to RF microprocessor at pin 54. Same type of signal from RF PROCESS-2 comes in from CN2 pin 24B and fed at pin 55. The last way is to drive the LED LD1 with Q66.

(8) IC10 & ERROR DET

Out of internal comparators within IC10, error signals are obtained with each threshold levels. Then they are compared depending on the data levels +1, 0, –1, and three types of error voltages pairs are coming out, CTP1, CT0 and CTM1, at pins 9, 10, 12, 13, 14 and 15. Each pairs are added by resistors right at the output of LSI.

Added CT0 output go through IC15 and Q32, then it is sent to 1/2 as AGC signal. Added CTP1 output and CTM1 output once go through voltage follower amplifier IC28.2 & IC28.1 each. Out of these two, both signals are compared in IC28.3 while both signal sum with R273 and R274 is compared to a fixed reference in IC15.2.
Output of IC28.3 goes through IC16 analog switch-B and sent out as APH to 1/2. Another signal output from IC15.2 goes through switch-A and sent out as ATEQ to 1/2.

Another inputs for these analog switches A & B, signals originally from microprocessor is given and switched by LFIX control signal during SEARCH/STILL mode.

At each signal lines of AGC, APH and ATEQ, there are transistors with capacitors hanging down. These are controlled by head switching signal HIDP12. The purpose is as follows. These error signals need to be integrated for smooth control. For example, in AGC line, R232 and C115 or C116 are the time constant for this integration. Since this error signal contains two head channels information alternately, and the time constant needed is longer than this alternating period. Capacitor circuits have to be separated and driven by transistor switches.

(9) IC 17 uPD78054GC-301, RF MICROPROCESSOR

This chip has inputs with A/D converter installed inside, P10 through P14. Control voltages such as APH and ATEQ for this board and for RF PROCESS-2 board coming via CN2 are given to these input ports.

SI0, SO0 and SCK0 are connected to SYSCON/TC via CN2, Mother-1 and Mother-2 for communication with system control microprocessor.

SO1, SCK1 and P23 are used for sending out analog signal data in serial digital to IC31 M62352, 12 channel D/A converter with serial to parallel interface. This is used to generate control signals of APH and ATEQ for SEARCH/STILL mode. For example, analog output from IC31 at pins 4 and 5 are sent to IC16 analog switch-C. Switching signal is HIDP12 and it generates the control signal having two levels alternating in head switching period at ZC output. It is fed to another input of switch-B as described earlier.

The rest of D/A converter outputs are for control signals for REC/ITI, such as FDC, PDC, FCAL1 and FCAL2. RCAL1 and RCAL2 are given by microprocessor directly from analog out port with D/A converter mounted inside.

(10) OTHER CIRCUITS

SBE1 or SBE2, sync block error signals from PV PROCESS board is coming in from 11A or 10B of CN2. On RF PROCESS-1 board, SBE1 is selected by resistor value of R248. Original SBE signal have sync block pulse width even without error, and pulse becomes wider by error counting within the sync block. IC32 AND gate block eliminate this single sync block width pulse. IC33 D-FLIP FLOP forms one shot multi-vibrator to secure the enough pulse width for counting visually or by counter.

8.1.6 OUT MEM PWB

(1) GENERAL SIGNAL FLOW

Within this board, PB or EE video signal, Y and C multiplexed from the bus, is de-multiplexed and D/A converted to component signal. Also timing control for frame synchronizing is done based on the timing signals from OUT GEN board.

(2) INPUT SECTION ; IC7 JCL0025

Signal comes in from CN2 at pins 37A through 44B, 8 bit parallel digital video data with Y/C multiplexed. Each bits are driven in differential pairs, those are first go through buffer chips, IC4 and IC5, DS90C032TM, then come in to IC7 JCL0025. As this data stream has chance to be PB or EE; 27 MHz, H and F clock signals coming from both PB and EE are fed to this LSI. PB clocks come from PV PROCESS board while EE clocks come either from ANA IN or DIG I/O in the same bus, and disabling one of two at each board by L-DIN signal coming from SYSCON board. It is the same method as selecting EE parallel digital video signal to the bus from ANA IN or DIG I/O.

Within IC7, the selection of PB or EE is done by RSEL at pin 66 which is fed to CN2 13B originally as L:EE. The data is demultiplexed to separate Y and C(Cr, Cb alternating) then sent to the next LSI.

(3) FRAME SYNCHRONIZER IC39 JCL0034

This section consists with two pairs of memory IC's, total 4 same chips IC40 through IC43, CXK48324Q. This memory IC is accessed by applying bit clock, HCLR and VCLR, instead of address bus. IN port and OUT port are independent, so that reading is possible while writing.
Output data timing is based on REF clock signals from OUT GEN board, so that frame synchronization is done.

There are four ports of output from this chip as follows.

MPDOn: Y and C once again multiplexed and sent to DIG I/O for digital video signal out. This signal is buffered by IC44 and IC45, then sent out from CN1 to DIG I/O board via mother board.
CPSCn: C output for composite output. The timing of this data is 2 lines earlier than Y to cancel the delay occurring at encoding.
CPNCn: C output for component output.
CPNYn: Y output for component and composite output.

(4) D/A CONVERTER

CPNYn signal is D/A converted by IC32, CX1171M, then goes through trap circuit and sent out to CN2 26B. L1 and C217 values are tuned for 13.5 MHz.

CPNCn signal is divided to B-Y and R-Y with IC33 and IC34, 74ACT574 Octal D-type FlipFlop, by applying complementary clock signals to each chips. These clock signals are originated from S135CK2 (13.5 MHz) coming in from OUT GEN board, but gated by CPNBR flag which alters by Cr and Cb timing, consequently 6.75 MHz.
Divided B-Y and R-Y are fed to IC35 dual 8 bit D/A converter. Analog output of each B-Y and R-Y go through trap circuit and sent out to CN2 at pins 28B and 27A. Traps in these circuits are tuned to 6.75 MHz.

CPSCn signal goes through the same construction circuits as CPNCn and sent out at pins 31A and 30B.

(5) MICROPROCESSOR IC11 uPD78054-XXX

Microprocessor manages the control of IC39 LSI and interface with PV PROCESS board. It receives independent commands such as FRP, FREEZE and NTSC, as well as commands through serial communication from PV PROCESS coming in at 11A, 11B and 12A of CN2. It controls IC39 through serial port MODED, MODECK, MODELD and MODEEN, at pins 17 through 20. Also status controls are sent such as NTSCL, FRZE, FRMH etc.

VIDEO PHASE control coming through CN2 at 40B is originally from the front panel VR sending analog voltage. It is received at the A/D port with A/D converter built-in. As the nature of A/D conversion, it occurs the chattering at the threshold level of each digitizing step. Output from pin 5 generates D/A converted analog output to mix to the original voltage to avoid this chattering by giving hysteresis characteristic.

Other TBC controls from Rear panel connector, such as Y level and C level are processed in analog circuits, IC15, IC16 and IC19. Adjustment signals CPNYADJ, CPSCADJ and CPNCADJ controls output signal levels by modifying ref voltages at D/A converters.

8.1.7 OUT ENCODER PWB

(1) GENERAL FLOW

In this board, there are mainly two functions, component signal processing and color encoding for composite and Y/C signal. For component signal, adjustment circuits of frequency response and delay.
Composite signal encoding includes SC generator with Genlock circuit.

(2) COMPONENT SIGNAL PATH

Y signal coming in from CN2 26B goes through LPF, EQ and Frequency response adjustment circuit with IC1 and goes out at CN2 at 34B. TBC R-Y signal comes in from CN2 27A, going through the similar circuit as Y, and goes to IC8 TK16031 voltage control delay line. Delay can be adjusted by control voltage from VR5. IC10 buffer amplifier with analog switch is used for component level selection for MII or BetaCam. Output signal then goes through IC7 and it is sent out at CN2 35A. TBC B-Y signal is processed in the same way through the circuit of same construction. The output is sent out at CN2 36B. See the block diagram of simplified flow.

(3) COMPOSITE SIGNAL PATH

ENC R-Y signal comes in from CN2 at 30B. It goes through the similar circuit as TBC R-Y up to Q20. Level adjustment and Delay adjustment are the same way. There is a switch S1.1 to kill the signal. This is for Delay adjustment of B-Y signal. Encoded signal contains both R-Y and B-Y signal and it is difficult to adjust R-Y or B-Y respectively by viewing the encoded color signal. S1.1 or S1.2 in the B-Y circuit are used to kill the other part of color while Y/C adjustment.

After Q20 there is Feed back Clamp adjustment circuit consisted with IC21, IC22, IC23 and Q21. Output of IC21 at pin 1 goes through another amplifier and fed to analog switch IC22 TC4W53. This switch control is driven by clamp pulse generated in OUT GEN board. The switch out pin 1 only makes contact with signal when CP is High. This voltage is memorized in C83 capacitor and go to the voltage follower amplifier in IC23.
This voltage is then compared with fixed DC level with VR11 R-Y Balance. The error voltage, out put of comparator is then fed back to the input of IC 21 amplifier to stabilize the DC level of signal.

ENC B-Y signal is processed in the same way. Location of Y/C delay VR is found in different place, however, it is related with non use circuit existed when development, but functionally it is same.

(4) ENCODER BLOCK

Both R-Y and B-Y signals after clamping circuit are fed to IC 301 and IC 302 NJM1486M. Both signals are modulated with applied SC signal and outputs are mixed, then goes through Q301 and Q302. Burst signal is added at this point, and it goes through BPF and IC 307, finally it is sent out at 38B of CN2.

(5) SC GENERATOR BLOCK

There are two generator blocks, one for Burst signal and another for color signal. The latter is controlled to lock to the former.

X602 is VCO of 4 fsc controlled by the voltage from IC322. IC 324, TC74HVC163 binary counter counts down this 4 fsc clock.
OD output 1/16 frequency is compared to 1/4SC from OUT GEN board. IC 321 TC74VHC86F is used as phase comparator at pins 10, 9 and 8. Phase error pulse is integrated to DC voltage with IC 322 left half and applied to the right half to be compared to the voltage SCPHS coming from the SC phase control VR. The output of this comparator is applied to the VCO. This is the loop of Burst SC circuit.

The output of the counter IC324 at OB (1/4) goes in to IC325 TC74VHC164 shift register and QB output is used as Burst signal. This shift phase circuit is actually not necessary for NTSC, but the structure is prepared for the use of PAL model which requires alternating shift of burst phase.
The output of the shift register is buffered in IC319 and go to the modulation chip IC334 where burst flag is applied from OUT GEN board. Output O+ at pin 6 is then goes through level adjustment circuit and finally joins to the color signal path.

X601 is VCO for color signal SC. The loop is almost same, but OC (1/8) output of IC324 is compared as the reference so that the color signal SC is locked to burst phase. The output of this block is obtained from shift register IC316, which delivers two phase shifted SC's for R-Y and B-Y. These are buffered in IC319 and applied to the color processing circuit.

8.1.8 OUT GENERATOR BOARD

(1) GENERAL DESCRIPTION

Within this board, there are mainly two functions. The first one is to generate reference sync signals and related timing pulses for analog output signals. These sync signals are sent and used in OUT MEM and OUT ENC.
Another function is final processing for all the analog video outputs; Component, Y/C, line (composite) and Monitor out (composite with on screen).

(2) REF SYNC INPUT

Reference sync signal from REAR PANEL comes in through CN2 at 18B to this board, and received in Q1 circuit first. Out of Q1 Emitter, it goes through Limiter circuit with D1, Q10, Q11, then to IC6, EL4583CS the sync separator chip to extract Composite sync, V-sync, BP burst pulse, HD and No sync detect signal at pin 10 which goes H when NO SYNC.

Main flow of Reference signal after Q1 goes through Q2, LPF, Q3, Q4, IC1. Out of first amplifier of IC1, Q5 FET is acting as Burst Gate circuit to extract only the burst signal. Burst signal goes through Color Detection circuit consisted with Q6, Q7, Q8 and IC2. Output of IC2 goes Low when color is detected. This signal is fed to Negative-In And gate with No Sync signal. The output of this gate goes High only when both are Low. This output is used as INT/EXT control signal in various places within this board as well as it is sent out to SYSCON board.
This signal also drives Q9 to draw the LED current if external TBC controller is connected in the Rear Panel.

A part of the Burst signal separated at TP1 Burst Gate circuit, is one again go through another amplifier of IC1 and fed to IC16.

(3) SC PLL CIRCUIT CXD1216 & CXD1217

The circuit block is consisted with IC16, IC17, X1 and IC18. IC16 has phase comparator for HD and SC and it outputs phase error. The error signal is integrated and fed to X1 VCO of 4fsc. When REF is detected, the error output of SC phase comparator is chosen for control. HD comparator out put is used when INT. SC output of IC18 is counted down to 1/4 and sent to OUT ENC board.

(4) CLOCK AND PULSE GENERATOR uPC2384 & JCL0024

This block is consisted mainly with IC309 and IC315. This combination is same as the one in ANALOG IN board, but the master clock for JCL0024 is 27 MHz on this OUT GEN board. IC315 generates and sends out various sync pluses such as, REF-H, REF-F, REF-HD, REF-VD etc. It also sends REF SYNC back to SC PLL circuit as INT reference signal at IC22 dual 4 ch multiplexer.

The feed back signal is REF-H which first goes through V-DL circuit with IC304 TC74VHC123, and it is fed to IC309 at phase comparator. The another comparator input is HD from IC6 sync separator of INPUT REF. The output of the comparator once goes out of this chip and applied again to VCO control input. IC 309 sends out 18 MHz and 27 MHz, and 27 MHz is fed to IC315 as the master clock.

(5) SYSTEM PHASE, SET UP LEVEL & SYNC PULSE

The voltage of System Phase VR comes from front panel at CN2 40B. It first goes through IC301 amplifier to change the level, then applied to the comparator with REF HD feed back loop.

Set Up level control voltage from TBC remote in REAR panel comes in from CN2 at 16B. The level change is done in IC301 first then it is fed to IC311 as voltage control input of GCA. The input of this GCA is from IC310, but originally SET UP pulse from IC315. The another channel of GCA in the same chip is driven by the opposite logic level of the SET UP pulse. Added output of these two GCA enables the SET UP range from below pedestal to the maximum. This output is sent to signal processing block and combined with each signal lines.

Sync signal is processed in the circuit block of Q306, Q307, Q308 and IC312. Original signal is DSYNC from IC315.
Out of the IC315, there are resistors and a capacitor until it reaches to the buffer IC17. It is to compensate the very slight timing difference with Burst signal. It is then sent to the circuit block.

Besides this external delay circuit, JCL0024 has a function to delay DSYNC and DBF relatively to the video signal by selecting the pins DSEL1, DSEL2 and DSEL3. Those pins are connected to the rotary digital switch S301. The delay can be adjusted in 54 MHz bit rate step. It is to compensate the slight timing difference between the actual analog video timing and digital video timing.

Q306 is level adjustment circuit, then the signal goes through LPF and separates to Q307 and Q308. Both signals are selected in IC312 at channel-Z depending on the control input at C, where L:Type-L signal is coming. It is to select 300 mV or 286 mV depending on the component signal format. Z output is sent to component signal circuit.
For composite, Q308 signal just goes through Y-channel and Y output is sent to the composite Y signal path.

(6) R-Y & B-Y

Analog output signal paths are shown on the third page of schematic diagram.

R-Y signal is coming in from CN2 35A, goes through Q606, IC608, Q608, Q609, Q610 and sent out at 30B to the BNC connector in the REAR panel. At the output, a part of the signal is sent back to IC606 analog switch and sampled with CP OUT pulse timing. The level is temporarily held in C623 and integrated with IC607. The output voltage via Q607 is applied to the main path at IC608 input.

B-Y signal is processed in the same way.

(7) COMPONENT Y OUT

Y signal coming in from CN2 34B separates in three ways, COMPONENT, Y/C, and COMPOSITE.

COMPONENT Y path starts after Q625 then adjustment circuit, Q626, goes through IC623 Type-L level selector, Q616, IC619, Q618, Q619, Q620 and sent out at CN2 29A to the REAR panel. Sync signal is added at Base of Q619 via Q652 driven by CPN SYNC signal coming from pulse generator block on the second page. Set up pulse is given also from pulse generator block, and it drives Q651 and modify the reference level of IC619.

Clamping circuit is formed in the same way as R-Y or B-Y. Output signal is sampled by IC617, integrated by IC618 and after Q617 the voltage is added to the main path.

(8) Y SIGNAL OF Y/C OUT

The path starts after Q623, level adjustment, Q624, then it goes up to Q611, through IC614, Q613, Q614, Q615 and sent out at CN2 27A to the REAR panel. Sync is added by Q650, and Set up is given via Q649. Clamping circuit is the same style, IC612, IC613 and Q612.

(9) COMPOSITE SIGNAL

It starts from Q621 and level adjustment circuit follows, then goes through Q622, Q627, where C signal is added with Q628 and C level adjustment. It goes through Q629, Q630, IC627 and Q632. This is the point not only where Sync signal is added via Q654, but also the path separates in two. Q635 and Q636 drives the LINE-1 output, Q633 and Q634 for LINE-2 output. Set up signal is added via Q653. Clamping circuit is the same style using IC625, IC626 and Q631.

(10) C SIGNAL

It is coming from CN2 38B, then goes through Q637, Q638, Q639, IC631, Q640, Q641, Q642 and sent out at CN2 28B. The circuit consisted by Q643 and Q644 is to add DC offset to the entire C signal. It is the ID for wide aspect video signal.

(11) MONITOR OUT

Monitor out composite signal is divided from LINE-1 at Q635 and goes through Q646, IC634, Q647, Q648 and sent out at CN2 32B to be sent to the REAR panel connector.
On screen character is added here. VOC pulse gives white level at the character position. VOB pulse is almost the same timing as VOC but have wider width both in rising and falling. When VOB pulse comes, the analog switch of IC634 flips to the VOC signal and pass the VOC signal. When VOB is low, the switch turn back to the video.

The white character with thin black border is superimposed on the video signal in this way.

L/WARNING signal is to draw the VOB pulse via D602. This is to kill the on-screen character when the machine gets in Auto off mode. Warning message is generated and added to the video in OUT MEM board in this case, and it appears all the output signals.

8.1.9 DIGITAL I/O BOARD

(1) GENERAL SIGNAL FLOW

This board handles serial data both for video and audio.
Video; SMPTE 259M SDI component video signal
Audio; AES/EBU digital audio signal

INPUT

SDI digital signal, fed from the BNC connector, comes in through a special coaxial connector CN3 mounted near the top edge of the board.
Then the signal is processed to the form of parallel digital data which flows out through the card edge connector CN1 as the recording signal source.

AES/EBU digital audio signal, on the other hand, comes in through CN201 in the same manner, and then converted to the different format, but still in serial, then divided to two channel signal lines and flow out through CN2.

OUTPUT

Play back or EE video signal comes through CN1 then goes out from CN4 after converted to the form of SDI serial digital format.
Play back or EE audio signal also comes through CN2 and goes out from CN202 after being converted to AES/EBU format.

(2) INCOMING SECTION OF VIDEO RECORDING BLOCK

The first stage is conformed with three IC chips IC1 GS9005A, IC2 GS9000 and IC3 GS9010A. This group of IC's converts SDI signal into parallel digital by using the PLL function. See the block diagram for the inside block of these IC's.

SDI signal comes in from pin 8 of IC1, going through the CABLE EQUALIZER block in order to eliminate jittering and DC fluctuation occurring through the cable transmission.
Main data stream goes through the Latch and stable signal appears at pins 24 and 25.
Other path is to extract the clock signal which is done with VCO and Phase comparator inside this chip and comes out of pins 22 and 23.
Data and Clock are now fed to the second chip IC2 and goes through the Descrambler and decoded to the parallel format, while PCLK of 27MHz comes out of pin16. Then those are fed to the second stage. Back to the first stage, there are a few explanation of the chipset.

CARDET carrier detection out from IC1 stays normally L when it receive a serial data correctly. If the signal is interrupted for a certain period of time, this lines goes H and trigger the VCO sweep function in the IC3. The DC voltage coming out of pin2 of IC3 start changing as saw tooth wave. IC1 receiving this voltage at pin 17, R3, it scan the frequency of the VCO trying to catch a hold of the incoming serial data.

Once after the serial data stream is locked, then HSYNC with square wave comes out of IC2 and comes to IC3 at pin 13. It stops the voltage sweeping and the frequency stays at this point.

The HSYNC signal comes out when the TRS, timing reference signal, is detected from the data stream within IC3. The rate of HSYNC is equal to horizontal scan rate in case of component signal while it is half the horizontal in case of composite signal.

Even after the PLL frequency stays, automatic fine tuning system which formed by Loop Filter out put of IC1 pin12 "LF", applying to IC2 at pin 5, works to center the VCO via "OUT" pin 2 of IC2 to R3 in IC1.

"SWF", Sync Warning Flag, pin 3 out of IC2 becomes active H when it detect the higher error rate than predetermined level by "SWFC" pin 15 with RC constant connected outside. This signal controls IC3 at pin 8, gating the HSYNC within the IC3. The purpose of this line is to stabilize the detection performance from the disturbances such as noise from outside or at power on.

f/2 out put at pin 6 of IC3, it is L when detecting component and H when composite. This controls f/2 input of IC1 at pin10 to enable the VCO frequency at 540 MHz, twice the normal rate of 270 MHz, for optimizing the jitter.

(3) JCL0032 PROCESS IN VIDEO RECORDING BLOCK

The parallel data stream coming in from pins 45 through 52 of IC5, goes through TRS decoder where the TRS signals are separated. Out of TRS signal, DIF and DIH signals are obtained and sent out from pins 15 and 13. DIH goes low during the active horizontal period. DIF goes low during active first field duration. Those signals goes through buffers and being sent out to mother board together with main data stream, the final destination is PV PROCESS circuit.

Main data stream goes through clock buffer to be stabilized more accurately with re-generated 27 MHz by IC4 which is applied through pin 24 SYSCK. Then the multiplexer sends out two digital data streams. The main stream with Y and C signal multiplexed, and the onother stream with only Y information for detecting the VITC.

Besides main signal processing, Timing Generator generates HD and VD signals sending out at pins 97 and 96.
Also Error Detector block sends out ERROR at pin 95, LOCKH at pin 85, LSTD at pin 17.

LOCKH, stays H normally as long as line standard detection is correctly done. LSTD, Line Standard detection flag indicates the incoming SDI video system whether it is 525 or 625.

(4) OUT PUT SECTION OF RECORDING BLOCK

Sub data stream for VITC coming out of IC5 pins 149 through 156, is instantly D/A converted with IC8 to get analog Y signal. It is sent to SYSCON to separate the VITC information later.

Main data stream goes to the line buffers, IC11 through IC14 via a small gate array IC26. This IC simply blank the signal appearing at H-BLANKING area when Y/C delay is offset during adjustment. The line buffers provides two streams, VREC* and VPB/EE*. Those data are sent out to the Mother Board-1 through CN1 where to meet the same data bus running from other circuit boards.

Pins 12 of these buffers are used to avoid conflict with other signals at Mother Board-1 by keeping output in high impedance when the EN2 control signal is H.

(5) OTHER SIGNALS IN VIDEO RECORDING BLOCK

HSYNC coming out of IC2 is not only used in IC3, but also used to detect the status of SDI signal presence, L:NO_DIN. IC17 monostable multivibrator is kept re-triggered by HSYNC as long as it is active, and Q pin13 keeps H. It goes L when HSYNC stops coming.
In addition to this, ERROR, LOCKH, LSTD and ILLEGAL_STD, total 5 bit of the status information is fed to the shift register drawn in the playback block of schematic diagram.

(6) VIDEO PLAYBACK BLOCK

Play back signal data stream is given from mother board via card edge connector CN1. Playback clock 27 MHz is also given from CN1. It is originally from OUT GEN BOARD. Both data and clock goes through the buffers IC18, IC19 and IC20, and goes in to IC21 JCL0031. See the block diagram for inside process. Parallel digital data stream goes through Delay Buffer which is controlled by 5 digit control data given from OUT MEM circuit. Then the TRS ID is added to the main data and coming out of pins 45 through 52.

IC22 GS9002 is converting parallel data to the SMPTE 259M serial digital data. Within this IC, the 27MHz clock is divided to 270MHz clock, and used for serial conversion. Serial data comes out from pins 38 and 39 after going through the SCRAMBLER.

IC23 GS9007 is line buffer sending out the final serial data out from pin 1, then to the special connector CN4.

(7) OTHER CIRCUIT IN VIDEO PLAYBACK BLOCK

IC21 status information ERROR, LSTD and LOCKH are sent out to PV PROCESS BOARD together with status given from recording block, ERROR, LOCKH, LSTD, ILLEGAL_STD and NO_DIN. These status of 8 bit data are fed to IC24 TC74HC165 in parallel, and sent out in serial data from pin 9, by the clock and S/P signal coming from PV PROCESS.

(8) AUDIO RECORDING BLOCK

AES/EBU incoming signal comes in from the special connector CN202. It goes through IC202 MC34050 EIA422/423 Transceiver, dual transmitter buffers and receiver buffers. The signal goes to IC201 at pin 37. YM3436D is AES/EBU DECODER chip. See the block diagram for inside block. AES/EBU decoding block with PLL converts the data to the pure serial digital audio signal at pin 3.

MCA, master clock of 256 fs comes out of pin 10. Other pulses are generated counting down MCA within Timing generator. MCC, bit clock of 64 fs at pin 7. WC, word clock of fs at pin 8. OPT, fs frequency but different phase from WC at pin 5.

CDO, CCK, CLD; These are a set of serial port to sends out information obtained inside the chip, such as PLL lock status, parity check status, Channel Status 31 bits data, users bits, and so on. These lines are connected via mother board to microprocessor in DIG AUDIO board. CDO is the serial data line out, while CCK is given clock and CLD is given timing signal both from the microprocessor.

The main stream coming out of DOUT pin, now goes through a gate IC206.4, a simple NAND gate. At the another input of this NAND gate, there are group of NAND gates and INVERTERs. These can be expressed just to one EXCLUSIVE OR gate having two inputs connected to WC and OPT. The purpose of this gating is to extract only 16 bits, masking lower 8 bits out of the original 24 bits data stream.
The out put of the inverter now goes into IC205 TC74HC4053, triple analog switches. The signal is connected to 0X and 1Y, leaving other inputs to GND. Switching signal is from WC and it selects XCOM and YCOM in the same time. The simple data stream is now divided to two channel streams in this way, and are sent out to the PV PROCESS board after buffered by IC208. WC is buffered and sent out as DAI LRCK together, as well as MC is sent out as DAI MCK.

Out of the main stream before separation, another line goes through buffer IC211.1 and sent out from CN2, but the destination is DIGITAL AUDIO. It is used as EE sound source.

(9) PLAYBACK BLOCK OF DIGITAL AUDIO

Playback digital data is coming from CN2 as DAO DAT fed to IC204 at pin 7. YM3437C is AES/EBU signal modulator. The main data is converted to AES/EBU form within this chip, on the other hand, other information coming through CLD, CIN and CCK are also converted to the AES/EBU form and multiplexed with the main data line. Finally it goes through Bi-phase modulator and coming out at pin 16, then buffer of IC202, transmit driver IC212 and connector CN202.

8.2 AUDIO CIRCUIT

8.2.1 AUDIO I/O PWB

(1) GENERAL DESCRIPTION

In this board, it interfaces all the analog audio inputs and outputs between each connectors and DIG AUD board. Also it sends audio rec signals to ANA AUD board for recording the Search audio signal.

(2) INPUT CIRCUIT BLOCK (SCHEMATIC DIAGRAM 1/2)

Analog audio input signals from XLR connectors in the rear panel comes in to this board via REAR-2, REAR-1 and MOTHER-1 board. Input signals of CH-1 and CH-2 come through CN4 at pins 31A,31B,32A and 32B,33A,33B for each channels. CH-1 signal goes through IC1 and IC2 where balanced signal is converted and fed to IC7 after IC5.
IC7 is the voltage control amplifier which is controlled by the DC voltage applied to pin 2. This control voltage is sent from DIG AUDIO board. CH-2 signal is processed in the same way. The final outputs are sent out to DIG AUDIO board.

(3) OUTPUT CIRCUIT BLOCK (SCHEMATIC DIAGRAM 2/2)

Play back or E-E signals are returned from DIG AUD board in analog signal form. Those come through CN4 at 17A and 19A for CH-1 and CH-2 respectively.

CH-1 signal comes in IC101 voltage control amplifier which is controlled by the analog voltage from DIG AUD board. Output of IC101 splits in three ways. One for Search audio, another for Monitor Output and the main path.

Main signal flow then goes through IC103, IC105 and go through the circuit block with IC107, IC109 and several transistors to be buffered and driven to the balanced signal and sent out from CN4 at 27A and 27B to the REAR board. Main flow of CH-2 is processed in the same way.

CH-1 signal split at IC101 for Search audio is buffered in IC105 and sent out to ANA IN board through CN4 20B via MOTHER-1, MOTHER-2. Same flow of CH-2 is also sent.

CH-1 signal for Monitor out is fed to IC13 and IC16 at one channel input. CH-2 signal is split in the same way and applied to these IC's at another channel input. These IC's are switch OP amp and each outputs are driven in IC17 and sent out to Head Phone Jack via MOTHER-1, MOTHER-2, OPERATION board. Switch inputs are controlled by Q117 and Q118 driven by MSEL1 and MSEL2 control signals. Those are from DIG AUD board microprocessor.

Another flow of outputs from IC13 and IC16 are mixed together and driven by IC23. It is sent out as Monitor output to the Rear panel in RCA unbalanced connector via CN4 26A.

8.2.2 DIGITAL AUDIO PWB

(1) GENERAL DESCRIPTION

There are three pages of schematic diagram for this board.
Page one shows A/D and D/A block for both recording and playbacksignals.
Page two shows microprocessor and surrounding circuits which controls various activities within the board and interface with outside of the board.
Page three has digital audio processing LSI with Memory chip to manage the signal processing for both recording and playback.

(2) RECORDING SIGNAL PATH

Signals for recording come into this board through CN2 pin 31A and 32B from AUDIO I/O PWB. These are analog signals for CH-1 and CH-2 each. As digital audio input is processed in DIGITAL I/O and sent to PV PROCESS directly, this board handles only analog input signal.
CH-1 signal from CN2 is amplified and buffered through IC103, IC105 and IC107 then fed to differential input of IC102, AK5340. This is dual input A/D converter to output serial data. CH-2 signal is amplified in the similar circuit and also fed to this IC. Master clock for this chip is given at pin 20, "AI-MCK", originally from PV-PROCESS board.

Serial data output of this IC102 goes to the select switch circuit on page 3/3. The circuit block is consisted with four analog switches from IC38 and IC39. This block is explained later. Recording signal comes in to X-COM of IC39 which selects two ways of output. Normally 0X is selected, and this line is connected to another 0X of IC38. This switch is controlled by input select switch ANA/DIG. The signal then comes to 0Y and goes out at Y-COM of IC38 if selected.

The signal coming out of switch circuit block is fed to DI3 input of IC37, uPD6383, Digital Signal Processing chip.
This chip manage mode control, cross fading of the data, delay, channel re-assignment, muting etc by using IC40, HM514260, 4M DRAM.

Output recording signal is separated in two lines DO1 and DO2 and sent out to PV PROCESS board through CN2 at pins 4B and 5A.

(3) PLAY BACK SIGNAL PATH

Playback signals come in through CN2 16B and 17A from PV PROCESS board. These lines go through buffer of IC32 then go through IC34, uPD4201, FIFO chip to eliminate playback jitter, then fed to IC37, DSP chip.
The output of this IC comes out at DO3, buffered by IC44, then fed to switch circuit block at 0Y of IC39.
The output of Y-COM is sent to IC2 on page 1/3.
IC2 PCM1710 is D/A converter chip to output two lines for CH-1 and CH-2. Those analog outputs are amplified through IC7 and IC8 and sent out to AUDIO I/O board through CN2.

(4) SWITCH BLOCK ON PAGE 3/3

As mentioned earlier, four analog switches forms a block of switching circuit.
See Fig 8.2.2 for easier understanding of the function.
Analog switches (a) and (b) are used for through test by diagnostic program. Switch (c) selects Digital In or Analog In depending on the front switch setting, but Digital In signal selected here is only used for E-E source.
Switch (d) selects Search Audio playback signal from ANALOG AUDIO PWB by SER-H command which is activated only during the search speed playback mode.

(5) SEARCH AUDIO PLAYBACK SIGNAL

It is given from ANA AUDIO board in analog signal coming in through CN2 28B and 29A, showing on page 1/3.
These lines are amplified and A/D converted by IC10, the same type as used in analog in signal. Converted signal is sent to the switch block to be selected during search mode and the signal is processed in E-E path, to be output for both analog and digital output circuit.

(6) MICROPROCESSOR (PAGE 2/3)

IC21 is the microprocessor chip. It controls mode for signal ins and outs, timing of mode transition, DSP control, DIG I/O IC control, A/D and D/A IC control, self diagnostic function etc. The circuit block on the top of schematic diagram is to be used in automatic adjustment mode, taking the analog test signal played back after recording the test signal generated internally, processing them to extract frequency and level information in DC level. These signals are taken within this microprocessor for calculation.
Below the microprocessor, IC23 and IC501 are D/A converter generating the adjustment DC voltage by the command from IC21.

(7) OTHER CIRCUIT OF PAGE 3/3

Top right side, there is a block formed mainly by IC15 and IC16. It is LR signal shifting circuit to adjust a slight timing difference between data line and LR signal occurring in DSP chip.

In the bottom, PLL circuit of generating master clock for DSP. X2 is VCOX with 24.5 MHz, 512 fs. IC48 is the phase comparator to compare the phase in counted down frequency by IC46 and IC47. IC48 contains VCO, but it is not used due to the performance.

In the right down side, data and clocks are separated from the main stream. One for DIGITAL I/O board, going out at CN2 31A through 32B, and another for level meter on the front panel which come out at CN1 41A through 43B.

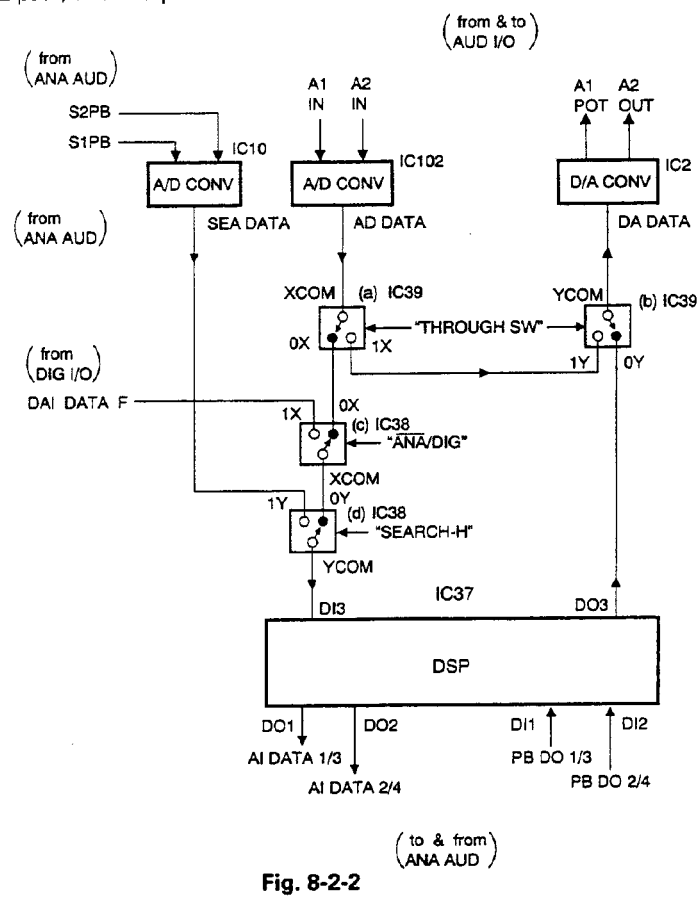

Fig. 8-2-2

8.2.3 ANALOG AUDIO PWB

(1) RECORDING SIGNAL PATH

The first page of schematic diagram is showing main signal flow for recording and playback. Recording signals come in from multi pin connector CN1 at pins 29A through 30B. These are from AUDIO I/O PWB.

There are two similar circuits for CH-1 and CH-2. CH-1 recording signal comes in to IC1 at pin 11 via C401 and R401. It is first selected with internal switch and amplified, coming out at pin 14, fed again to the same IC at pin 16, coming out at pin 17 and it goes through LPF FL1.

ALC works using the signal coming back from pin 15. Out of the FL1, the signal once amplified by IC5, the recording signal is fed again to the IC1 at pin 20.

Finally the signal goes through internal recording amplifier and sent out from pin 32, joined with bias signal and sent to A/C HEAD PWB where it is connected to the head. The other side of the head is connected to IC1 at pin 4 via C3 and this line is selected to Ground during the record mode.

(2) PLAYBACK SIGNAL PATH

During the playback mode, pin 4 becomes the playback signal input while the other end of the head is selected to ground within IC1.

The signal is amplified and coming out at pin 8, amplified more by IC3, fed again to IC1 at pin 9 where the switch selects playback signal from this pin during the playback mode. The signal travels the same path as recording mode up to IC5, but the output signal is rather sent out via CN1 33A to DIGITAL AUDIO PWB.
During the E-E or Recording mode, the signal is also sent to DIGITAL AUDIO, but it is not used. There is no E-E signal available for ANALOG AUDIO, in other words.

There are two ways of muting circuits at the end of playback signal line. The one consisted with Q17 and Q19 is just to kill the signal when needed, for example mode change timing. The other with Q13 and Q15 is just to reduce the high frequency via C57. It is to suppress the bias signal component played back in audible high frequency during slow speed. The explanation is omitted for CH-2 as it is the same as CH-1.

(3) CONTROL SIGNALS

At the bottom side of the first page of schematic diagram, there are IC7, IC8 and transistors. These IC are shift register with latch to decode the control signals to parallel from the serial command sent from DIGITAL AUDIO PWB via CN1 pins 13B through 15B.

(4) BIAS OSCILLATION BLOCK

The second page of the schematic diagram is to show the bias signal circuit.
IC31 and surrounding components oscillates original 70 KHz signal. This output is buffered in two ways by two amplifier elements of IC32.

One output at pin 1 is used for bias signal. It is separated for each CHANNELs, CH-1 bias signal is amplified by the block of Q31, Q319, Q35 and T1. The signal is controlled by Q59 with the control signal from page 1/2. There is CH-2 block on the right with the same structure.
Another output at pin 7 of IC32 is for erase head signal. It is also split in two to serve two channels. CH-1 signal is buffered through Q39, Q41 etc to be output at TP35 and sent out at CN31 which going to the A/C HEAD PWB. Q37 is to control the signal by A1ERSCTL to give the smooth rising and decaying control of the signal.

Block of Q51, Q53, Q55, and Q57 is to control the erase function by shorting another end of the head to ground by the control signal A1ERSSW.

8.3 CONTROL SYSTEM

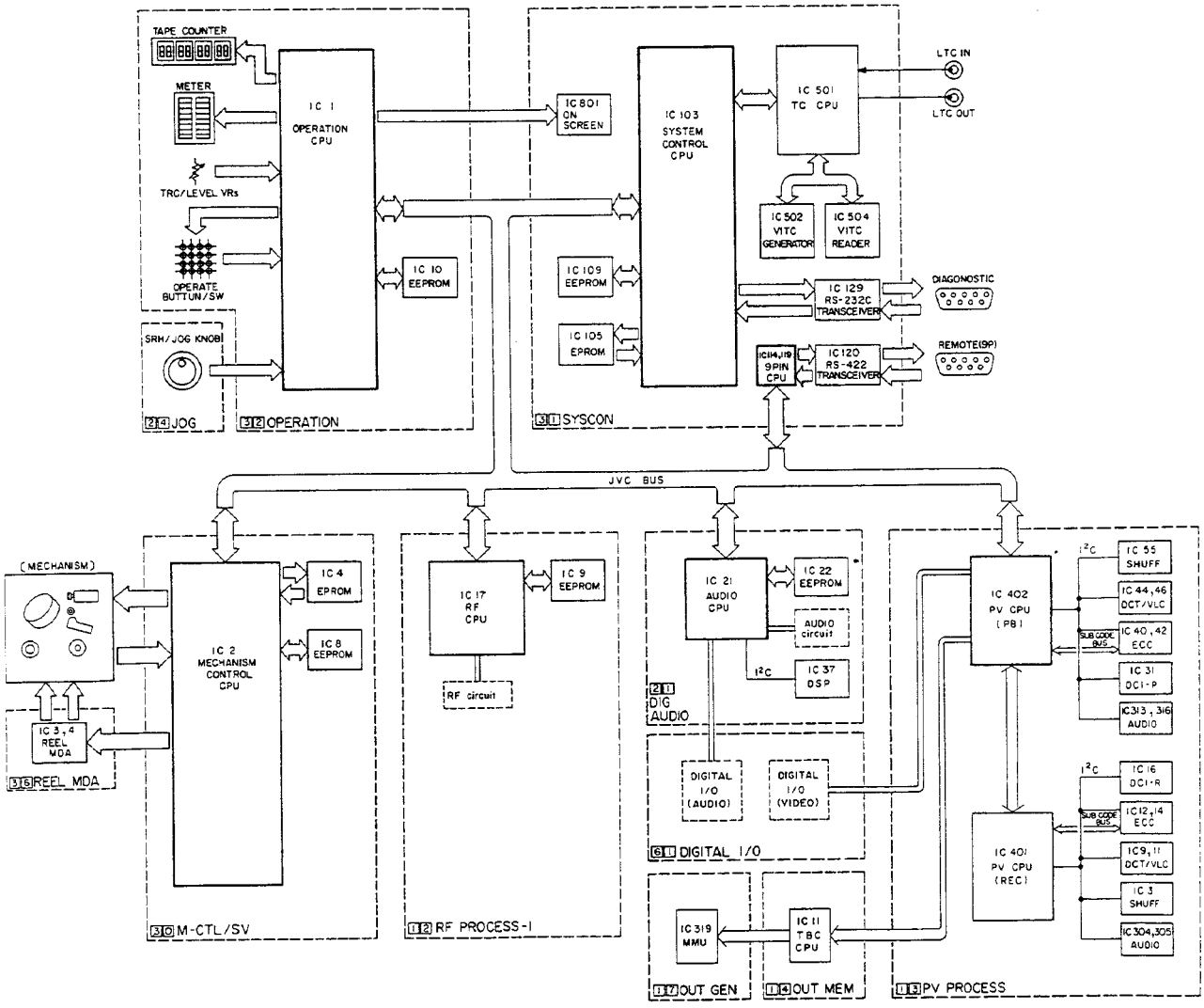

Fig. 8-3-1 Control system block diagram

8.3.1 OUTLINE OF THE SYSTEM CONFIGURATION

Fig. 8.3.1. shows the system configuration inside the unit. Each CPU in the figure communicates with each of the others via the JVC bus. As in the 22 series and 800 series, this bus consists of control, clock and data lines. Because the system control CPU is the master while the other CPUs are slaves, all data is transmitted via the system control CPU.

8.3.2 JVC BUS

In the JVC bus, an independent control line (CS) runs between the system control's master CPU and each slave CPU while the same clock and data lines are used for all CPUs. How these lines are used to transfer data is described below.

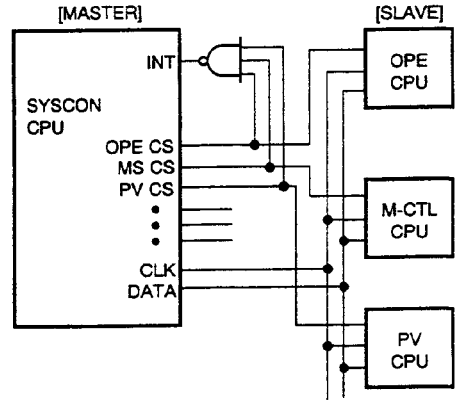

Fig. 8-3-2(a) JVC bus

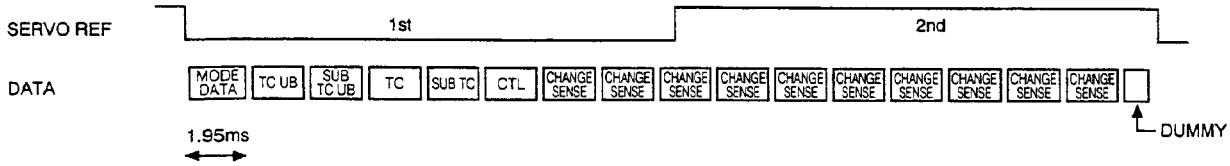

Fig. 8-3-2 (b) JVC bus basic transfer

(1) Data transfer from the system control CPU to the slave CPU

When transmitting data, the system control CPU first lowers the level of the slave CPU's control line (CS), then transfers the data and clock information. Basically, the system control CPU synchronizes with the servo reference signals, as shown in Fig. 8-3-2(b), and outputs commands such as mode data, time data, change sense command and dummy (which is not a command, but sets the control line to the low level). However, dummy is output only when the slave CPU requests permission for the last change sense command.

(2) Data transfer from the slave CPU to the system control CPU

Slave CPUs must receive permission from the system control CPU before they can transfer data to it.

1) The system control CPU outputs the change sense command to the slave CPUs and asks if there's any data to be transferred.
2) Slave CPUs with data to transfer request permission by briefly lowering the control line level and waiting for permission from the system control CPU.
3) The system control CPU assigns priorities to the slave CPUs requesting permission to transfer data and lowers the control line level of the slave CPU with the highest priority.
4) The designated slave CPU outputs data and clock information to the system control CPU.

(3) Time data transfer

The timecode data (SUB TC UB, TC UB, SUB TC, TC) consists of a total of 5 bytes. The first byte indicates the type of timecode data (e.g.: E1 [H] shows VITC DATA) and the next 4 bytes consists of the time data itself. When these commands are output, the system control CPU outputs the first 1 byte only. The 4-byte timecode data is output by either the PV CPU (subcode time data or internal timecode data) or the TC CPU (external timecode data). The PV CPU controls which timecode data is used. When L: TIME TC signal's level is lowered, the TC CPU outputs the data.

8.3.3 CPU FUNCTION SHARING

(1) System control CPU

1) Mode switching control
2) JVC bus control
3) RS-232C control
4) Partial video system control for part of video system (acquisition of genlock information and on-screen circuit for MONITOR OUT during warning indication)
5) Wide aspect ID control
6) CTL counter function
7) EEPROM control

(2) Operation CPU

1) Key switch information transmission
2) Controls LED display and tape counter
3) Search/jog dial data decoding
4) Meter control
5) On-screen circuit control
6) Acquisition of REC LEVEL VR and TRACKING VR data
7) Menu switch control
8) EEPROM control

(3) Mechanism control CPU

1) Drum, capstan and reel motor control
2) Mode motor, cassette motor and solenoid control
3) Warning detection
4) EEPROM control

(4) Audio CPU

1) Audio circuit mode control
2) DSP (Digital Sound Processor) control
3) Controls data transmission/reception with serial digital interface circuit (SA-D80U/D50U)
4) A-D converter and D-A converter control
5) Switching and setting of input/output mode and input/output signal
6) Automatic adjustment circuit control
7) Self-diagnosis function
8) EEPROM control

(5) TC CPU

1) Reader function for external LTC signals
2) LTC generator function
3) Controls VITC reader and generator
4) Outputs external timecode data information to JVC bus

Unlike other formats, DIGITAL S does not record time data or user bit information as the LTC or VITC; instead this data is recorded in the subcode sector. Data recorded here is not controlled by the TC CPU. The TC CPU converts internal time data for output to external equipment to LTC or VITC data or reads incoming timecode data to genlock the internal time data with LTC or VITC.

(6) RF CPU
1) Controls the optimum recording current adjustment circuit
2) Switches playback equalizer modes and sets equalizer control voltage in the Slow/Search mode.
3) EEPROM control

(7) 9-PIN CPU
1) Controls RS-422A

(8) PV CPU (PB side)
1) Controls digital video processing circuit (DCI, ECC, AUDIO, SHUFFLE, VLC, DCT)
2) Controls data transmission/reception with serial digital interface circuit (SA-D80U/D50U)
3) Controls TBC CPU, PV CPU (REC side)
4) Outputs internal timecode information to JVC bus. Controls TC CPU by determining whether internal or external timecode should be output to the JVC bus.

(9) PV CPU (REC side)
1) Controls digital video processing circuit (DCI, ECC, AUDIO, SHUFFLE, VLC, DCT)

(10) TBC CPU
1) Controls MMU (Memory Management Unit)

8.3.4 EEPROM MEMORY DATA

Each CPU stores the following data in EEPROM. (Electrically Erasable and Programmable ROM)

(1) EEPROM for System control CPU
1) Warning mode history
2) Serial No. (can be written via RS-232C)

(2) EEPROM for Operation CPU
1) Contents of menu switch settings
2) Sets data for adjustment of the following items
   a) Y timing (test mode: 7B)
   b) Composite C timing (test mode: 7D)
   c) Component C timing (test mode: 7C)
   d) Tracking meter preset (test mode: 84)
   e) Tracking VR preset (test mode: 85)

(3) EEPROM for Mechanism control CPU
1) Hour meter information
2) Sets data for adjustment of the following items
   a) Reel motor and capstan motor FG duty adjustment data (test mode: 5D)
   b) Tape tension and reel motor torque adjustment data (test mode: 5F, 60, 61, 62)
   c) Switching point adjustment data (test mode: 64)
   d) X value compensation data (test mode: 68)

(4) EEPROM for RF CPU
   a) Recording current adjustment data (test mode: 72)

(5) EEPROM for Audio CPU
   a) Audio system adjustment data (test mode: 50)

8.3.5 DRUM SERVO CIRCUIT

(1) Outline

In the DIGITAL S format, 1-frame information is divided into 10 tracks. Because dual heads are used to record and play back this information, the drum motor rotates at 75 Hz — 2.5 times the rpm of the VHS format. The IC2 M-CTL CPU on the M-CTL/SV board controls the rotating speed and the rotating phase.

[Rotating phase control]

Reference signal	TSR (75 Hz)
Comparative signal	HIDP (75 Hz)

[Rotating speed control]

Maintains the DRUM FG frequency at 2100 Hz.

TSR signal: Switch reference signal generated in the IC31 DCI-PB.

HIDP signal: Like a VHS format DRUM FF signal, this signal is based on DRUM PG (75 Hz) and used as information of the heads' rotating position. The signal level becomes high level when the CH1 head-pair contacts the tape and becomes low level when the CH2 head-pair contacts the tape.

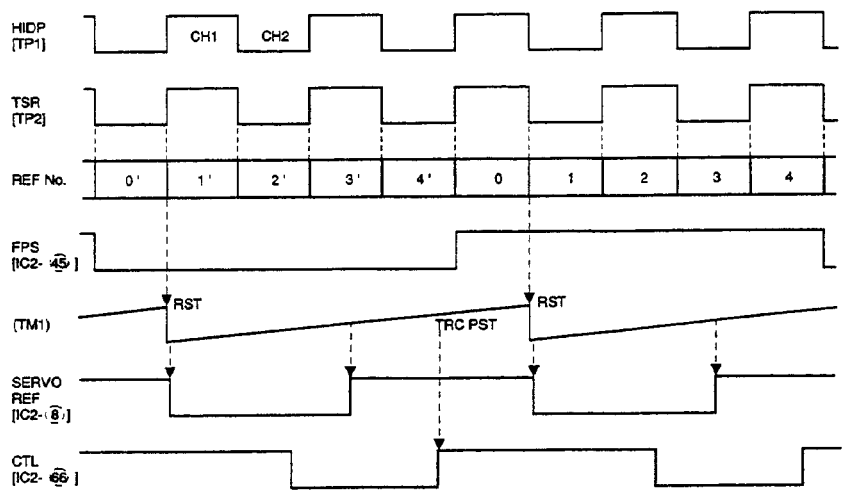

Fig. 8-3-5(a) Servo circuit timing chart

(2) Reference signal selection

The TSR signal used as a reference for the drum rotating phase control is based on the field pulse (IN F or REF F) and the H sync (IN H or REF H) generated from input signals as shown in Fig. 8-3-5 (b).

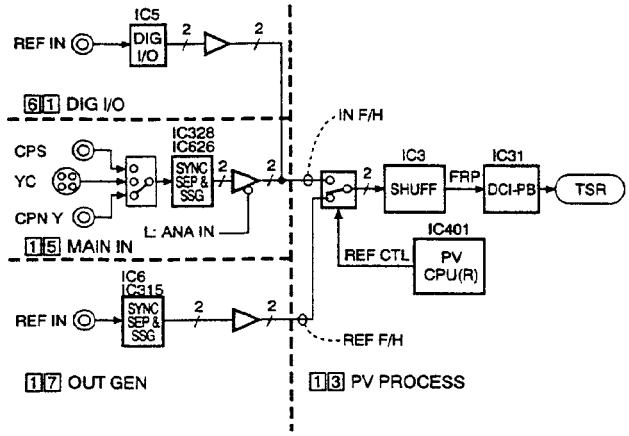

Fig. 8-3-5 (b) TSR generator

The PV CPU controls switching between IN F/H and REF F/H. IN F/H is selected during recording and REF F/H is selected during playback except in the following cases.

1) When no video signals are input, REF F/H is selected.
2) When the editing mode is selected, IN F/H is selected.
3) When menu switch No. 111 REC SIGNAL SELECT is set to INTERNAL COLOR BAR, REF F/H is selected.

(3) Switching point adjustment (test mode No. 64 SW POINT)

This sets the HIDP signal's H/L level switching point (heads' rotating position information) to the position determined for the format. At this time, the M-CTL CPU makes the adjustment so that the HIDP's polarity changes with the fixed time delay, using the recording position of ITI signals on the alignment tape (pin 56 SPAP signal) as reference. The SPAP signal contains information on the position of the ITI signals separated from the output of the preceding playback head.

8.3.6 CAPSTAN SERVO CIRCUIT

(1) Outline

The capstan servo circuit controls the capstan motor's rotating speed and rotating phase to match tracking in the Play mode.

[Rotating phase control]
Reference signal:
Comparative signal: Playback CTL signal
(Refer to Fig. 8-3-5 (a).)

[Rotating speed control]
Maintains the capstan FG's frequency at approx. 3.7 kHz.

During the auto tracking operation, the M-CTL CPU adjusts the capstan motor's rotating phase as required to obtain the maximum RF level.

(2) Auto tracking circuit

1) Tracking set position
During auto tracking operation, the M-CTL CPU checks the RF level at three drum positions (inlet, center, outlet) by changing the tracking. The RF level at each position changes as shown in Fig. 8-3-6 (b) and the CPU sets tracking to the position in this figure.

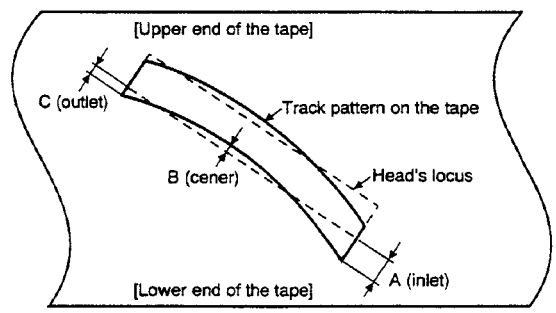

Fig. 8-3-6 (a) Track pattern and head locus

REC head tracking accuracy is essential during editing in the DIGITAL S format. This circuit adjusts the tracking of the REC (succeeding) heads. (However, during recording current adjustment, PB head tracking is adjusted for the editing VCR as well.)
Since no editing function is provided with playback-only VCRs and the PB head width is wider than the track width, it is only necessary to obtain a playback picture. Tracking adjustment is performed simply by setting the tracking one position before the position where no change is seen in the RF level when tracking is changed (4.5 μm step).

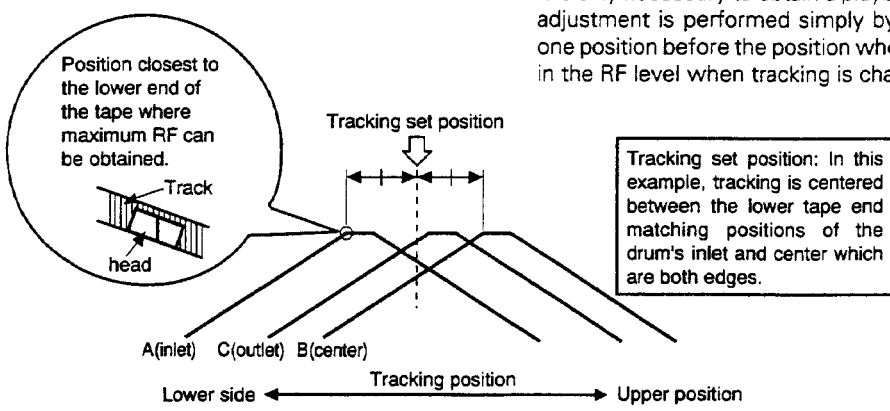

Fig. 8-3-6 (b) Tracking set position

2) Operation timing

Auto tracking operates in the following cases.

a) When the power is turned on or when the Play mode is first engaged.
b) When the track number is shifted during playback.
c) When menu switch No. 005 AUTO TRACKING is switched from OFF to ON
d) When the RF level falls below 75% for 2 seconds or more during playback

3) RF level detection

During auto tracking operation, the CPU acquires the voltage sampling of the ITI signal's RF level from pin 73. In the CPU, using the average of the CH1 head and CH2 head outputs voltages at the inlet, center and outlet, the tracking best position is searched.

ITR: Playback RF output from the REC succeeding head
TR: Playback RF output from the PB succeeding head
SPAR: Position information of ITI signals obtained from the REC preceding head output.
SPAP: Position information of ITI signals obtained from the PB preceding head output.

The CPU acquires the integrated RF signals from pin 74. These signals are not for auto tracking, but are used to measure the X-value shifting when executing the test mode 68 TRACKING.

4) Track number adjustment

Because data for one frame is divided into 5 track pairs for recording in the DIGITAL S format, the order in which track numbers are played back in the Play mode is determined as shown in Fig. 8-3-5 (a). (In Cue Search, a playback picture can be obtained even if the order is changed because Cue Search operates in the Special playback mode.)
When the tracking position is set with auto tracking, the track number obtained from playback signals is checked against the regular track pair number. If the track numbers do not correspond, the tracking position is corrected.

a) The difference between the reference track number obtained from FPS and TSR and the track number (detected from TRP 0 to 2 sent from DCI-P) obtained from playback signal.
b) When this difference is the same five times consecutively, tracking is adjusted.

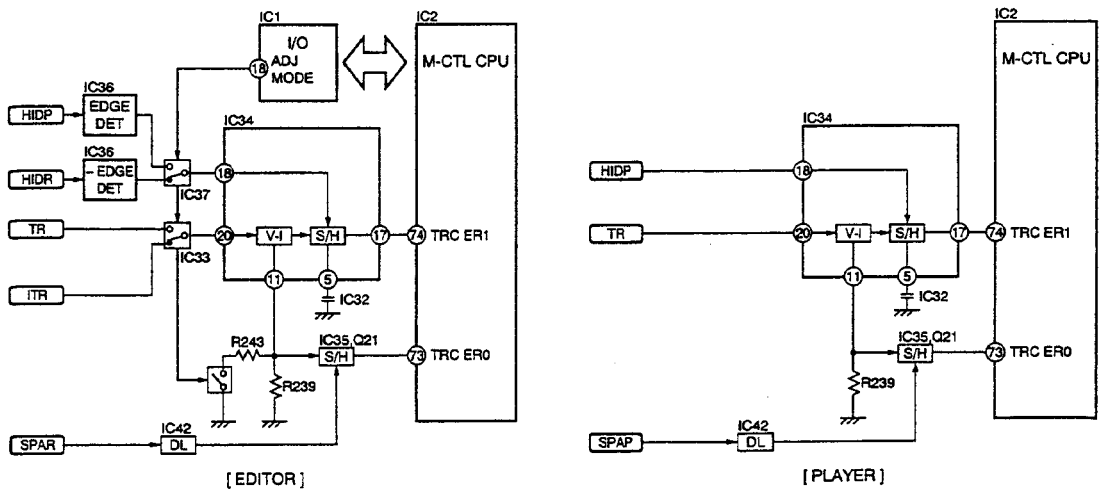

Fig. 8-3-6(c) RF level detect circuit

8.4 GENERAL SIGNAL FLOW

This board handles serial data both for video and audio.
Video; SMPTE 259M SDI component video signal
Audio; AES/EBU digital audio signal

(1) INPUT

SDI digital signal, fed from the BNC connector, comes in through a special coaxial connector CN3 mounted near the top edge of the board.Then the signal is processed to the form of parallel digital data which flows out through the card edge connector CN1 as the recording signal source.
AES/EBU digital audio signal, on the other hand, comes in through CN201 in the same manner, and then converted to the different format, but still in serial, then divided to two channel signal lines and flow out through CN2.

(2) OUTPUT

Play back or EE video signal comes through CN1 then goes out fromCN4 after converted to the form of SDI serial digital format.Play back or EE audio signal also comes through CN2 and goes out from CN202 after being converted to AES/EBU format.

8.5 INCOMING SECTION OF VIDEO RECORDING BLOCK

The first stage is conformed with three IC chips IC1 GS9005A, IC2 GS9000 and IC3 GS9010A. This group of IC's converts SDI signal into parallel digital by using the PLL function.See the block diagram for the inside block of these IC's.SDI signal comes in from pin 8 of IC1, going through the CABLE EQUALIZER block in order to eliminate jittering and DC fluctuation occurring through the cable transmission.Main data stream goes through the Latch and stable signal appears at pins 24 and 25.
Other path is to extract the clock signal which is done with VCOand Phase comparator inside this chip and comes out of pins 22 and 23.Data and Clock are now fed to the second chip IC2 and goes through the Descrambler and decoded to the parallel format, while PCLK of 27MHz comes out of pin16. Then those are fed to the second stage.
Back to the first stage, there are a few explanation of the chipset. CARDET carrier detection out from IC1 stays normally L when it receive a serial data correctly. If the signal is interrupted for a certain period of time, this lines goes H and trigger the VCO sweep function in the IC3. The DC voltage coming out of pin2 of IC3 start changing as saw tooth wave. IC1 receiving this voltage at pin 17, R3, it scan the frequency of the VCO trying to catch a hold of the incoming serial data. Once after the serial data stream is locked, then HSYNC with square wave comes out of IC2 and comes to IC3 at pin 13. It stops the voltage sweeping and the frequency stays at this point. The HSYNC signal comes out when the TRS, timing reference signal, is detected from the data stream within IC3. The rate of HSYNC is equal to horizontal scan rate in case of component signal while it is half the horizontal in case of composite signal.
Even after the PLL frequency stays, automatic fine tuning system which formed by Loop Filter out put of IC1 pin12 "LF", applying to IC2 at pin 5, works to center the VCO via "OUT" pin 2 of IC2 to R3 in IC1.
"SWF", Sync Warning Flag, pin 3 out of IC2 becomes active H when it detect the higher error rate than predetermined level by "SWFC" pin 15 with RC constant connected outside. This signal controls IC3 at pin 8, gating the HSYNC within the IC3. The purpose of this line is to stabilize the detection performance from the disturbances such as noise from outside or at power on. f/2 out put at pin 6 of IC3, it is L when detecting component and H when composite. This controls f/2 input of IC1 at pin10 to enable the VCO frequency at 540 MHz, twice the normal rate of 270 MHz, for optimizing the jitter.

8.6 JCL0032 PROCESS IN VIDEO RECORDING BLOCK

The parallel data stream coming in from pins 45 through 52 of IC5, goes through TRS decoder where the TRS signals are separated. Out of TRS signal, DIF and DIH signals are obtained and sent out from pins 15 and 13. DIH goes low during the active horizontal period. DIF goes low during active first field duration. Those signals goes through buffers and being sent out to mother board together with main data stream, the final destination is PV PROCESS circuit. Main data stream goes through clock buffer to be stabilized more accurately with re-generated 27 MHz by IC4 which is applied through pin 24 SYSCK.
Then the multiplexer sends out two digital data streams.
The main stream with Y and C signal multiplexed, and the onother stream with only Y information for detecting the VITC. Besides main signal processing, Timing Generator generates HD and VD signals sending out at pins 97 and 96. Also Error Detector block sends out ERROR at pin 95, LOCKH at pin 85, LSTD at pin 17.LOCKH, stays H normally as long as line standard detection is correctly done. LSTD, Line Standard detection flag indicates the incoming SDI video system whether it is 525 or 625.

8.7 OUTPUT SECTION OF RECORDING BLOCK

Sub data stream for VITC coming out of IC5 pins 149 through 156, is instantly D/A converted with IC8 to get analog Y signal. It is sent to SYSCON to separate the VITC information later. Main data stream goes to the line buffers, IC11 through IC14 via a small gate array IC26.
This IC simply blank the signal appearing at H-BLANKING area when Y/C delay is offset during adjustment. The line buffers provides two streams, VREC* and VPB/EE*.
Those data are sent out to the Mother Board-1 through CN1 where to meet the same data bus running from other circuit boards. Pins 12 of these buffers are used to avoid conflict with other signals at Mother Board-1 by keeping output in high impedance when the EN2 control signal is H.

8.8 OTHER SIGNALS IN VIDEO RECORDING BLOCK

HSYNC coming out of IC2 is not only used in IC3, but also used to detect the status of SDI signal presence, L:NO_DIN.
IC17 monostable multivibrator is kept re-triggered by HSYNC as long as it is active, and Q pin13 keeps H. It goes L when HSYNC stops coming.
In addition to this, ERROR, LOCKH, LSTD and ILLEGAL_STD, total 5 bit of the status information is fed to the shift register drawn in the playback block of schematic diagram.

8.9 VIDEO PLAYBACK BLOCK

Play back signal data stream is given from mother board via card edge connector CN1. Playback clock 27 MHz is also given from CN1. It is originally from OUT GEN BOARD.
Both data and clock goes through the buffers IC18, IC19 and IC20, and goes in to IC21 JCL0031. See the block diagram for inside process. Parallel digital data stream goes through Delay

Buffer which is controlled by 5 digit control data given from OUT MEM circuit. Then the TRS ID is added to the main data and coming out of pins 45 through 52.
IC22 GS9002 is converting parallel data to the SMPTE 259M serial digital data. Within this IC, the 27MHz clock is divided to 270MHz clock, and used for serial conversion. Serial data comes out from pins 38 and 39 after going through the SCRAMBLER.
IC23 GS9007 is line buffer sending out the final serial data out from pin 1, then to the special connector CN4.

8.10 OTHER CIRCUIT IN VIEO PLAYBACK BLOCK

IC21 status information ERROR, LSTD and LOCKH are sent out to PV PROCESS BOARD together with status given from recording block, ERROR, LOCKH, LSTD, ILLEGAL_STD and NO_DIN. These status of 8 bit data are fed to IC24 TC74HC165 in parallel, and sent out in serial data from pin 9, by the clock and S/P signal coming from PV PROCESS.

8.11 AUDIO RECORDING BLOCK

AES/EBU incoming signal comes in from the special connector CN202. It goes through IC202 MC34050 EIA422/423 Transceiver, dual transmitter buffers and receiver buffers.
The signal goes to IC201 at pin 37. YM3436D is AES/EBU DECODER chip. See the block diagram for inside block.
AES/EBU decoding block with PLL converts the data to the pure serial digital audio signal at pin 3.
MCA, master clock of 256 fs comes out of pin 10. Other pulses are generated counting down MCA within Timing generator.
MCC, bit clock of 64 fs at pin 7. WC, word clock of fs at pin 8.
OPT, fs frequency but different phase from WC at pin 5.
CDO, CCK, CLD; These are a set of serial port to sends out information obtained inside the chip, such as PLL lock status, parity check status, Channel Status 31 bits data, users bits, and so on. These lines are connected via mother board to microprocessor in DIG AUDIO board. CDO is the serial data line out, while CCK is given clock and CLD is given timing signal both from the microprocessor.
The main stream coming out of DOUT pin, now goes through a gate IC206.4, a simple NAND gate. At the another input of this NAND gate, there are group of NAND gates and INVERTERs. These can be expressed just to one EXCLUSIVE OR gate having two inputs connected to WC and OPT.
The purpose of this gating is to extract only 16 bits, masking lower 8 bits out of the original 24 bits data stream.
The out put of the inverter now goes into IC205 TC74HC4053, triple analog switches. The signal is connected to 0X and 1Y, leaving other inputs to GND. Switching signal is from WC and it selects XCOM and YCOM in the same time. The simple data stream is now divided to two channel streams in this way, and are sent out to the PV PROCESS board after buffered by IC208.
WC is buffered and sent out as DAI LRCK together, as well as MC is sent out as DAI MCK. Out of the main stream before separation, another line goes through buffer IC211.1 and sent out from CN2, but the destination is DIGITAL AUDIO. It is used as EE sound source.

8.12 PLAYBACK BLOCK OF DIGITAL AUDIO

Playback digital data is coming from CN2 as DAO DAT fed to IC204 at pin 7. YM3437C is AES/EBU signal modulator. The main data is converted to AES/EBU form within this chip, on the other hand, other information coming through CLD, CIN and CCK are also converted to the AES/EBU form and multiplexed with the main data line. Finally it goes through Bi-phase modulator and coming out at pin 16, then buffer of IC202, transmit driver IC212 and connector CN202.